DAIKIN

SiMT341407E

R-410A

Service Manual

VRV IV

Heat Pump R410A 50Hz

High-COP Type RXYQ12-50THY1(E)
Standard Type RXYQ6-60T(N)Y1(E)
Space Saving Type RXYQ18-50T(S)Y1(E)

VRV IV
Heat Pump
R410A 50Hz

ED Reference

For items below, please refer to Engineering Data.

No.	Item	ED No.	Page	Remarks
1	Specification – Indoor Unit	EDMT341324B	P. 42-43, 58-59, 74-75, 92, 104-105, 124, 138-139, 162-164, 190, 204, 218-219, 234-237, 256-257, 290, 312-318	
2	Specification – Outdoor Unit	EDMT341324B	P. 374-383, 468-481, 632-640	
3	Piping Diagram	EDMT341324B	P. 492-493, 648	
4	Option List	EDMT341324B	P. 56, 72, 90, 101, 121, 136, 159, 188, 201, 216, 231, 253, 282, 308, 350-351, 465, 629, 726, 802-803	

1. Introduction v
   1.1 Safety Cautions v
   1.2 Used Icons x

Part 1 General Information 1

1. Model Names of Indoor/Outdoor Units 2
   1.1 Indoor Units 2
   1.2 Outdoor Units 3
   1.3 Air Treatment Equipment 5
2. External Appearance 6
   2.1 Indoor Units 6
   2.2 Outdoor Units 8
   2.3 Air Treatment Equipment 10
3. Combination of Outdoor Units 11
4. Capacity Range 13
   4.1 Capacity Range for *VRV* Indoor Units Only 13
   4.2 Capacity Range for Mixed Combination of *VRV* and Residential Indoor Units 18

Part 2 Refrigerant Circuit 20

1. Refrigerant Circuit (Piping Diagrams) 21
   1.1 RXYQ6/8/10/12TY1 21
   1.2 RXYQ14/16/18/20TY1 23
   1.3 Outdoor–Air Processing Unit FXMQ125MFV1~250MFV1 25
2. Functional Parts Layout 26

2.1 RXYQ6/8TY1 26
2.2 RXYQ10/12TY1 27
2.3 RXYQ14/16/18TY1 28
2.4 RXYQ20TY1 29
3. Refrigerant Flow for Each Operation Mode 30
3.1 RXYQ6/8/10/12TY1 30
3.2 RXYQ14/16/18/20TY1 34

Part 3 Remote Controller 38

1. Wired Remote Controller 39
1.1 Applicable Models 39
1.2 Names and Functions 39
1.3 MAIN/SUB Setting when Using 2 Remote Controllers 43
1.4 Centralized Control Group No. Setting 44
2. Wireless Remote Controller 46
2.1 Applicable Models 46
2.2 Names and Functions 46
2.3 Address and MAIN/SUB Setting 48
2.4 Centralized Control Group No. Setting 50
3. Service Mode 51
3.1 BRC1C61/BRC1C62 51
3.2 BRC1E62 53

Part 4 Function and Control 56

1. Functions 57
1.1 Stop Control 58
1.2 Standby Control 58
1.3 Startup Control 59
1.4 Normal Operation 60
1.5 Protection Control 64
1.6 Special Control 67

Part 5 Field Settings 71

1. Test Operation 72
1.1 Test Operation Checks 72
2. Field Setting from Remote Controller 73
2.1 Wired Remote Controller 73
2.2 Wireless Remote Controller 75
2.3 Simplified Remote Controller 76
2.4 Setting Contents and Code No. for Indoor Units 77
3. List of Field Setting Items 90
3.1 Function Setting 90
3.2 Service Setting 92
3.3 Settings by DIP Switches 93
3.4 DIP Switch Setting Mounting a Spare PCB 93
4. Settings by BS Buttons 95
4.1 Normal Mode 96
4.2 Setting Mode (= Mode 2) 98
4.3 Monitor Mode 103

5. Procedure and Outline 127
5.1 Check Work Prior to Turn Power Supply ON 127
5.2 Turn Power ON 128
5.3 Charging Refrigerant 129

Part 6 Service Diagnosis.....134

1. Symptom-based Troubleshooting 136
2. Troubleshooting by Remote Controller 139
2.1 Mode Access Operation 139
2.2 Procedure of Self-diagnosis by Remote Controller 141
2.3 Error Code and Description 145
2.4 Error Codes - Sub Codes 146
3. Troubleshooting by Indication on the Remote Controller 147
3.1 PCB Abnormality 147
3.2 Detection of Earth Leakage by Leak Detection PCB Assy 148
3.3 Missing of Earth Leakage Detection Core 149
3.4 Actuation of High Pressure Switch 150
3.5 Actuation of Low Pressure Sensor 152
3.6 INV. Compressor Motor Lock 154
3.7 Compressor Damage Alarm 156
3.8 Outdoor Unit Fan Motor Abnormality 158
3.9 Electronic Expansion Valve Coil Abnormality 161
3.10 Discharge Pipe Temperature Abnormality 162
3.11 Wet Alarm 164
3.12 Refrigerant Overcharged 165
3.13 Harness Abnormality (between Control PCB and Inverter PCB) 166
3.14 Outdoor Unit Fan Motor Signal Abnormality 167
3.15 Thermistor Abnormality 169
3.16 High Pressure Sensor Abnormality 171
3.17 Low Pressure Sensor Abnormality 172
3.18 Inverter PCB Abnormality 173
3.19 Reactor Temperature Rise Abnormality 175
3.20 Inverter Radiation Fin Temperature Rise Abnormality 176
3.21 INV. Compressor Instantaneous Overcurrent 177
3.22 INV. Compressor Overcurrent 179
3.23 INV. Compressor Startup Abnormality 181
3.24 Transmission Error between Inverter and Control PCB 184
3.25 Power Supply Voltage Imbalance 186
3.26 Reactor Temperature Abnormality 188
3.27 Inverter Radiation Fin Temperature Abnormality 189
3.28 Field Setting after Replacing Outdoor Unit Main PCB Abnormality or Combination of PCB Abnormality 190
3.29 Refrigerant Shortage 191
3.30 Reverse Phase, Open Phase 192
3.31 Power Supply Insufficient or Instantaneous Abnormality 193
3.32 Check Operation is not Executed 195
3.33 Transmission Error between Indoor Units and Outdoor Units 196
3.34 Transmission Error between Remote Controller and Indoor Unit 199
3.35 Transmission Error between Outdoor Units 200
3.36 Transmission Error between Main and Sub Remote Controllers 206

3.37 Transmission Error between Indoor and Outdoor Units in the Same System 207
3.38 Improper Combination of Indoor and Outdoor Units, Indoor Units and Remote Controller.....208
3.39 Address Duplication of Centralized Control Equipment 211
3.40 Transmission Error between Centralized Control Equipment and Indoor Unit.....212
3.41 System is not Set yet.....214
3.42 System Abnormality, Refrigerant System Address Undefined.....215
3.43 Check 217

Part 7 Appendix.....227

1. Wiring Diagrams.....228
1.1 Outdoor Unit 228

1. Introduction

1.1 Safety Cautions

Be sure to read the following safety cautions before conducting repair work.
After the repair work is complete, be sure to conduct a test operation to ensure that the equipment operates normally, and explain the cautions for operating the product to the customer.

Caution Items

The caution items are classified into ⚠ **Warning** and ⚠ **Caution**. The ⚠ **Warning** items are especially important since they can lead to death or serious injury if they are not followed closely. The ⚠ **Caution** items can also lead to serious accidents under some conditions if they are not followed. Therefore, be sure to observe all the safety caution items described below.

Pictograms

△ This symbol indicates the item for which caution must be exercised.
The pictogram shows the item to which attention must be paid.

◯ This symbol indicates the prohibited action.
The prohibited item or action is shown in the illustration or near the symbol.

● This symbol indicates the action that must be taken, or the instruction.
The instruction is shown in the illustration or near the symbol.

1.1.1 Warnings and Cautions Regarding Safety of Workers

⚠ Warning	
Do not store the equipment in a room with successive fire sources (e.g., naked flame, gas appliance, electric heater).	
Be sure to disconnect the power cable plug from the plug socket before disassembling the equipment for repair. Working on the equipment that is connected to the power supply may cause an electrical shock. If it is necessary to supply power to the equipment to conduct the repair or inspecting the circuits, do not touch any electrically charged sections of the equipment.	
If the refrigerant gas is discharged during the repair work, do not touch the discharged refrigerant gas. The refrigerant gas may cause frostbite.	
When disconnecting the suction or discharge pipe of the compressor at the welded section, evacuate the refrigerant gas completely at a well-ventilated place first. If there is gas remaining inside the compressor, the refrigerant gas or refrigerating machine oil discharges when the pipe is disconnected, and it may cause injury.	
If the refrigerant gas leaks during the repair work, ventilate the area. The refrigerant gas may generate toxic gases when it contacts flames.	
Be sure to discharge the capacitor completely before conducting repair work. The step-up capacitor supplies high-voltage electricity to the electrical components of the outdoor unit. A charged capacitor may cause an electrical shock.	

Warning	
Do not start or stop the air conditioner operation by plugging or unplugging the power cable plug. Plugging or unplugging the power cable plug to operate the equipment may cause an electrical shock or fire.	
Be sure to wear a safety helmet, gloves, and a safety belt when working at a high place (more than 2 m). Insufficient safety measures may cause a fall accident.	
In case of R410A refrigerant models, be sure to use pipes, flare nuts and tools for the exclusive use of the R410A refrigerant. The use of materials for R22 refrigerant models may cause a serious accident such as a damage of refrigerant cycle as well as an equipment failure.	
Do not mix air or gas other than the specified refrigerant (R410A / R22) in the refrigerant system. If air enters the refrigerating system, an excessively high pressure results, causing equipment damage and injury.	

Caution	
Do not repair the electrical components with wet hands. Working on the equipment with wet hands may cause an electrical shock.	
Do not clean the air conditioner by splashing water. Washing the unit with water may cause an electrical shock.	
Be sure to provide the grounding when repairing the equipment in a humid or wet place, to avoid electrical shocks.	
Be sure to turn off the power switch and unplug the power cable when cleaning the equipment. The internal fan rotates at a high speed, and may cause injury.	
Be sure to conduct repair work with appropriate tools. The use of inappropriate tools may cause injury.	
Be sure to check that the refrigerating cycle section has cooled down enough before conducting repair work. Working on the unit when the refrigerating cycle section is hot may cause burns.	

Caution	
Use the welder in a well-ventilated place. Using the welder in an enclosed room may cause oxygen deficiency.	

1.1.2 Warnings and Cautions Regarding Safety of Users

Warning	
Do not store the equipment in a room with successive fire sources (e.g., naked flame, gas appliance, electric heater).	
Be sure to use parts listed in the service parts list of the applicable model and appropriate tools to conduct repair work. Never attempt to modify the equipment. The use of inappropriate parts or tools may cause an electrical shock, excessive heat generation or fire.	
If the power cable and lead wires have scratches or deteriorated, be sure to replace them. Damaged cable and wires may cause an electrical shock, excessive heat generation or fire.	
Do not use a joined power cable or extension cable, or share the same power outlet with other electrical appliances, since it may cause an electrical shock, excessive heat generation or fire.	
Be sure to use an exclusive power circuit for the equipment, and follow the local technical standards related to the electrical equipment, the internal wiring regulations, and the instruction manual for installation when conducting electrical work. Insufficient power circuit capacity and improper electrical work may cause an electrical shock or fire.	
Be sure to use the specified cable for wiring between the indoor and outdoor units. Make the connections securely and route the cable properly so that there is no force pulling the cable at the connection terminals. Improper connections may cause excessive heat generation or fire.	
When wiring between the indoor and outdoor units, make sure that the terminal cover does not lift off or dismount because of the cable. If the cover is not mounted properly, the terminal connection section may cause an electrical shock, excessive heat generation or fire.	
Do not damage or modify the power cable. Damaged or modified power cable may cause an electrical shock or fire. Placing heavy items on the power cable, and heating or pulling the power cable may damage the cable.	

Warning	
Do not mix air or gas other than the specified refrigerant (R410A / R22) in the refrigerant system. If air enters the refrigerating system, an excessively high pressure results, causing equipment damage and injury.	
If the refrigerant gas leaks, be sure to locate the leaking point and repair it before charging the refrigerant. After charging refrigerant, make sure that there is no refrigerant leak. If the leaking point cannot be located and the repair work must be stopped, be sure to perform pump-down and close the service valve, to prevent the refrigerant gas from leaking into the room. The refrigerant gas itself is harmless, but it may generate toxic gases when it contacts flames, such as fan and other heaters, stoves and ranges.	
When relocating the equipment, make sure that the new installation site has sufficient strength to withstand the weight of the equipment. If the installation site does not have sufficient strength and if the installation work is not conducted securely, the equipment may fall and cause injury.	
Check to make sure that the power cable plug is not dirty or loose, then insert the plug into a power outlet securely. If the plug has dust or loose connection, it may cause an electrical shock or fire.	
Be sure to install the product correctly by using the provided standard installation frame. Incorrect use of the installation frame and improper installation may cause the equipment to fall, resulting in injury.	For unitary type only
Be sure to install the product securely in the installation frame mounted on the window frame. If the unit is not securely mounted, it may fall and cause injury.	For unitary type only
When replacing the coin battery in the remote controller, be sure to dispose of the old battery to prevent children from swallowing it. If a child swallows the coin battery, see a doctor immediately.	

Caution	
Installation of a leakage breaker is necessary in some cases depending on the conditions of the installation site, to prevent electrical shocks.	
Do not install the equipment in a place where there is a possibility of combustible gas leaks. If the combustible gas leaks and remains around the unit, it may cause a fire.	

Caution	
Check to see if the parts and wires are mounted and connected properly, and if the connections at the soldered or crimped terminals are secure. Improper installation and connections may cause excessive heat generation, fire or an electrical shock.	
If the installation platform or frame has corroded, replace it. Corroded installation platform or frame may cause the unit to fall, resulting in injury.	
Check the grounding, and repair it if the equipment is not properly grounded. Improper grounding may cause an electrical shock.	
Be sure to measure the insulation resistance after the repair, and make sure that the resistance is 1 MΩ or higher. Faulty insulation may cause an electrical shock.	
Be sure to check the drainage of the indoor unit after the repair. Faulty drainage may cause the water to enter the room and wet the furniture and floor.	
Do not tilt the unit when removing it. The water inside the unit may spill and wet the furniture and floor.	
Be sure to install the packing and seal on the installation frame properly. If the packing and seal are not installed properly, water may enter the room and wet the furniture and floor.	For unitary type only

1.2 Used Icons

The following icons are used to attract the attention of the reader to specific information.

Icon	Type of Information	Description
Warning	Warning	A **Warning** is used when there is danger of personal injury.
Caution	Caution	A **Caution** is used when there is danger that the reader, through incorrect manipulation, may damage equipment, loose data, get an unexpected result or has to restart (part of) a procedure.
Note:	Note	A **Note** provides information that is not indispensable, but may nevertheless be valuable to the reader, such as tips and tricks.
	Reference	A **Reference** guides the reader to other places in this binder or in this manual, where he/she will find additional information on a specific topic.

Part 1
General Information

1. Model Names of Indoor/Outdoor Units....2
   1.1 Indoor Units....2
   1.2 Outdoor Units....3
   1.3 Air Treatment Equipment....5
2. External Appearance....6
   2.1 Indoor Units....6
   2.2 Outdoor Units....8
   2.3 Air Treatment Equipment....10
3. Combination of Outdoor Units....11
4. Capacity Range....13
   4.1 Capacity Range for *VRV* Indoor Units Only....13
   4.2 Capacity Range for Mixed Combination of *VRV* and Residential Indoor Units....18

1. Model Names of Indoor/Outdoor Units

1.1 Indoor Units

VRV Indoor Units

Capacity range		2.2kW	2.8kW	3.6kW	4.5kW	5.6kW	7.1kW	8.0kW	9.0kW	11.2kW	14.0kW	16.0kW	22.4kW	28.0kW	45.0kW	56.0kW	Power supply, Standard
		0.8HP	1HP	1.25HP	1.6HP	2HP	2.5HP	3HP	3.2HP	4HP	5HP	6HP	8HP	10HP	16HP	20HP	
Capacity index		20	25	31.25	40	50	62.5	71	80	100	125	140	200	250	400	500	
Ceiling Mounted Cassette (Round Flow with Sensing) Type	FXFQ	—	25S	32S	40S	50S	63S	—	80S	100S	125S	—	—	—	—	—	VM
Ceiling Mounted Cassette (Round Flow) Type	FXFQ	—	25LU	32LU	40LU	50LU	63LU	—	80LU	100LU	125LU	—	—	—	—	—	V1
Ceiling Mounted Cassette (Compact Multi Flow) Type	FXZQ	20M	25M	32M	40M	50M	—	—	—	—	—	—	—	—	—	—	VE
4-Way Flow Ceiling Suspended Type	FXUQ	—	—	—	—	—	—	71A	—	100A	—	—	—	—	—	—	VEB
Ceiling Mounted Cassette (Double Flow) Type	FXCQ	20M	25M	32M	40M	50M	63M	—	80M	—	125M	—	—	—	—	—	VE
Ceiling Mounted Cassette Corner Type	FXKQ	—	25MA	32MA	40MA	—	63MA	—	—	—	—	—	—	—	—	—	
Slim Ceiling Mounted Duct Type	FXDQ-PBVE	20PB	25PB	32PB	—	—	—	—	—	—	—	—	—	—	—	—	
	FXDQ-PBVET	20PB	25PB	32PB	—	—	—	—	—	—	—	—	—	—	—	—	
	FXDQ-NBVE	—	—	—	40NB	50NB	63NB	—	—	—	—	—	—	—	—	—	
	FXDQ-NBVET	—	—	—	40NB	50NB	63NB	—	—	—	—	—	—	—	—	—	
Ceiling Mounted Duct Type	FXMQ	20P	25P	32P	40P	50P	63P	—	80P	100P	125P	140P	—	—	—	—	
	FXMQ	—	—	—	—	—	—	—	—	—	—	—	200MA	250MA	—	—	
Ceiling Suspended Type	FXHQ	—	—	32MA	—	—	63MA	—	—	100MA	—	—	—	—	—	—	
Wall Mounted Type	FXAQ	20P	25P	32P	40P	50P	63P	—	—	—	—	—	—	—	—	—	
Floor Standing Type	FXLQ	20MA	25MA	32MA	40MA	50MA	63MA	—	—	—	—	—	—	—	—	—	
Concealed Floor Standing Type	FXNQ	20MA	25MA	32MA	40MA	50MA	63MA	—	—	—	—	—	—	—	—	—	
Floor Standing Duct Type	FXVQ	—	—	—	—	—	—	—	—	—	125M	—	200M	250M	400M	500M	Y1
		—	—	—	—	—	—	—	—	—	—	—	—	—	—	500M	Y16

Note: FXDQ has following 2 series, as shown below.
FXDQ-PBVET, NBVET: without a Drain Pump
FXDQ-PBVE, NBVE: with a Drain Pump

V1: 1 phase, 220-240V, 50Hz
VE: 1 phase, 220-240/220V, 50/60Hz
VM: 1 phase, 220-240/220-230V, 50/60Hz
Y1: 3 phase, 380-415V, 50Hz

Residential Indoor Units with Connection to BP Units

Capacity range		2.0kW	2.5kW	3.5kW	5.0kW	6.0kW	7.1kW	Power supply, Standard
Capacity index		20	25	35	50	60	71	
Ceiling Mounted Cassette Type	FCQ	—	—	35B	50B	60B	71B	VE
Ceiling Mounted Cassette (Compact Multi Flow) Type	FFQ	—	25B	35B	50B	60B	—	V1B
Ceiling Mounted Build-in Type	FBQ	—	—	—	—	60B	71B	V1
Slim Ceiling Mounted Duct Type	CDXS	—	25EA	35EA	—	—	—	VMA
	FDXS	—	25C	35C	50C	60C	—	
Wall Mounted Type	FTXS	20D	—	—	—	—	—	VMA
		—	25E	35E	—	—	—	
		—	—	—	50F	60F	71F	

Note: BP Units are necessary for residential indoor units.
Residential Indoor Units can be connected with only Single Outdoor Units.

V1: 1 phase, 220-240V, 50Hz
VE: 1 phase, 220-240/220V, 50/60Hz
VM: 1 phase, 220-240/220-230V, 50/60Hz

BP Units

Type		Model Name
BP Units	3 Ports	BPMKS967A3
	2 Ports	BPMKS967A2

1.2 Outdoor Units

High-COP Type

Series	Model Name											Power Supply
Heat Pump	RXYQ	12TH	14TH	16TH	18TH	20TH	22TH	24TH	26TH	28TH	30TH	Y1(E)
		32TH	34TH	36TH	38TH	40TH	42TH	44TH	46TH	48TH	50TH	

Standard Type

Series	Model Name											Power Supply
Heat Pump	RXYQ	6T	8T	10T	12T	14T	16T	18TN	20TN	22TN	24TN	Y1(E)
		26TN	28TN	30TN	32TN	34TN	36TN	38TN	40TN	42TN	44TN	
		46TN	48TN	50TN	52TN	54TN	56TN	58TN	60TN	—	—	

Space Saving Type

Series	Model Name											Power Supply
Heat Pump	RXYQ	18T	20T	22TS	24TS	26TS	28TS	30TS	32TS	34TS	36TS	Y1(E)
		38TS	40TS	42TS	44TS	46TS	48TS	50TS	—	—	—	

Y1: 3 phase, 380-415V, 50Hz
E: The unit with anti corrosion treatment

Combination of Outdoor Units (High-COP Type)

Capacity range	12HP	14HP	16HP	18HP	20HP	22HP	24HP	26HP
Model name	**RXYQ12TH**	**RXYQ14TH**	**RXYQ16TH**	**RXYQ18TH**	**RXYQ20TH**	**RXYQ22TH**	**RXYQ24TH**	**RXYQ26TH**
Outdoor unit 1	RXYQ6T	RXYQ6T	RXYQ8T	RXYQ6T	RXYQ6T	RXYQ6T	RXYQ8T	RXYQ8T
Outdoor unit 2	RXYQ6T	RXYQ8T	RXYQ8T	RXYQ6T	RXYQ6T	RXYQ8T	RXYQ8T	RXYQ8T
Outdoor unit 3	–	–	–	RXYQ6T	RXYQ8T	RXYQ8T	RXYQ8T	RXYQ10T

Capacity range	28HP	30HP	32HP	34HP	36HP	38HP	40HP	42HP
Model name	**RXYQ28TH**	**RXYQ30TH**	**RXYQ32TH**	**RXYQ34TH**	**RXYQ36TH**	**RXYQ38TH**	**RXYQ40TH**	**RXYQ42TH**
Outdoor unit 1	RXYQ8T	RXYQ8T	RXYQ8T	RXYQ8T	RXYQ8T	RXYQ12T	RXYQ12T	RXYQ14T
Outdoor unit 2	RXYQ8T	RXYQ10T	RXYQ12T	RXYQ12T	RXYQ14T	RXYQ12T	RXYQ14T	RXYQ14T
Outdoor unit 3	RXYQ12T	RXYQ12T	RXYQ12T	RXYQ14T	RXYQ14T	RXYQ14T	RXYQ14T	RXYQ14T

Capacity range	44HP	46HP	48HP	50HP
Model name	**RXYQ44TH**	**RXYQ46TH**	**RXYQ48TH**	**RXYQ50TH**
Outdoor unit 1	RXYQ14T	RXYQ14T	RXYQ16T	RXYQ16T
Outdoor unit 2	RXYQ14T	RXYQ16T	RXYQ16T	RXYQ16T
Outdoor unit 3	RXYQ16T	RXYQ16T	RXYQ16T	RXYQ18T

Combination of Outdoor Units (Standard Type)

Capacity range	6HP	8HP	10HP	12HP	14HP	16HP
Model name	**RXYQ6T**	**RXYQ8T**	**RXYQ10T**	**RXYQ12T**	**RXYQ14T**	**RXYQ16T**

Capacity range	18HP	20HP	22HP	24HP	26HP	28HP	30HP	32HP
Model name	**RXYQ18TN**	**RXYQ20TN**	**RXYQ22TN**	**RXYQ24TN**	**RXYQ26TN**	**RXYQ28TN**	**RXYQ30TN**	**RXYQ32TN**
Outdoor unit 1	RXYQ8T	RXYQ8T	RXYQ8T	RXYQ10T	RXYQ12T	RXYQ14T	RXYQ14T	RXYQ14T
Outdoor unit 2	RXYQ10T	RXYQ12T	RXYQ14T	RXYQ14T	RXYQ14T	RXYQ14T	RXYQ16T	RXYQ18T
Outdoor unit 3	–	–	–	–	–	–	–	–

Capacity range	34HP	36HP	38HP	40HP	42HP	44HP	46HP	48HP
Model name	**RXYQ34TN**	**RXYQ36TN**	**RXYQ38TN**	**RXYQ40TN**	**RXYQ42TN**	**RXYQ44TN**	**RXYQ46TN**	**RXYQ48TN**
Outdoor unit 1	RXYQ10T	RXYQ12T	RXYQ8T	RXYQ12T	RXYQ12T	RXYQ12T	RXYQ14T	RXYQ14T
Outdoor unit 2	RXYQ12T	RXYQ12T	RXYQ12T	RXYQ12T	RXYQ14T	RXYQ16T	RXYQ14T	RXYQ16T
Outdoor unit 3	RXYQ12T	RXYQ12T	RXYQ18T	RXYQ16T	RXYQ16T	RXYQ16T	RXYQ18T	RXYQ18T

Capacity range	50HP	52HP	54HP	56HP	58HP	60HP
Model name	**RXYQ50TN**	**RXYQ52TN**	**RXYQ54TN**	**RXYQ56TN**	**RXYQ58TN**	**RXYQ60TN**
Outdoor unit 1	RXYQ14T	RXYQ16T	RXYQ18T	RXYQ18T	RXYQ18T	RXYQ20T
Outdoor unit 2	RXYQ18T	RXYQ18T	RXYQ18T	RXYQ18T	RXYQ20T	RXYQ20T
Outdoor unit 3	RXYQ18T	RXYQ18T	RXYQ18T	RXYQ20T	RXYQ20T	RXYQ20T

Combination of Outdoor Units (Space Saving Type)

Capacity range	18HP	20HP
Model name	**RXYQ18T**	**RXYQ20T**

Capacity range	22HP	24HP	26HP	28HP	30HP	32HP	34HP	36HP
Model name	**RXYQ22TS**	**RXYQ24TS**	**RXYQ26TS**	**RXYQ28TS**	**RXYQ30TS**	**RXYQ32TS**	**RXYQ34TS**	**RXYQ36TS**
Outdoor unit 1	RXYQ10T	RXYQ12T	RXYQ8T	RXYQ12T	RXYQ12T	RXYQ12T	RXYQ16T	RXYQ18T
Outdoor unit 2	RXYQ12T	RXYQ12T	RXYQ18T	RXYQ16T	RXYQ18T	RXYQ20T	RXYQ18T	RXYQ18T
Outdoor unit 3	–	–	–	–	–	–	–	–

Capacity range	38HP	40HP	42HP	44HP	46HP	48HP	50HP
Model name	**RXYQ38TS**	**RXYQ40TS**	**RXYQ42TS**	**RXYQ44TS**	**RXYQ46TS**	**RXYQ48TS**	**RXYQ50TS**
Outdoor unit 1	RXYQ18T	RXYQ20T	RXYQ12T	RXYQ12T	RXYQ12T	RXYQ12T	RXYQ12T
Outdoor unit 2	RXYQ20T	RXYQ20T	RXYQ12T	RXYQ12T	RXYQ16T	RXYQ18T	RXYQ18T
Outdoor unit 3	–	–	RXYQ18T	RXYQ20T	RXYQ18T	RXYQ18T	RXYQ20T

1.3 Air Treatment Equipment

Outdoor-air processing unit

Series	Model name			Power supply
FXMQ	125MF	200MF	250MF	V1

V1: 1 phase, 220-240V, 50Hz

Heat Reclaim Ventilator (VKM series)

Series		Model name			Power supply
Heat Reclaim Ventilator with DX coil	VKM	50GA	80GA	100GA	V1
Heat Reclaim Ventilator with DX coil and humidifier		50GAM	80GAM	100GAM	

Note: For details, refer to Engineering Data ED71-440B.

V1: 1 phase, 220-240V, 50Hz

Heat Reclaim Ventilator (VAM series)

Series		Model name									Power supply
Heat Reclaim Ventilator	VAM	150GJ	250GJ	350GJ	500GJ	650GJ	800GJ	1000GJ	1500GJ	2000GJ	VE

Note: For details, refer to Engineering Data ED71-613.

VE: 1 phase, 220-240/220V, 50/60Hz

2. External Appearance

2.1 Indoor Units

VRV Indoor Units

Ceiling mounted cassette (Round flow with sensing) type FXFQ-S 	Ceiling mounted duct type FXMQ-P
Ceiling mounted cassette (Round flow) type FXFQ-LU 	Ceiling mounted duct type FXMQ-MA
Ceiling mounted cassette (Compact multi flow) type FXZQ-M 	Ceiling suspended type FXHQ-MA
4-way flow ceiling suspended type FXUQ-A 	Wall mounted type FXAQ-P
Ceiling mounted cassette (Double flow) type FXCQ-M 	Floor standing type FXLQ-MA 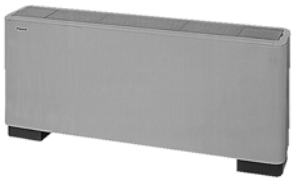
Ceiling mounted cassette corner type FXKQ-MA 	Concealed floor standing type FXNQ-MA 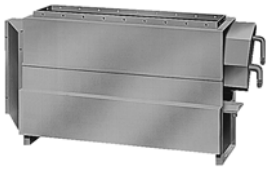
Slim ceiling mounted duct type FXDQ-PB FXDQ-NB 	Floor standing duct type FXVQ-M

Residential Indoor Units with Connection to BP Units

Ceiling mounted cassette type FCQ-B 	Slim ceiling mounted duct type (900/1,100 mm width type) FDXS-C
Ceiling mounted cassette type (Compact multi flow) FFQ-B 	Wall mounted type FTXS-D FTXS-E
Ceiling mounted built-in type FBQ-B 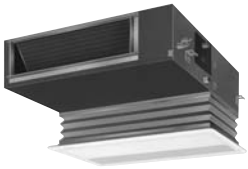	Wall mounted type FTXS-F
Slim ceiling mounted duct type (700 mm width type) CDXS-EA 	

BP units

BPMKS967A3 (3 ports)
BPMKS967A2 (2 ports)

2.2 Outdoor Units

High-COP Type

RXYQ12 / 14 / 16TH	RXYQ18 / 20 / 22 / 24 / 26 / 28 / 30 / 32TH

RXYQ34TH	RXYQ36TH	RXYQ38TH

RXYQ40TH	RXYQ42 / 44 / 46 / 48 / 50TH

Standard Type

RXYQ6 / 8 / 10 / 12T	RXYQ14 / 16T	RXYQ18 / 20TN
RXYQ22 / 24 / 26TN	**RXYQ28 / 30 / 32TN**	**RXYQ34 / 36TN**
RXYQ38 / 40TN	**RXYQ42 / 44TN**	**RXYQ46 / 48 / 50 / 52 / 54 / 56 / 58 / 60TN**

Space Saving Type

RXYQ18 / 20T	RXYQ22 / 24TS
RXYQ26 / 28 / 30 / 32TS	**RXYQ34 / 36 / 38 / 40TS**
RXYQ42 / 44TS	**RXYQ46 / 48 / 50TS**

2.3 Air Treatment Equipment

Outdoor-air processing unit	Heat Reclaim Ventilator (VKM series)	Heat Reclaim Ventilator (VAM series)
FXMQ-MF	VKM-GA VKM-GAM with DX coil (GA) with DX coil and humidifier (GAM)	VAM-GJ

3. Combination of Outdoor Units

High-COP Type

System capacity		Number of units	Module							Outdoor Unit Multi Connection Piping Kit ★1
kW	HP		6	8	10	12	14	16	18	
32.0	12HP	2	●●							BHFP22P100
38.4	14HP	2	●	●						
44.8	16HP	2		●●						
48.0	18HP	3	●●●							BHFP22P151
54.4	20HP	3	●●	●						
60.8	22HP	3	●	●●						
67.2	24HP	3		●●●						
72.8	26HP	3		●●	●					
78.3	28HP	3		●●		●				
83.9	30HP	3		●	●	●				
89.4	32HP	3		●		●●				
95.9	34HP	3		●		●	●			
102	36HP	3		●			●●			
107	38HP	3				●●	●			
114	40HP	3				●	●●			
120	42HP	3					●●●			
125	44HP	3					●●	●		
130	46HP	3					●	●●		
135	48HP	3						●●●		
140	50HP	3						●●	●	

Note: ★1 For multiple connection, the outdoor unit multi connection piping kit (separately sold) is required.

Standard Type

System capacity		Number of units	Module								Outdoor Unit Multi Connection Piping Kit ★1
kW	HP		6	8	10	12	14	16	18	20	
16.0	6HP	1	●								—
22.4	8HP	1		●							
28.0	10HP	1			●						
33.5	12HP	1				●					
40.0	14HP	1					●				
45.0	16HP	1						●			
50.4	18HP	2		●	●						BHFP22P100
55.9	20HP	2		●		●					
62.4	22HP	2		●			●				
68.0	24HP	2			●		●				
73.5	26HP	2				●	●				
80.0	28HP	2					●●				
85.0	30HP	2					●	●			
90.0	32HP	2					●		●		
95.0	34HP	3			●	●●					BHFP22P151
101	36HP	3				●●●					
106	38HP	3		●		●			●		
112	40HP	3				●●		●			
119	42HP	3				●	●	●			
124	44HP	3				●		●●			
130	46HP	3					●●		●		
135	48HP	3					●	●	●		
140	50HP	3					●		●●		
145	52HP	3						●	●●		
150	54HP	3							●●●		
156	56HP	3							●●	●	
162	58HP	3							●	●●	
168	60HP	3								●●●	

Note: ★1 For multiple connection, the outdoor unit multi connection piping kit (separately sold) is required.

Space Saving Type

System capacity		Number of units	Module							Outdoor Unit Multi Connection Piping Kit ★1
kW	HP		8	10	12	14	16	18	20	
50.0	18HP	1						●		—
56.0	20HP	1							●	
61.5	22HP	2		●	●					BHFP22P100
67.0	24HP	2			●●					
72.4	26HP	2	●					●		
78.5	28HP	2			●		●			
83.5	30HP	2			●			●		
89.5	32HP	2			●				●	
95.0	34HP	2					●	●		
100	36HP	2						●●		
106	38HP	2						●	●	
112	40HP	2							●●	
117	42HP	3			●●			●		BHFP22P151
123	44HP	3			●●				●	
129	46HP	3			●		●	●		
134	48HP	3			●			●●		
140	50HP	3			●			●	●	

Note: ★1 For multiple connection, the outdoor unit multi connection piping kit (separately sold) is required.

4. Capacity Range

4.1 Capacity Range for *VRV* Indoor Units Only

4.1.1 Combination Ratio

$$\text{Combination ratio} = \frac{\text{Total capacity index of the indoor units}}{\text{Capacity index of the outdoor units}}$$

Type	Min. combination ratio	Max. combination ratio					
		Types of connected indoor units			Type of connected air treatment equipments		
					VKM	FXMQ-MF	
		FXDQ, FXMQ-P, FXAQ	Including FXFQ25LU, FXFQ-S or FXVQ at least one unit	Other indoor unit models	When VKM and indoor units are connected	When FXMQ-MF is only connected	When FXMQ-MF and indoor units are connected
Single outdoor units	50%	200%	130%	200%	130%	100%	100%∗
Double outdoor units				160%			
Triple outdoor units				130%			

Note: If the operational capacity of indoor units is more than 130%, low airflow operation is enforced in all the indoor units.

∗ When outdoor-air processing units (FXMQ-MF) and standard indoor units are connected, the total connection capacity of the outdoor-air processing units (FXMQ-MF) must not exceed 30% of the capacity index of the outdoor units. And the connection ratio must not exceed 100%.

Note: When outdoor-air processing mode of FXVQ is selected, be sure to connect as follows:

HP	Indoor Unit	Outdoor Unit
		ASEAN
5HP	FXVQ125MY1 × 1	RXYQ6TY1 × 1
8HP	FXVQ200MY1 × 1	RXYQ8TY1 × 1
10HP	FXVQ250MY1 × 1	RXYQ10TY1 × 1
16HP	FXVQ400MY1 × 1	RXYQ16TY1 × 1
20HP	FXVQ500MY1 × 1 FXVQ500MY16 × 1	RXYQ20TNY1 × 1

4.1.2 Outdoor Unit Combinations

High-COP Type

kW	HP	Capacity index	Model name	Combination	Outdoor unit multi connection piping kit *1	Total capacity index of connectable indoor units *2 *3	Maximum number of connectable indoor units *2
32.0	**12HP**	300	RXYQ12TH	RXYQ6T × 2	BHFP22P100	150 to 390 (480)	19 (24)
38.4	**14HP**	350	RXYQ14TH	RXYQ6T + RXYQ8T		175 to 455 (560)	22 (28)
44.8	**16HP**	400	RXYQ16TH	RXYQ8T × 2		200 to 520 (640)	26 (32)
48.0	**18HP**	450	RXYQ18TH	RXYQ6T × 3	BHFP22P151	225 to 585 (585)	29 (29)
54.4	**20HP**	500	RXYQ20TH	RXYQ6T × 2 + RXYQ8T		250 to 650 (650)	32 (32)
60.8	**22HP**	550	RXYQ22TH	RXYQ6T + RXYQ8T × 2		275 to 715 (715)	35 (35)
67.2	**24HP**	600	RXYQ24TH	RXYQ8T × 3		300 to 780 (780)	39 (39)
72.8	**26HP**	650	RXYQ26TH	RXYQ8T × 2 + RXYQ10T		325 to 845 (845)	42 (42)
78.3	**28HP**	700	RXYQ28TH	RXYQ8T × 2 + RXYQ12T		350 to 910 (910)	45 (45)
83.9	**30HP**	750	RXYQ30TH	RXYQ8T + RXYQ10T + RXYQ12T		375 to 975 (975)	48 (48)
89.4	**32HP**	800	RXYQ32TH	RXYQ8T + RXYQ12T × 2		400 to 1,040 (1,040)	52 (52)
95.9	**34HP**	850	RXYQ34TH	RXYQ8T + RXYQ12T + RXYQ14T		425 to 1,105 (1,105)	55 (55)
102	**36HP**	900	RXYQ36TH	RXYQ8T + RXYQ14T × 2		450 to 1,170 (1,170)	58 (58)
107	**38HP**	950	RXYQ38TH	RXYQ12T × 2 + RXYQ14T		475 to 1,235 (1,235)	61 (61)
114	**40HP**	1,000	RXYQ40TH	RXYQ12T + RXYQ14T × 2		500 to 1,300 (1,300)	64 (64)
120	**42HP**	1,050	RXYQ42TH	RXYQ14T × 3		525 to 1,365 (1,365)	
125	**44HP**	1,100	RXYQ44TH	RXYQ14T × 2 + RXYQ16T		550 to 1,430 (1,430)	
130	**46HP**	1,150	RXYQ46TH	RXYQ14T + RXYQ16T × 2		575 to 1,495 (1,495)	
135	**48HP**	1,200	RXYQ48TH	RXYQ16T × 3		600 to 1,560 (1,560)	
140	**50HP**	1,250	RXYQ50TH	RXYQ16T × 2 + RXYQ18T		625 to 1,625 (1,625)	

Notes: *1 For multiple connection, the outdoor unit multi connection piping kit (separately sold) is required.

*2 Values inside brackets are based on connection of indoor units rated at maximum capacity, 200% for single outdoor units, 160% for double outdoor units, and 130% for triple outdoor units.

*3 When outdoor-air processing units (FXMQ-MF) and standard indoor units are connected, the total connection capacity of the outdoor-air processing units (FXMQ-MF) must not exceed 30% of the capacity index of the outdoor units. And the connection ratio must not exceed 100%.

Standard Type

kW	HP	Capacity index	Model name	Combination	Outdoor unit multi connection piping kit *1	Total capacity index of connectable indoor units *2 *3	Maximum number of connectable indoor units *2
16.0	**6HP**	150	RXYQ6T	RXYQ6T	—	75 to 195 (300)	9 (15)
22.4	**8HP**	200	RXYQ8T	RXYQ8T	—	100 to 260 (400)	13 (20)
28.0	**10HP**	250	RXYQ10T	RXYQ10T	—	125 to 325 (500)	16 (25)
33.5	**12HP**	300	RXYQ12T	RXYQ12T	—	150 to 390 (600)	19 (30)
40.0	**14HP**	350	RXYQ14T	RXYQ14T	—	175 to 455 (700)	22 (35)
45.0	**16HP**	400	RXYQ16T	RXYQ16T	—	200 to 520 (800)	26 (40)
50.4	**18HP**	450	RXYQ18TN	RXYQ8T + RXYQ10T	BHFP22P100	225 to 585 (720)	29 (36)
55.9	**20HP**	500	RXYQ20TN	RXYQ8T + RXYQ12T		250 to 650 (800)	32 (40)
62.4	**22HP**	550	RXYQ22TN	RXYQ8T + RXYQ14T		275 to 715 (880)	35 (44)
68.0	**24HP**	600	RXYQ24TN	RXYQ10T + RXYQ14T		300 to 780 (960)	39 (48)
73.5	**26HP**	650	RXYQ26TN	RXYQ12T + RXYQ14T		325 to 845 (1,040)	42 (52)
80.0	**28HP**	700	RXYQ28TN	RXYQ14T × 2		350 to 910 (1,120)	45 (56)
85.0	**30HP**	750	RXYQ30TN	RXYQ14T + RXYQ16T		375 to 975 (1,200)	48 (60)
90.0	**32HP**	800	RXYQ32TN	RXYQ14T + RXYQ18T		400 to 1,040 (1,280)	52 (64)
95.0	**34HP**	850	RXYQ34TN	RXYQ10T + RXYQ12T × 2	BHFP22P151	425 to 1,105 (1,105)	55 (55)
101	**36HP**	900	RXYQ36TN	RXYQ12T × 3		450 to 1,170 (1,170)	58 (58)
106	**38HP**	950	RXYQ38TN	RXYQ8T + RXYQ12T + RXYQ18T		475 to 1,235 (1,235)	61 (61)
112	**40HP**	1,000	RXYQ40TN	RXYQ12T × 2 + RXYQ16T		500 to 1,300 (1,300)	64 (64)
119	**42HP**	1,050	RXYQ42TN	RXYQ12T + RXYQ14T + RXYQ16T		525 to 1,365 (1,365)	
124	**44HP**	1,100	RXYQ44TN	RXYQ12T + RXYQ16T × 2		550 to 1,430 (1,430)	
130	**46HP**	1,150	RXYQ46TN	RXYQ14T × 2 + RXYQ18T		575 to 1,495 (1,495)	
135	**48HP**	1,200	RXYQ48TN	RXYQ14T + RXYQ16T + RXYQ18T		600 to 1,560 (1,560)	
140	**50HP**	1,250	RXYQ50TN	RXYQ14T + RXYQ18T × 2		625 to 1,625 (1,625)	
145	**52HP**	1,300	RXYQ52TN	RXYQ16T + RXYQ18T × 2		650 to 1,690 (1,690)	
150	**54HP**	1,350	RXYQ54TN	RXYQ18T × 3		675 to 1,755 (1,755)	
156	**56HP**	1,400	RXYQ56TN	RXYQ18T × 2 + RXYQ20T		700 to 1,820 (1,820)	
162	**58HP**	1,450	RXYQ58TN	RXYQ18T + RXYQ20T × 2		725 to 1,885 (1,885)	
168	**60HP**	1,500	RXYQ60TN	RXYQ20T × 3		750 to 1,950 (1,950)	

Notes: *1 For multiple connection, the outdoor unit multi connection piping kit (separately sold) is required.
*2 Values inside brackets are based on connection of indoor units rated at maximum capacity, 200% for single outdoor units, 160% for double outdoor units, and 130% for triple outdoor units.
*3 When outdoor-air processing units (FXMQ-MF) and standard indoor units are connected, the total connection capacity of the outdoor-air processing units (FXMQ-MF) must not exceed 30% of the capacity index of the outdoor units. And the connection ratio must not exceed 100%.

Space Saving Type

kW	HP	Capacity index	Model name	Combination	Outdoor unit multi connection piping kit *1	Total capacity index of connectable indoor units *2 *3	Maximum number of connectable indoor units *2
50.0	**18HP**	450	RXYQ18T	RXYQ18T	—	225 to 585 (900)	29 (45)
56.0	**20HP**	500	RXYQ20T	RXYQ20T	—	250 to 650 (1,000)	32 (50)
61.5	**22HP**	550	RXYQ22TS	RXYQ10T + RXYQ12T	BHFP22P100	275 to 715 (880)	35 (44)
67.0	**24HP**	600	RXYQ24TS	RXYQ12T × 2		300 to 780 (960)	39 (48)
72.4	**26HP**	650	RXYQ26TS	RXYQ8T + RXYQ18T		325 to 845 (1,040)	42 (52)
78.5	**28HP**	700	RXYQ28TS	RXYQ12T + RXYQ16T		350 to 910 (1,120)	45 (56)
83.5	**30HP**	750	RXYQ30TS	RXYQ12T + RXYQ18T		375 to 975 (1,200)	48 (60)
89.5	**32HP**	800	RXYQ32TS	RXYQ12T + RXYQ20T		400 to 1,040 (1,280)	52 (64)
95.0	**34HP**	850	RXYQ34TS	RXYQ16T + RXYQ18T		425 to 1,105 (1,360)	55 (64)
100	**36HP**	900	RXYQ36TS	RXYQ18T × 2		450 to 1,170 (1,440)	58 (64)
106	**38HP**	950	RXYQ38TS	RXYQ18T + RXYQ20T		475 to 1,235 (1,520)	61 (64)
112	**40HP**	1,000	RXYQ40TS	RXYQ20T × 2		500 to 1,300 (1,600)	64 (64)
117	**42HP**	1,050	RXYQ42TS	RXYQ12T × 2 + RXYQ18T	BHFP22P151	525 to 1,365 (1,365)	
123	**44HP**	1,100	RXYQ44TS	RXYQ12T × 2 + RXYQ20T		550 to 1,430 (1,430)	
129	**46HP**	1,150	RXYQ46TS	RXYQ12T + RXYQ16T + RXYQ18T		575 to 1,495 (1,495)	
134	**48HP**	1,200	RXYQ48TS	RXYQ12T + RXYQ18T × 2		600 to 1,560 (1,560)	
140	**50HP**	1,250	RXYQ50TS	RXYQ12T + RXYQ18T + RXYQ20T		625 to 1,625 (1,625)	

Notes: *1 For multiple connection, the outdoor unit multi connection piping kit (separately sold) is required.
*2 Values inside brackets are based on connection of indoor units rated at maximum capacity, 200% for single outdoor units, 160% for double outdoor units, and 130% for triple outdoor units.
*3 When outdoor-air processing units (FXMQ-MF) and standard indoor units are connected, the total connection capacity of the outdoor-air processing units (FXMQ-MF) must not exceed 30% of the capacity index of the outdoor units. And the connection ratio must not exceed 100%.

4.1.3 Indoor Unit Connection Capacity

High-COP Type

Type	HP	Capacity index	Model name	Types of connected indoor units						
				Min. combination ratio	FXDQ, FXMQ-P, FXAQ		Including FXFQ25LU, FXFQ-S and FXVQ at least one unit		Other indoor unit models	
					Max. combination ratio	Max. number of connectable indoor units	Max. combination ratio	Max. number of connectable indoor units	Max. combination ratio	Max. number of connectable indoor units
Double outdoor units	12	300	RXYQ12TH	50%	200%	30	130%	19	160%	24
	14	350	RXYQ14TH			35		22		28
	16	400	RXYQ16TH			40		26		32
Triple outdoor units	18	450	RXYQ18TH			45		29	130%	29
	20	500	RXYQ20TH			50		32		32
	22	550	RXYQ22TH			55		35		35
	24	600	RXYQ24TH			60		39		39
	26	650	RXYQ26TH			64		42		42
	28	700	RXYQ28TH					45		45
	30	750	RXYQ30TH					48		48
	32	800	RXYQ32TH					52		52
	34	850	RXYQ34TH					55		55
	36	900	RXYQ36TH					58		58
	38	950	RXYQ38TH					61		61
	40	1,000	RXYQ40TH					64		64
	42	1,050	RXYQ42TH							
	44	1,100	RXYQ44TH							
	46	1,150	RXYQ46TH							
	48	1,200	RXYQ48TH							
	50	1,250	RXYQ50TH							

Note: If the operational capacity of indoor units is more than 130%, low airflow operation is enforced in all the indoor units.

Standard Type

Type	HP	Capacity index	Model name	Types of connected indoor units						
				Min. combination ratio	FXDQ, FXMQ-P, FXAQ		Including FXFQ25LU, FXFQ-S and FXVQ at least one unit		Other indoor unit models	
					Max. combination ratio	Max. number of connectable indoor units	Max. combination ratio	Max. number of connectable indoor units	Max. combination ratio	Max. number of connectable indoor units
Single outdoor units	6	150	RXYQ6T	50%	200%	15	130%	9	200%	15
	8	200	RXYQ8T			20		13		20
	10	250	RXYQ10T			25		16		25
	12	300	RXYQ12T			30		19		30
	14	350	RXYQ14T			35		22		35
	16	400	RXYQ16T			40		26		40
Double outdoor units	18	450	RXYQ18TN			45		29	160%	36
	20	500	RXYQ20TN			50		32		40
	22	550	RXYQ22TN			55		35		44
	24	600	RXYQ24TN			60		39		48
	26	650	RXYQ26TN			64		42		52
	28	700	RXYQ28TN					45		56
	30	750	RXYQ30TN					48		60
	32	800	RXYQ32TN					52		64
Triple outdoor units	34	850	RXYQ34TN					55	130%	55
	36	900	RXYQ36TN					58		58
	38	950	RXYQ38TN					61		61
	40	1,000	RXYQ40TN					64		64
	42	1,050	RXYQ42TN							
	44	1,100	RXYQ44TN							
	46	1,150	RXYQ46TN							
	48	1,200	RXYQ48TN							
	50	1,250	RXYQ50TN							
	52	1,300	RXYQ52TN							
	54	1,350	RXYQ54TN							
	56	1,400	RXYQ56TN							
	58	1,450	RXYQ58TN							
	60	1,500	RXYQ60TN							

Note: If the operational capacity of indoor units is more than 130%, low airflow operation is enforced in all the indoor units.

Space Saving Type

<table>
<tr><th rowspan="3">Type</th><th rowspan="3">HP</th><th rowspan="3">Capacity index</th><th rowspan="3">Model name</th><th colspan="7">Types of connected indoor units</th></tr>
<tr><th rowspan="2">Min. combination ratio</th><th colspan="2">FXDQ, FXMQ-P, FXAQ</th><th colspan="2">Including FXFQ25LU, FXFQ-S and FXVQ at least one unit</th><th colspan="2">Other indoor unit models</th></tr>
<tr><th>Max. combination ratio</th><th>Max. number of connectable indoor units</th><th>Max. combination ratio</th><th>Max. number of connectable indoor units</th><th>Max. combination ratio</th><th>Max. number of connectable indoor units</th></tr>
<tr><td rowspan="2">Single outdoor units</td><td>18</td><td>450</td><td>RXYQ18T</td><td rowspan="15">50%</td><td rowspan="15">200%</td><td>45</td><td rowspan="15">130%</td><td>29</td><td rowspan="2">200%</td><td>45</td></tr>
<tr><td>20</td><td>500</td><td>RXYQ20T</td><td>50</td><td>32</td><td>50</td></tr>
<tr><td rowspan="10">Double outdoor units</td><td>22</td><td>550</td><td>RXYQ22TS</td><td>55</td><td>35</td><td rowspan="8">160%</td><td>44</td></tr>
<tr><td>24</td><td>600</td><td>RXYQ24TS</td><td>60</td><td>39</td><td>48</td></tr>
<tr><td>26</td><td>650</td><td>RXYQ26TS</td><td rowspan="9">64</td><td>42</td><td>52</td></tr>
<tr><td>28</td><td>700</td><td>RXYQ28TS</td><td>45</td><td>56</td></tr>
<tr><td>30</td><td>750</td><td>RXYQ30TS</td><td>48</td><td>60</td></tr>
<tr><td>32</td><td>800</td><td>RXYQ32TS</td><td>52</td><td rowspan="8">64</td></tr>
<tr><td>34</td><td>850</td><td>RXYQ34TS</td><td>55</td></tr>
<tr><td>36</td><td>900</td><td>RXYQ36TS</td><td>58</td></tr>
<tr><td>38</td><td>950</td><td>RXYQ38TS</td><td>61</td></tr>
<tr><td>40</td><td>1,000</td><td>RXYQ40TS</td><td rowspan="5">64</td></tr>
<tr><td rowspan="5">Triple outdoor units</td><td>42</td><td>1,050</td><td>RXYQ42TS</td><td rowspan="3">130%</td></tr>
<tr><td>44</td><td>1,100</td><td>RXYQ44TS</td></tr>
<tr><td>46</td><td>1,150</td><td>RXYQ46TS</td></tr>
<tr><td>48</td><td>1,200</td><td>RXYQ48TS</td></tr>
<tr><td>50</td><td>1,250</td><td>RXYQ50TS</td></tr>
</table>

Note: If the operational capacity of indoor units is more than 130%, low airflow operation is enforced in all the indoor units.

4.2 Capacity Range for Mixed Combination of *VRV* and Residential Indoor Units

4.2.1 Combination Ratio

$$\text{Combination ratio} = \frac{\text{Total capacity index of the indoor units}}{\text{Capacity index of the outdoor units}}$$

Type	Min. combination ratio	Max. combination ratio		
		Type of connected indoor units	Type of connected air treatment equipments	
			VKM	FXMQ-MF
		VRV and Residential indoor units *1	When VKM and indoor units are connected	When FXMQ-MF and indoor units are connected
Single outdoor units	80%	130%	130%	100% *2

Notes: *1 Involve the case of Residential indoor units only.
*2 When outdoor-air processing units (FXMQ-MF) and standard indoor units are connected, the total connection capacity of the outdoor-air processing units (FXMQ-MF) must not exceed 30% of the capacity index of the outdoor units. And the connection ratio must not exceed 100%.

4.2.2 Outdoor Unit Combinations

Standard Type

kW	HP	Capacity index	Model name	Combination	Outdoor unit multi connection piping kit	Total capacity index of connectable indoor units *1 *2	Maximum number of connectable indoor units
16.0	**6HP**	150	RXYQ6T	RXYQ6T	—	120 to 195 (195)	9 (9)
22.4	**8HP**	200	RXYQ8T	RXYQ8T	—	160 to 260 (260)	13 (13)
28.0	**10HP**	250	RXYQ10T	RXYQ10T	—	200 to 325 (325)	16 (16)
33.5	**12HP**	300	RXYQ12T	RXYQ12T	—	240 to 390 (390)	19 (19)
40.0	**14HP**	350	RXYQ14T	RXYQ14T	—	280 to 455 (455)	22 (22)
45.0	**16HP**	400	RXYQ16T	RXYQ16T	—	320 to 520 (520)	26 (26)

Notes: *1 Total capacity index of connectable indoor units must be 80% ~ 130% of the capacity index of the outdoor unit.

*2 When outdoor-air processing units (FXMQ-MF) and standard indoor units are connected, the total connection capacity of the outdoor-air processing units (FXMQ-MF) must not exceed 30% of the capacity index of the outdoor units. And the connection ratio must not exceed 100%.

Space Saving Type

kW	HP	Capacity index	Model name	Combination	Outdoor unit multi connection piping kit	Total capacity index of connectable indoor units *1 *2	Maximum number of connectable indoor units
50.0	**18HP**	450	RXYQ18T	RXYQ18T	—	360 to 585 (585)	29 (29)
56.0	**20HP**	500	RXYQ20T	RXYQ20T	—	400 to 650 (650)	32 (32)

Notes: *1 Total capacity index of connectable indoor units must be 80% ~ 130% of the capacity index of the outdoor unit.

*2 When outdoor-air processing units (FXMQ-MF) and standard indoor units are connected, the total connection capacity of the outdoor-air processing units (FXMQ-MF) must not exceed 30% of the capacity index of the outdoor units. And the connection ratio must not exceed 100%.

4.2.3 Indoor Unit Connection Capacity

Standard Type

Type	HP	Capacity index	Model name	Types of connected indoor units		
				Min. combination ratio	Max. combination ratio	Max. number of connectable indoor units
Single outdoor units	6	150	RXYQ6T	80%	130%	9
	8	200	RXYQ8T			13
	10	250	RXYQ10T			16
	12	300	RXYQ12T			19
	14	350	RXYQ14T			22
	16	400	RXYQ16T			26

Note: Total capacity index of connectable indoor units must be 80% ~ 130% of the capacity index of the outdoor unit.

Space Saving Type

Type	HP	Capacity index	Model name	Types of connected indoor units		
				Min. combination ratio	Max. combination ratio	Max. number of connectable indoor units
Single outdoor units	18	450	RXYQ18T	80%	130%	29
	20	500	RXYQ20T			32

Note: Total capacity index of connectable indoor units must be 80% ~ 130% of the capacity index of the outdoor unit.

Part 2
Refrigerant Circuit

1. Refrigerant Circuit (Piping Diagrams) 21
   1.1 RXYQ6/8/10/12TY1.....21
   1.2 RXYQ14/16/18/20TY1.....23
   1.3 Outdoor–Air Processing Unit FXMQ125MFV1~250MFV1 25
2. Functional Parts Layout 26
   2.1 RXYQ6/8TY1.....26
   2.2 RXYQ10/12TY1.....27
   2.3 RXYQ14/16/18TY1.....28
   2.4 RXYQ20TY1.....29
3. Refrigerant Flow for Each Operation Mode.....30
   3.1 RXYQ6/8/10/12TY1.....30
   3.2 RXYQ14/16/18/20TY1.....34

1. Refrigerant Circuit (Piping Diagrams)

1.1 RXYQ6/8/10/12TY1

No. in refrigerant system diagram	Electric symbol	Name	Major Function
A	M1C	Inverter compressor (INV.)	Inverter driven compressor is operated in multi-steps according to Te.
D	M1F	INV. fan	Because the system is an air heat exchange type, the fan is operated at 10-step rotation speed by using the inverter.
E	Y1E	Electronic expansion valve (Main)	Fully open during cooling operation.
F	Y2E	Electronic expansion valve (Injection)	PI control is applied to keep the outlet superheated degree of subcooling heat exchanger constant.
G	Y1S	Solenoid valve (Four way valve)	Used to switch the operation mode between cooling and heating.
H	Y2S	Solenoid valve (Accumulator oil return)	Used to return oil from the accumulator to the compressor.
I	Y3S	Solenoid valve (Oil return 1)	Used to control the amount of oil from the oil separator to the compressor.
J	S1NPH	High pressure sensor	Used to detect high pressure.
K	S1NPL	Low pressure sensor	Used to detect low pressure.
L	S1PH	High pressure switch	In order to prevent the increase of high pressure when an error occurs, this switch is activated at high pressure of 4.0 MPa or more to stop the compressor operation.
M	—	Pressure regulating valve	This valve opens at a pressure of 4.0 MPa for prevention of pressure increase, thus resulting in no damage of functional parts due to the increase of pressure in transportation or storage.
N	—	Subcooling heat exchanger	Used to subcooling liquid refrigerant from the electronic expansion valve.
O	—	Capillary tube	Used to return the refrigerating oil separated through the oil separator to the compressor.
1	R1T	Thermistor (Outdoor air)	Used to detect outdoor air temperature, correct discharge pipe temperature, and others.
2	R21T	Thermistor (Discharge pipe)	Used to detect discharge pipe temperature, make the temperature protection control of compressor, and others.
3	R3T	Thermistor (Accumulator inlet)	Used to detect gas pipe temperature at the accumulator inlet.
4	R4T	Thermistor (Heat exchanger liquid pipe)	This detects temperature of liquid pipe between the air heat exchanger and main electronic expansion valve. Used to make judgements on the recover or discharge refrigerants to the refrigerant regulator.
5	R5T	Thermistor (Subcooling heat exchanger liquid pipe)	This detects temperature of liquid pipe between the main electronic expansion valve and subcooling heat exchanger.
6	R6T	Thermistor (Subcooling heat exchanger gas pipe)	This detects temperature of gas pipe on the evaporation side of subcooling heat exchanger. Used to exercise the constant control of superheated degree at the outlet of subcooling heat exchanger.
7	R7T	Thermistor (Heat exchanger deicer)	Used to detect liquid pipe temperature of air heat exchanger.
8	R8T	Thermistor (Compressor surface)	Detects compressor surface temperature, this switch is activated at surface temperature of 120 deg. or more to stop the compressor operation (only for RXYQ10, 12TY1).

RXYQ6/8/10/12TY1

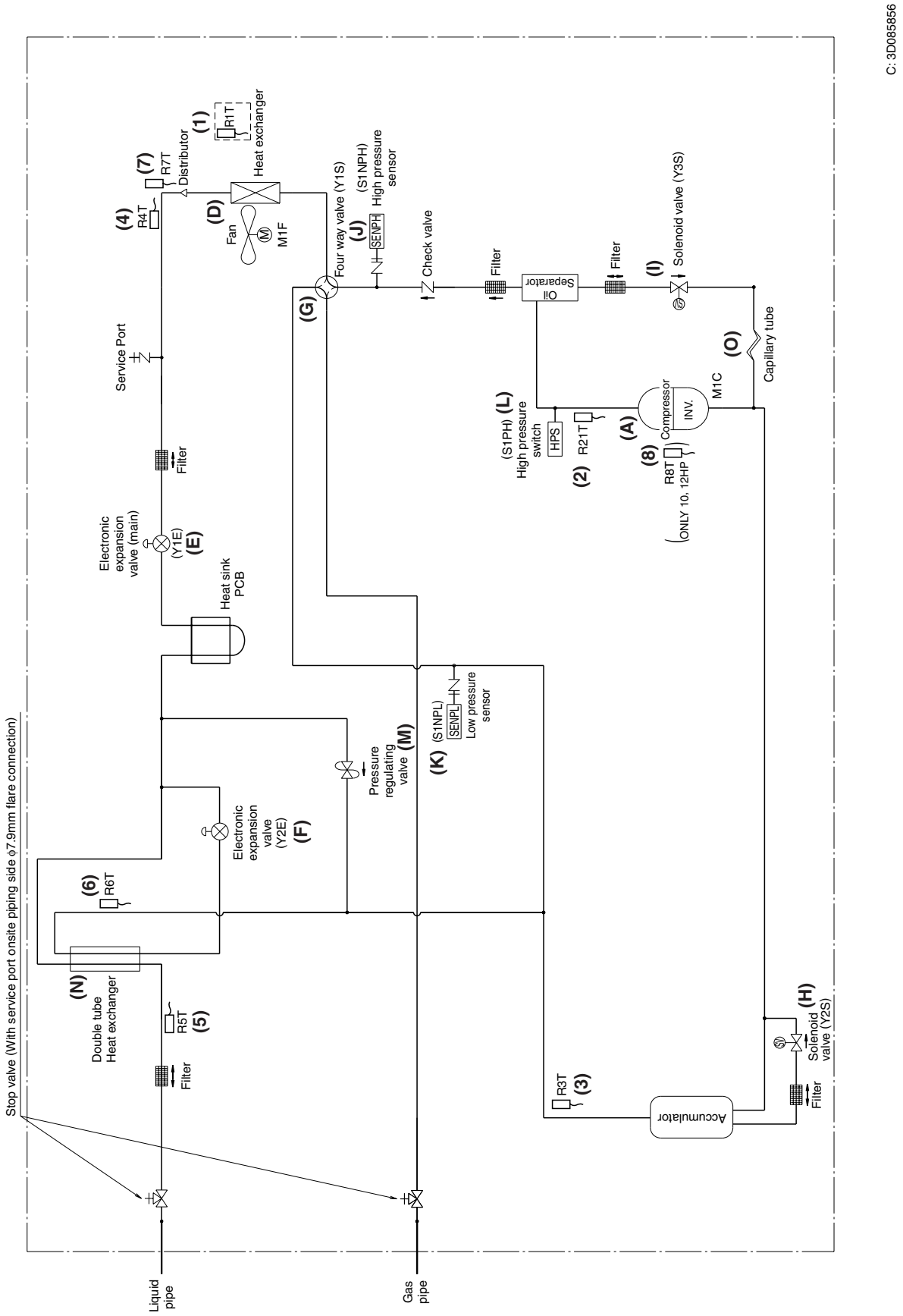

1.2 RXYQ14/16/18/20TY1

No. in refrigerant system diagram	Electric symbol	Name	Major Function
A	M1C	Inverter compressor (INV. 1)	Inverter compressor is operated in multi-steps according to Te.
B	M2C	Inverter compressor (INV. 2)	
C	M1F	INV. fan	Because the system is an air heat exchange type, the fan is operated at 10-step rotation speed by using the inverter.
D	M2F		
E	Y1E	Electronic expansion valve (Main)	Fully open during cooling operation.
F	Y2E	Electronic expansion valve (Injection)	PI control is applied to keep the outlet superheated degree of subcooling heat exchanger constant.
G	Y1S	Solenoid valve (Four way valve)	Used to switch the operation mode between cooling and heating.
H	Y2S	Solenoid valve (Accumulator oil return)	Used to return oil from the accumulator to the compressor.
I	Y3S	Solenoid valve (Oil return 1)	Used to control the amount of oil from the oil separator to the compressor.
J	Y4S	Solenoid valve (Oil return 2)	
K	S1NPH	High pressure sensor	Used to detect high pressure.
L	S1NPL	Low pressure sensor	Used to detect low pressure.
M	S1PH	High pressure switch (For INV. 1 compressor)	In order to prevent the increase of high pressure when an error occurs, this switch is activated at high pressure of 4.0 MPa or more to stop the compressor operation.
N	S2PH	High pressure switch (For INV. 2 compressor)	
O	—	Pressure regulating valve	This valve opens at a pressure of 4.0 MPa for prevention of pressure increase, thus resulting in no damage of functional parts due to the increase of pressure in transportation or storage.
P	—	Subcooling heat exchanger	Used to subcooling liquid refrigerant from the electronic expansion valve.
Q	—	Capillary tube	Used to return the refrigerating oil separated through the oil separator to the compressor.
R	—	Capillary tube	
1	R1T	Thermistor (Outdoor air)	Used to detect outdoor air temperature, correct discharge pipe temperature, and others.
2	R21T	Thermistor (INV. 1 discharge pipe)	Used to detect discharge pipe temperature, make the temperature protection control of compressor, and others.
3	R22T	Thermistor (INV. 2 discharge pipe)	
4	R3T	Thermistor (Accumulator inlet)	Used to detect gas pipe temperature at the accumulator inlet.
5	R4T	Thermistor (Heat exchanger liquid pipe)	This detects temperature of liquid pipe between the air heat exchanger and main electronic expansion valve. Used to make judgements on the recover or discharge refrigerants to the refrigerant regulator.
6	R5T	Thermistor (Subcooling heat exchanger liquid pipe)	This detects temperature of liquid pipe between the main electronic expansion valve and subcooling heat exchanger.
7	R6T	Thermistor (Subcooling heat exchanger gas pipe)	This detects temperature of gas pipe on the evaporation side of subcooling heat exchanger. Used to exercise the constant control of superheated degree at the outlet of subcooling heat exchanger.
8	R7T	Thermistor (Heat exchanger deicer)	Used to detect liquid pipe temperature of air heat exchanger.
9	R8T	Thermistor (Compressor surface)	Detects compressor surface temperature, this switch is activated at surface temperature of 120 deg. or more to stop the compressor operation (only for RXYQ20TY1).

RXYQ14/16/18/20TY1

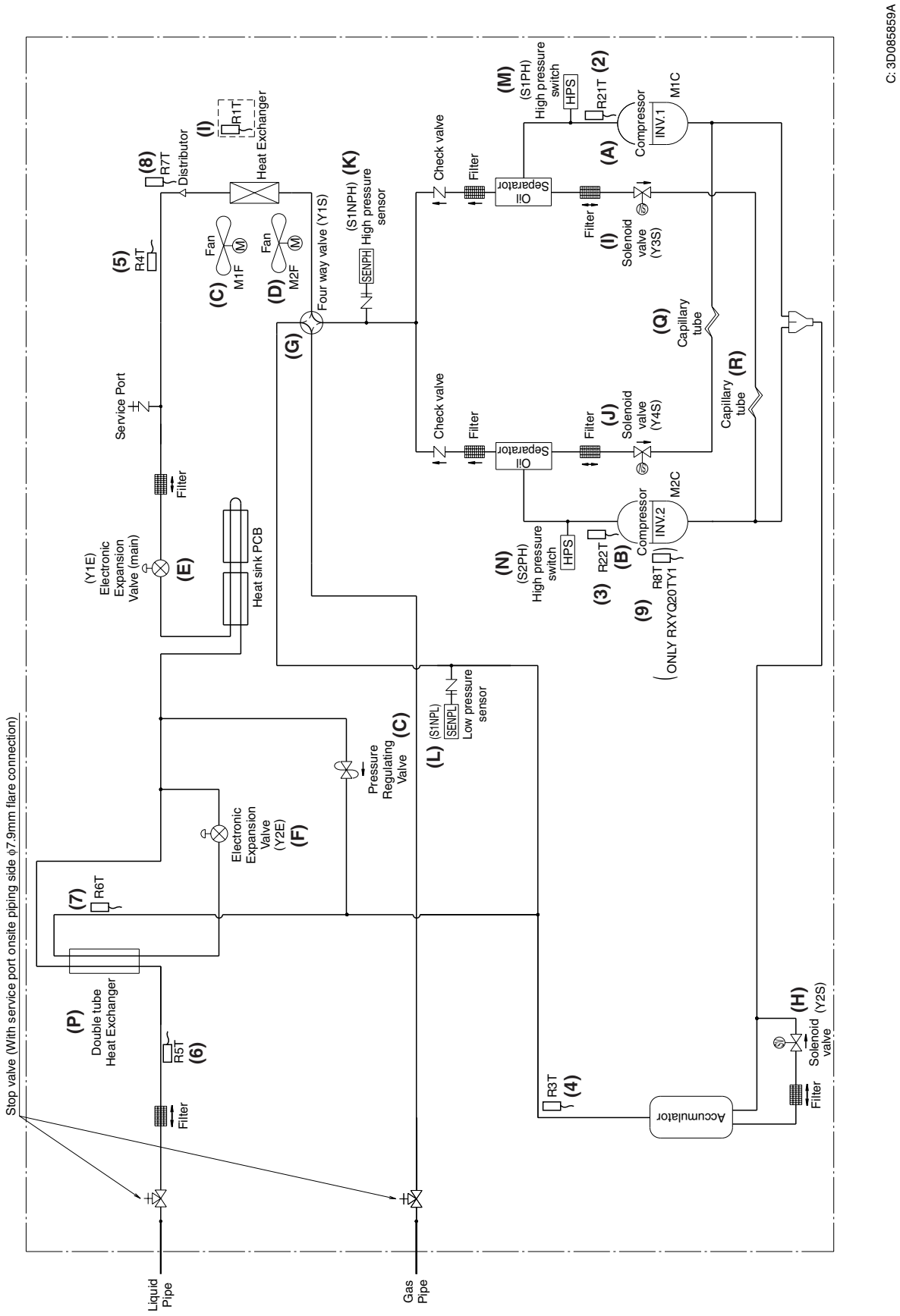

1.3 Outdoor–Air Processing Unit FXMQ125MFV1~250MFV1

1.3.1 Refrigerant System

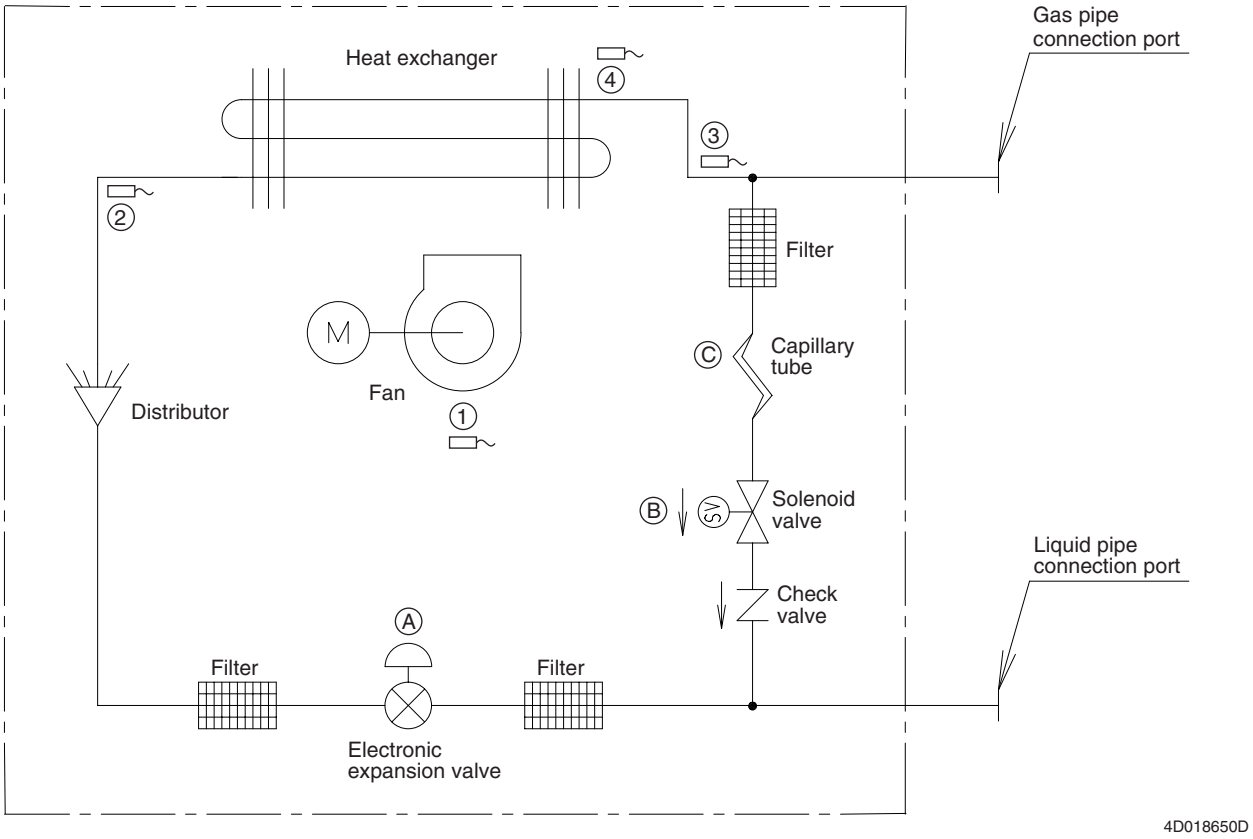

Main Control Equipment

No. in refrigerant system diagram	Electric symbol	Name	Major function
A	Y1E	Electronic expansion valve	Used to control the flow rate of refrigerant, and make the SH control (∗1) while in cooling.
B	Y1S	Solenoid valve	Used to bypass hot gas while in heating with thermostat OFF. (close while in cooling)
C	—	Capillary tube	Used to reduce pressure from high to low in bypassing hot gas.
1	R1T	Suction air thermistor	Used to turn ON or OFF the thermostat.
2	R2T	Liquid pipe thermistor	Used to control the opening degree of electronic expansion valve under the SC control (∗2).
3	R3T	Gas pipe thermistor	Used to control the opening degree of electronic expansion valve under the SH control.
4	R4T	Discharge air thermistor	Used to control the electronic expansion valve opening and thermostat ON/OFF so as to keep the discharge air temperature at the set temperature.

Note: ∗1. SH control: Superheated control of heat exchanger outlet
∗2. SC control: Subcooling control of heat exchanger outlet

2. Functional Parts Layout

2.1 RXYQ6/8TY1

Top View

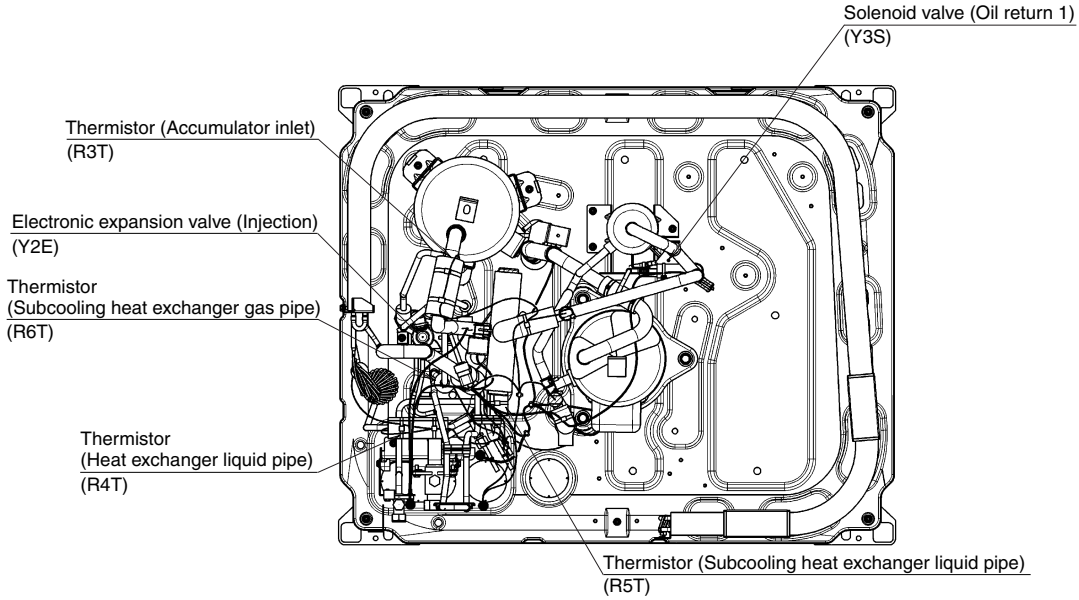

Front View

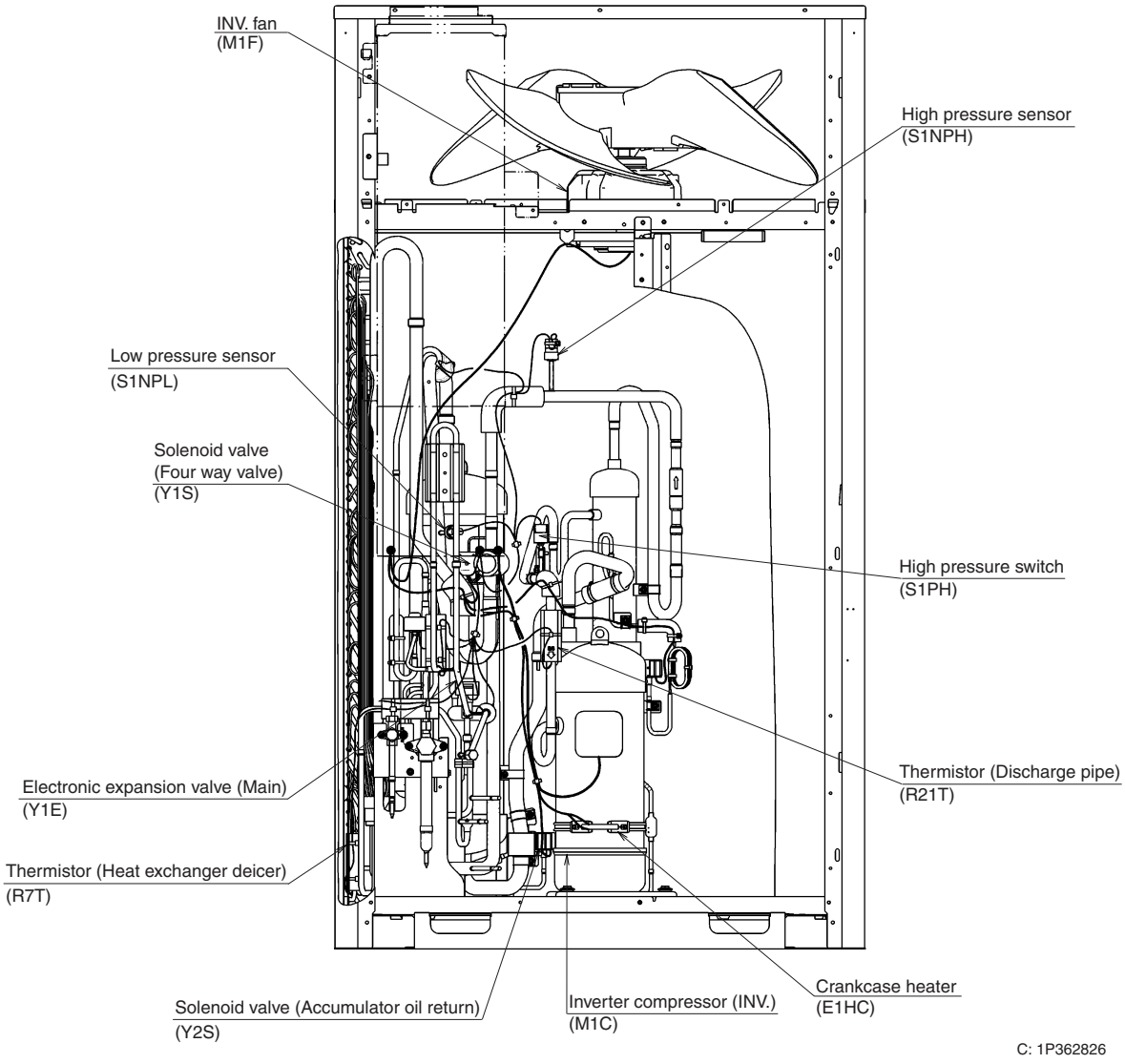

2.2 RXYQ10/12TY1

Top View

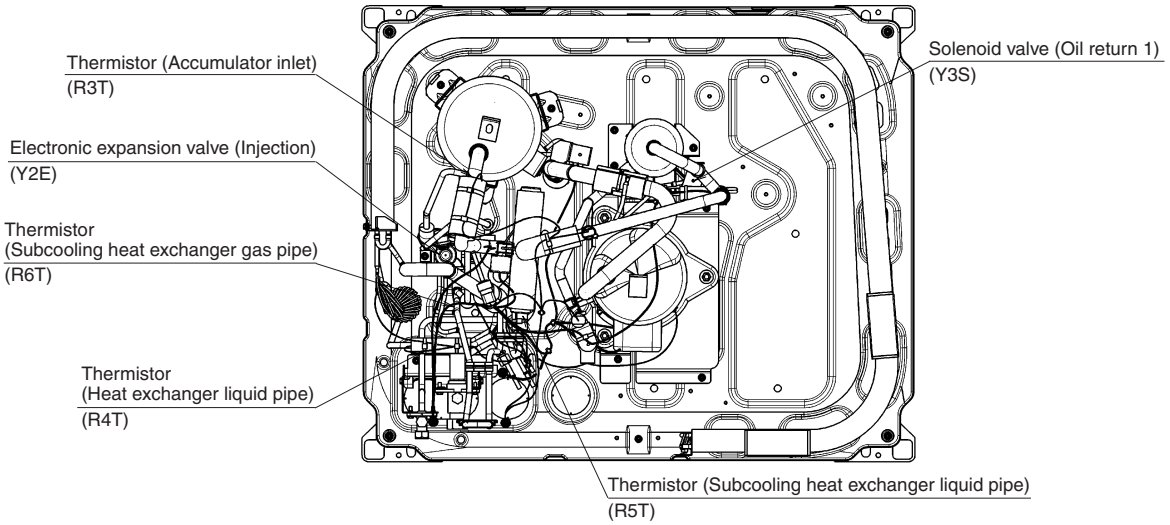

Front View

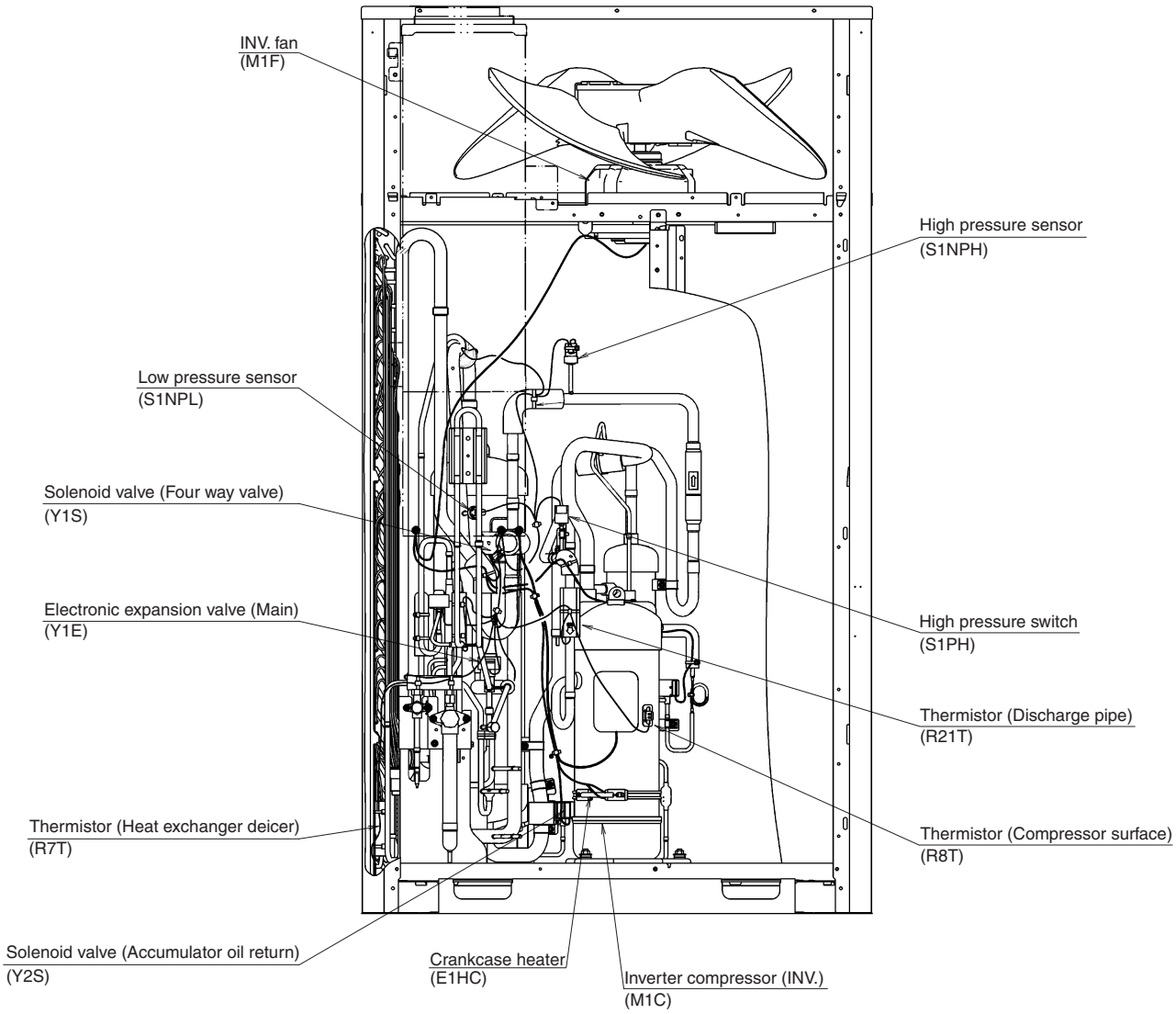

C: 1P362841

2.3 RXYQ14/16/18TY1

Top View

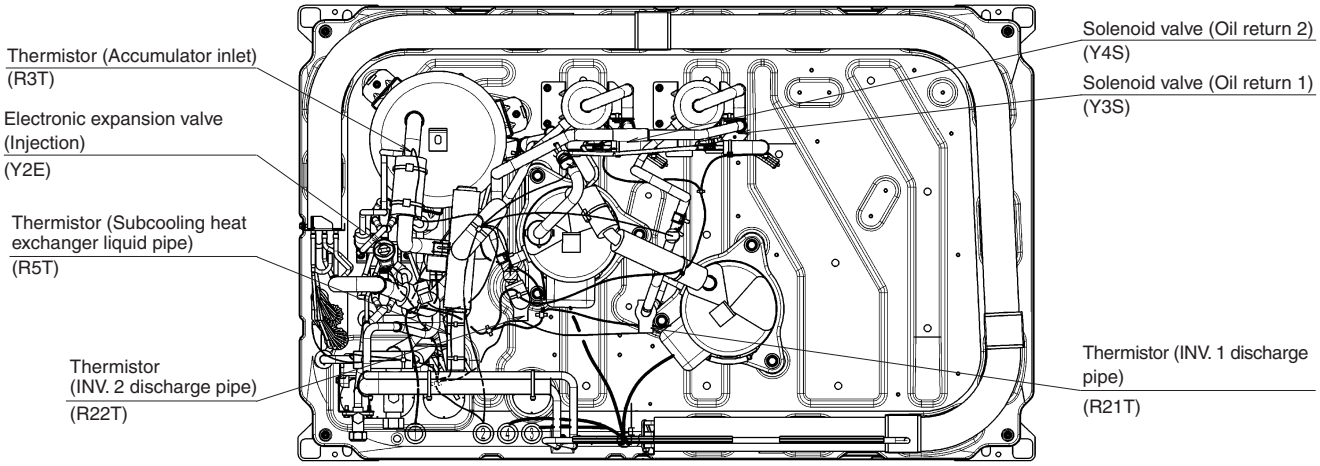

Front View

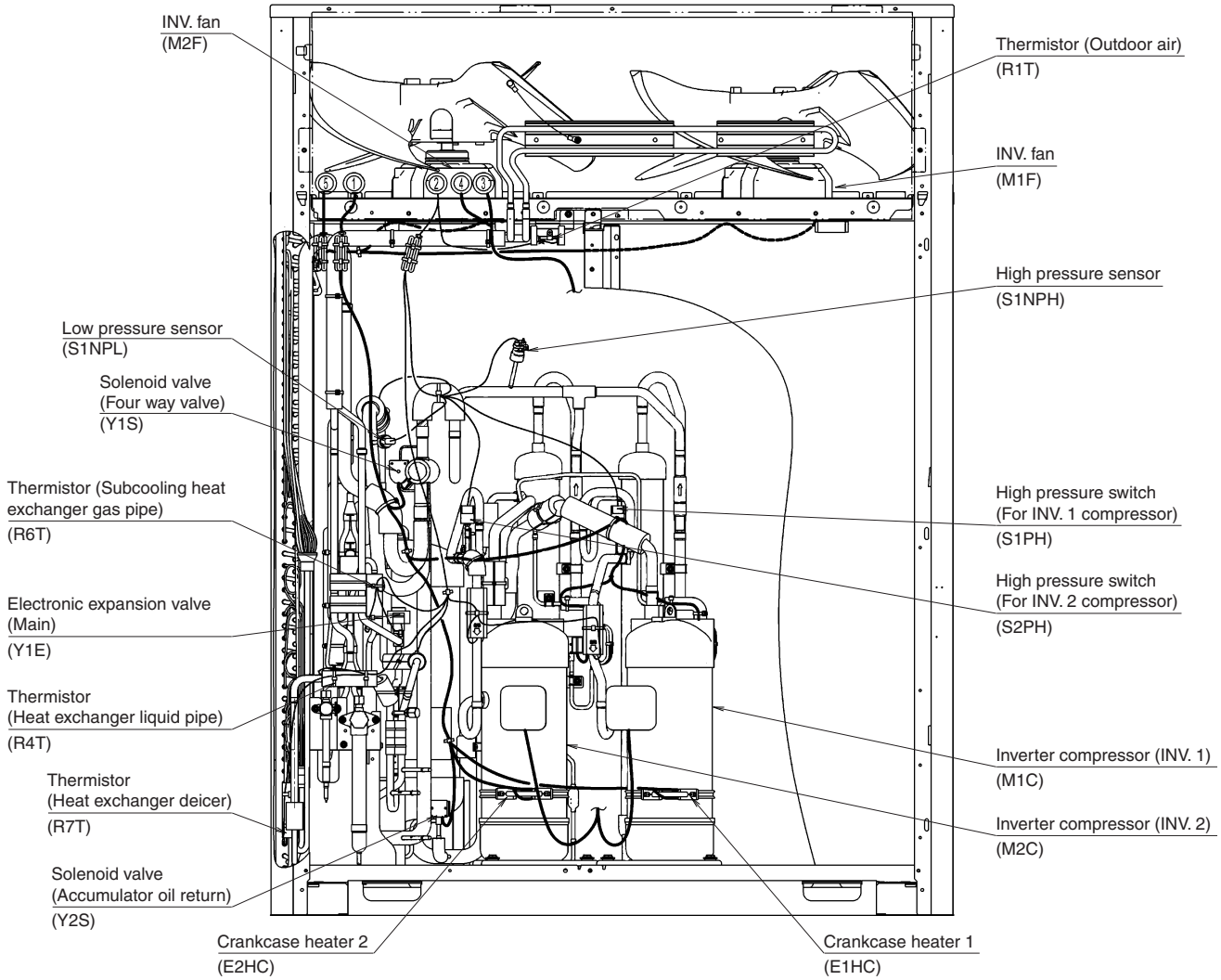

C: 1P363083A

2.4 RXYQ20TY1

Top View

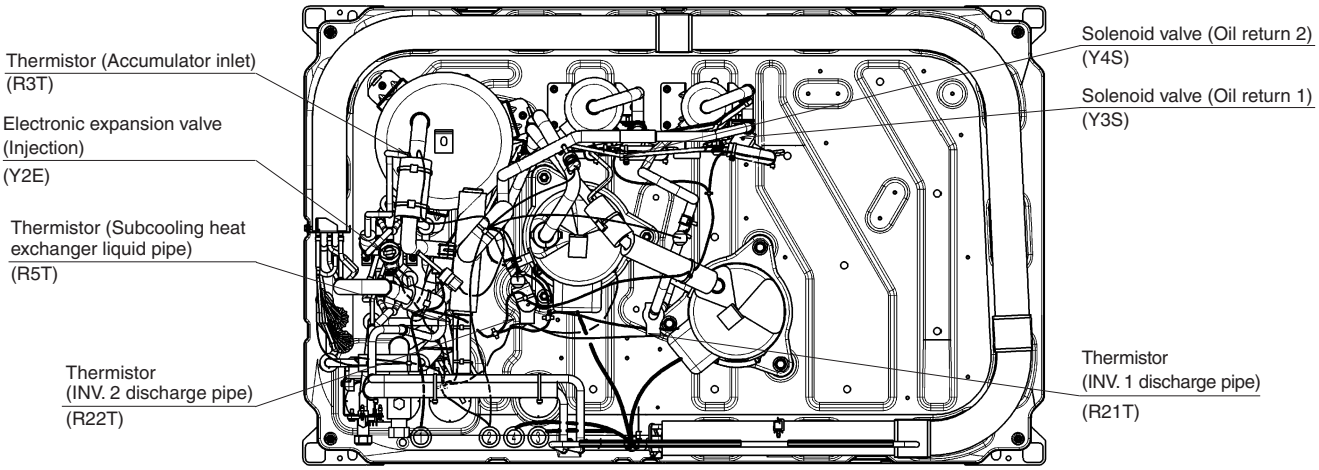

Front View

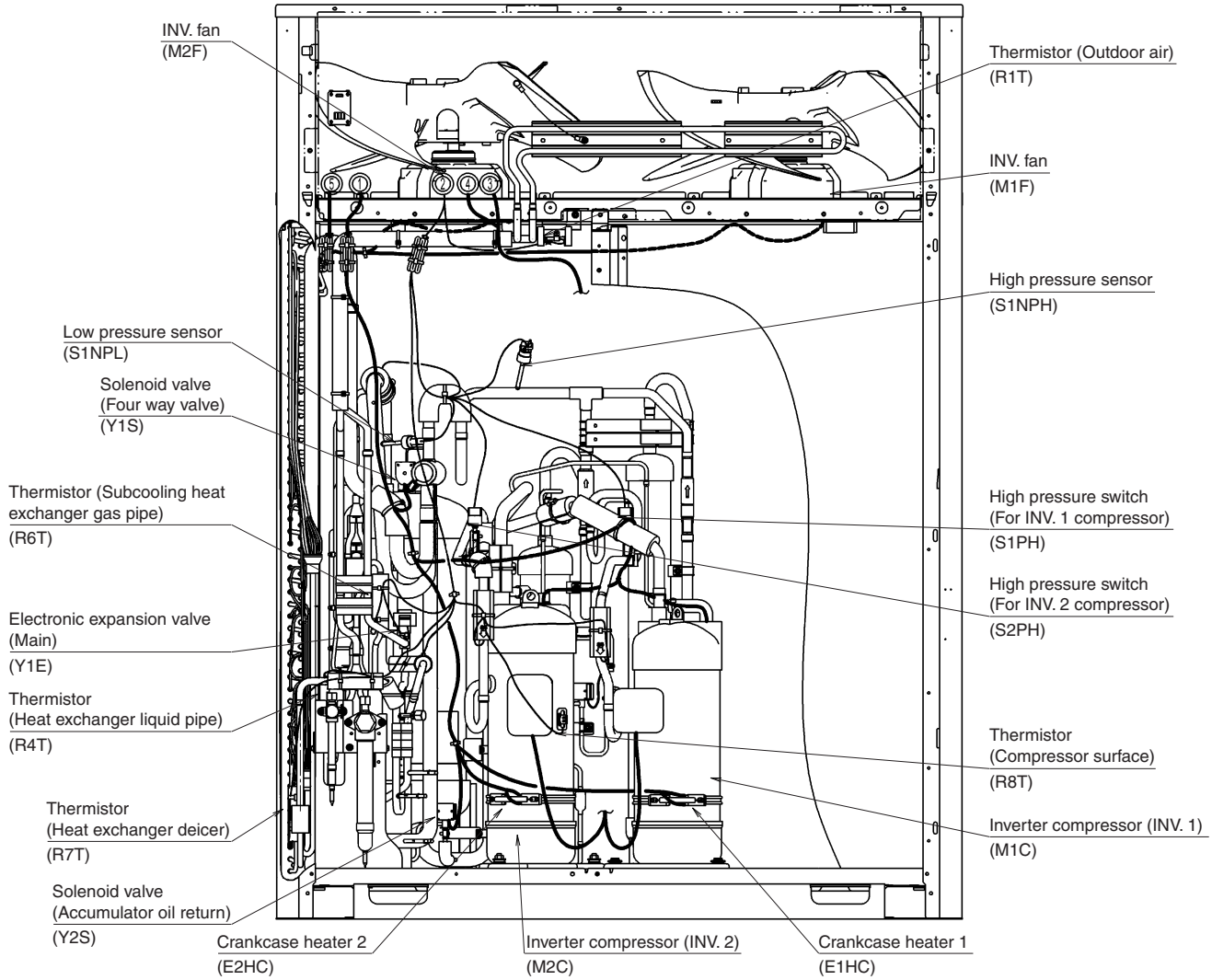

C: 1P363159A

3. Refrigerant Flow for Each Operation Mode

3.1 RXYQ6/8/10/12TY1

Cooling Operation

"High temperature, high pressure gas"
"High temperature, high pressure liquid"
"Low temperature, low pressure"

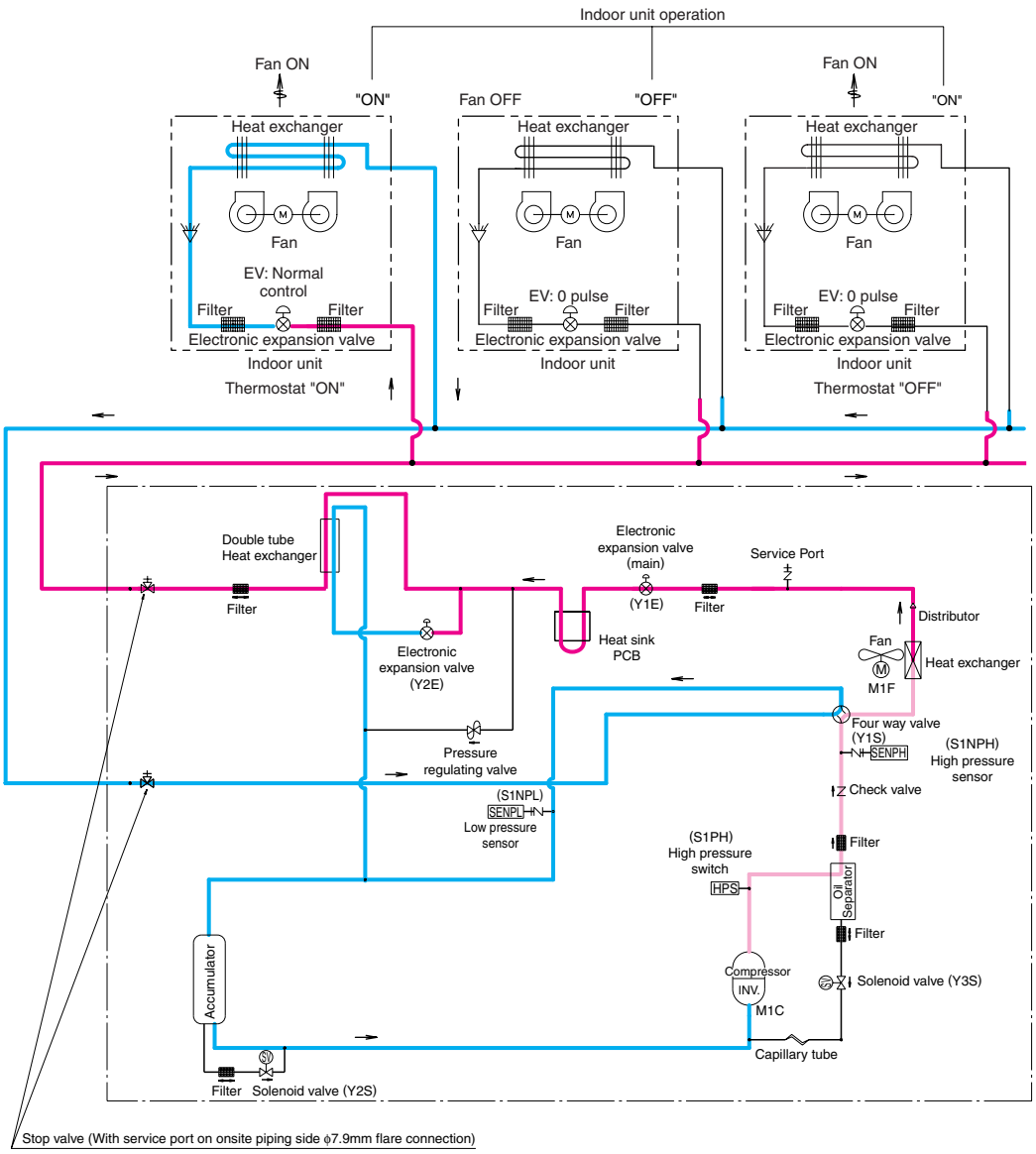

Cooling Oil Return Operation

"High temperature, high pressure gas"
"High temperature, high pressure liquid"
"Low temperature, low pressure"

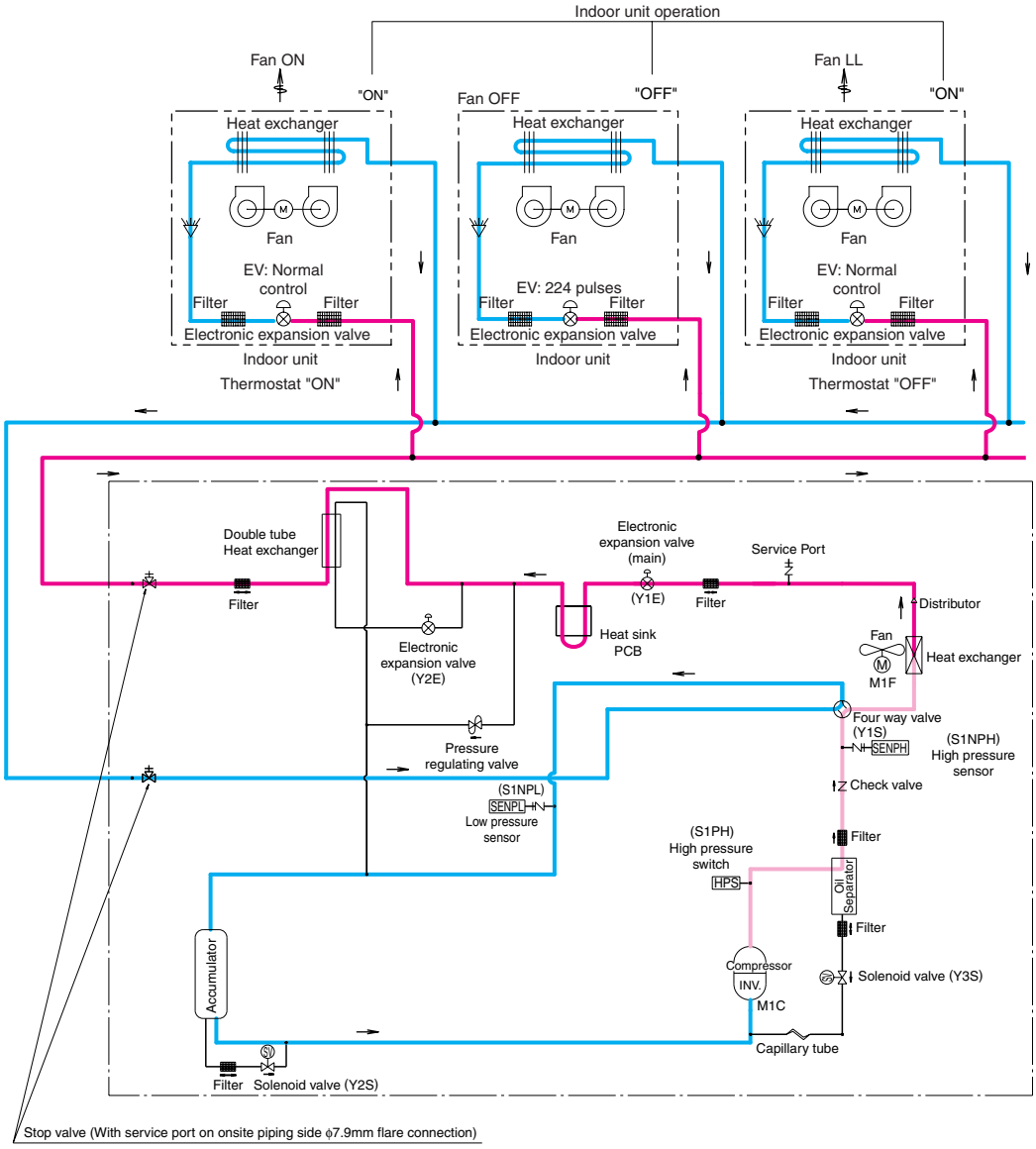

C: 3D085856

Heating Oil Return & Defrost Operation

"High temperature, high pressure gas"
"High temperature, high pressure liquid"
"Low temperature, low pressure"

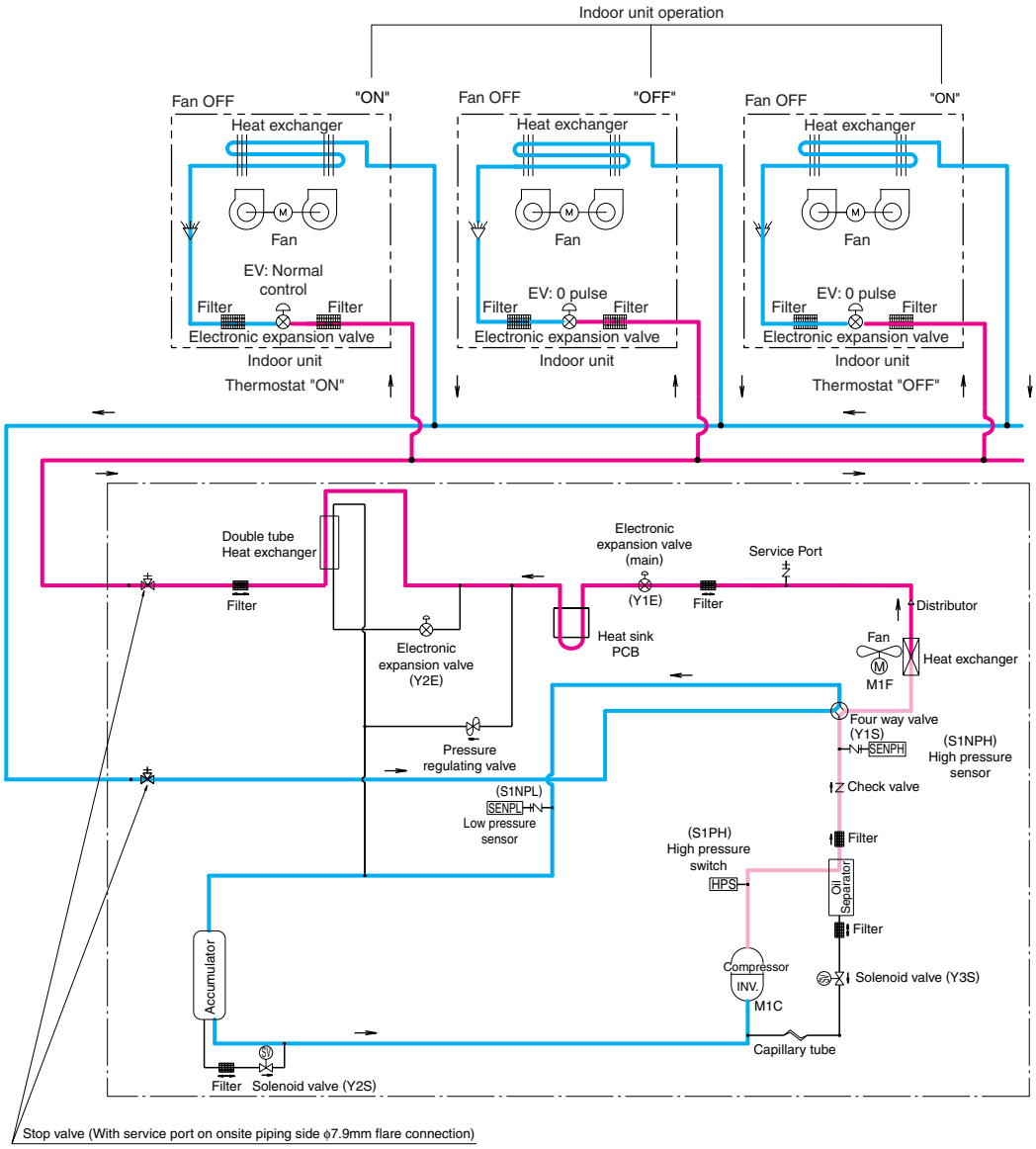

C: 3D085856

Heating operation

"High temperature, high pressure gas"
"High temperature, high pressure liquid"
"Low temperature, low pressure"

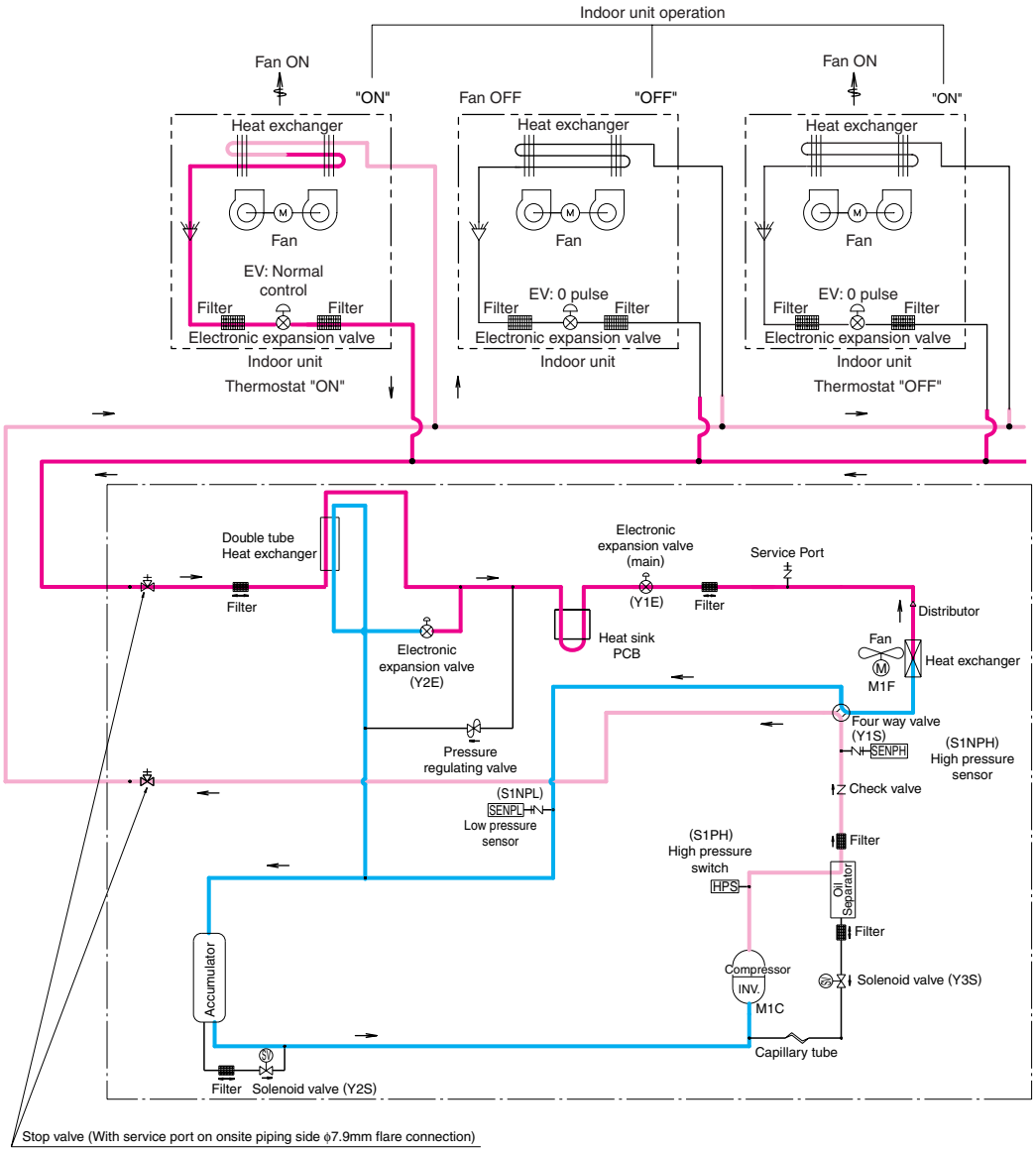

C: 3D085856

3.2 RXYQ14/16/18/20TY1

Cooling Operation

"High temperature, high pressure gas"
"High temperature, high pressure liquid"
"Low temperature, low pressure"

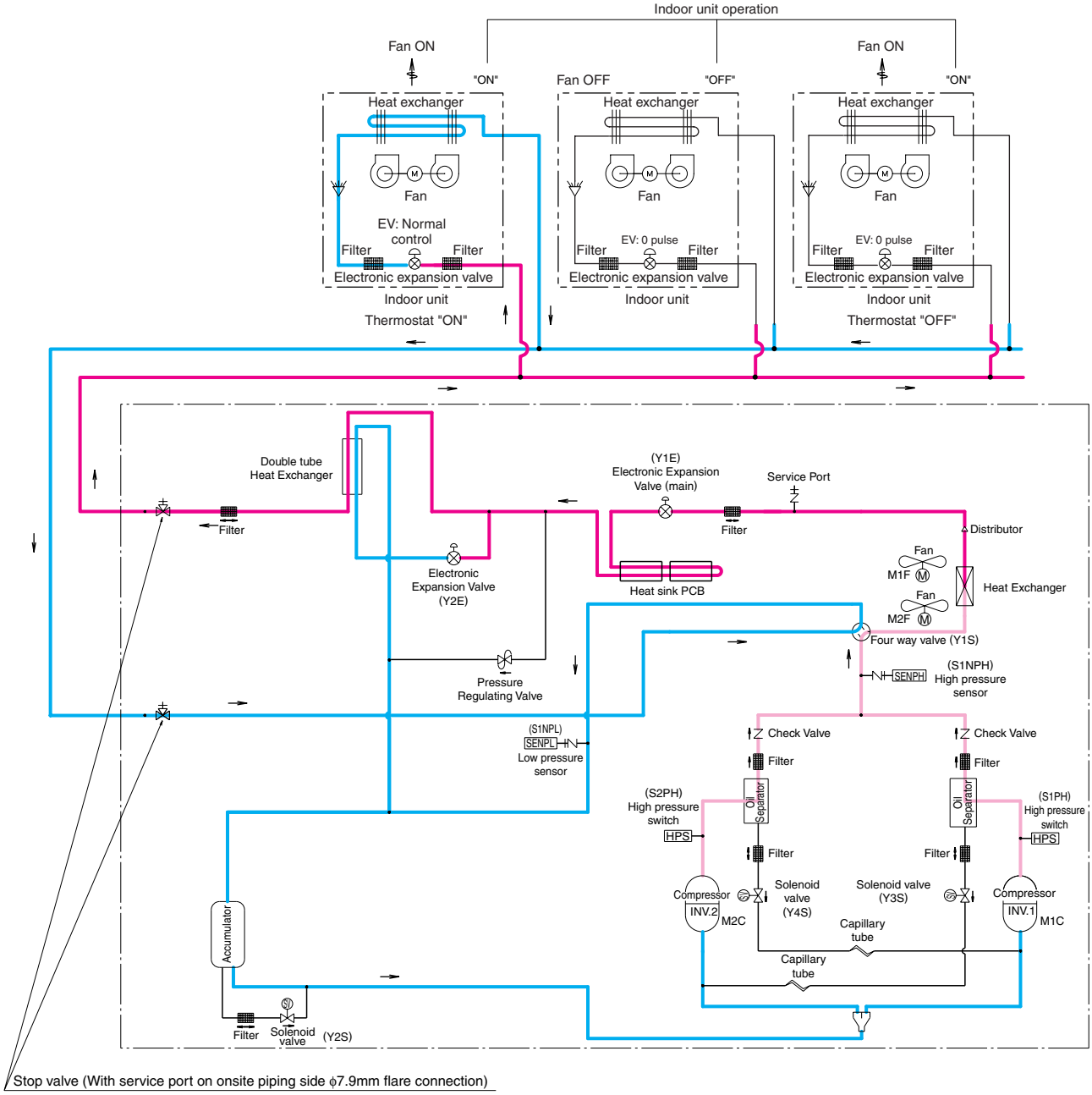

C: 3D085859A

Cooling Oil Return Operation

"High temperature, high pressure gas"
"High temperature, high pressure liquid"
"Low temperature, low pressure"

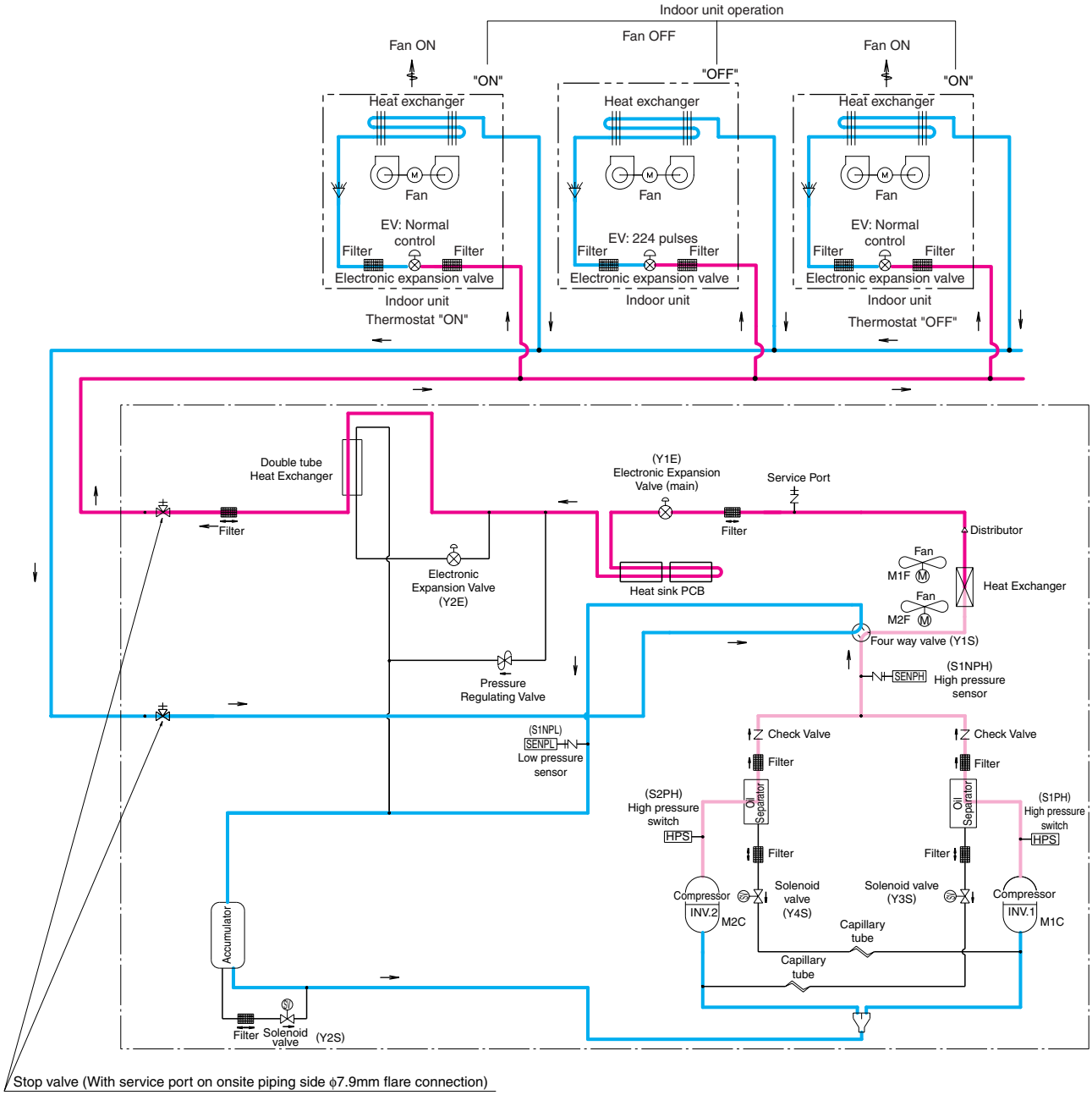

C: 3D085859A

Heating Oil Return & Defrost Operation

"High temperature, high pressure gas"
"High temperature, high pressure liquid"
"Low temperature, low pressure"

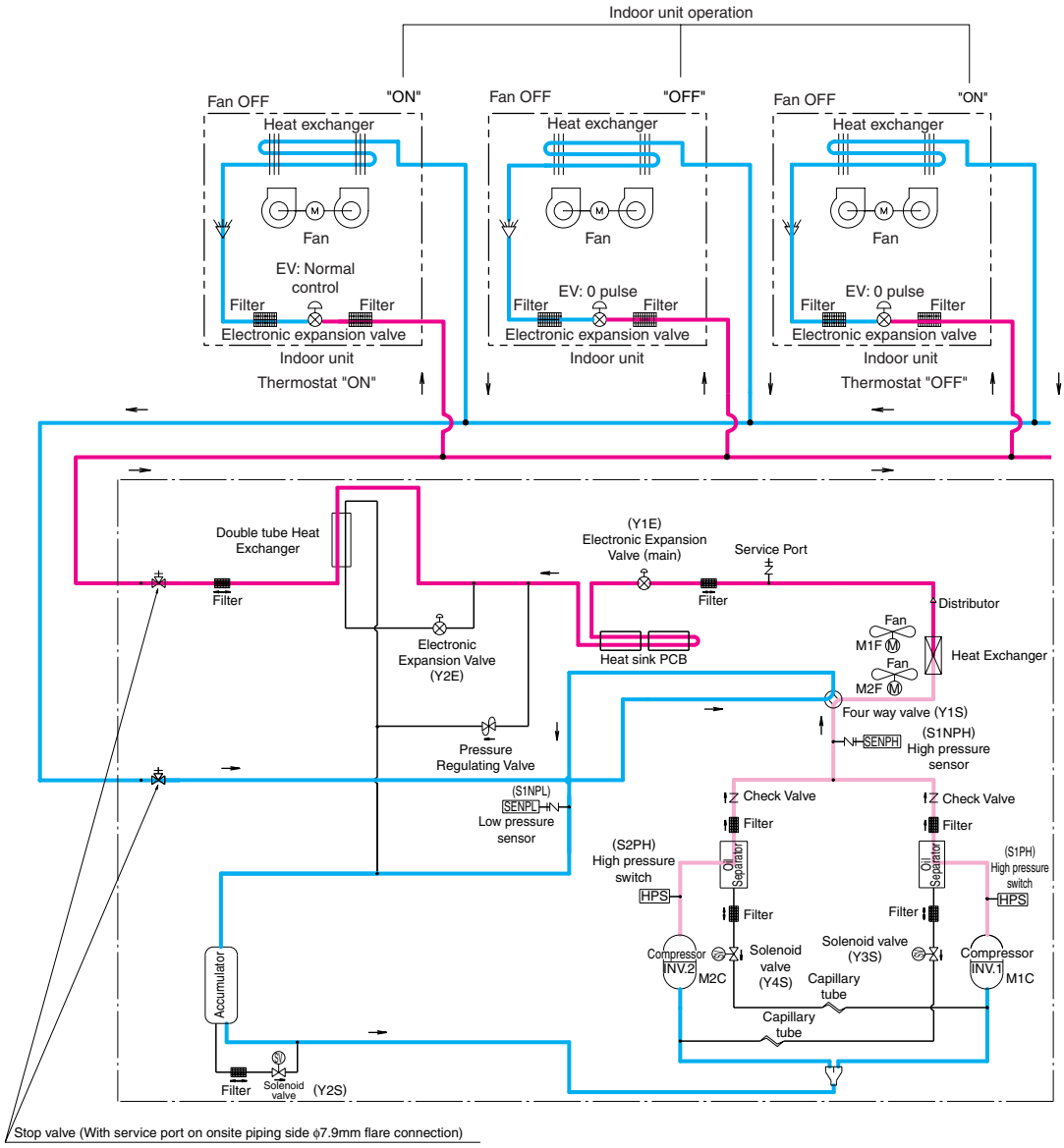

C: 3D085859A

Heating Operation

"High temperature, high pressure gas"
"High temperature, high pressure liquid"
"Low temperature, low pressure"

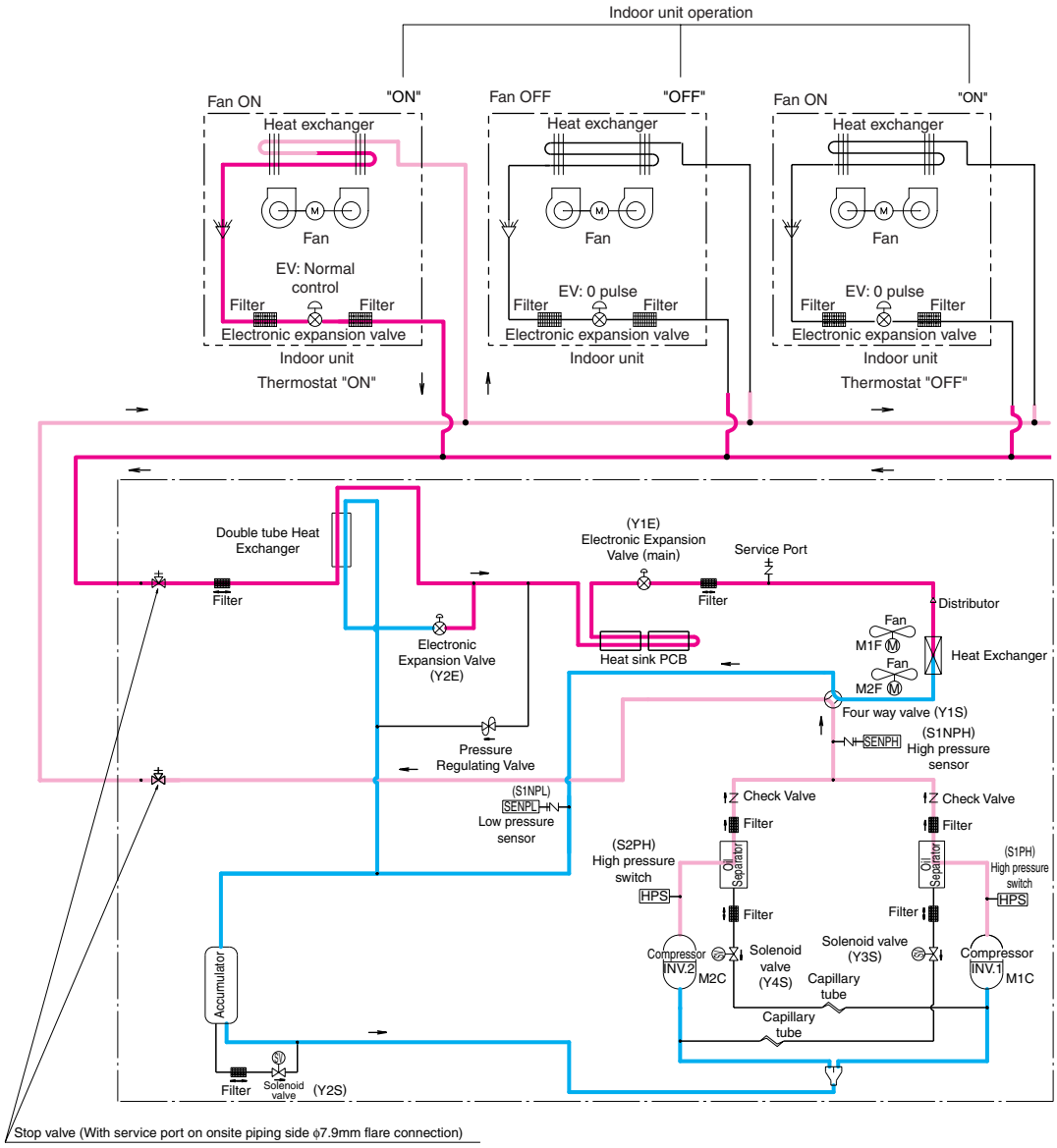

C: 3D085859A

Part 3
Remote Controller

1. Wired Remote Controller.....39
   1.1 Applicable Models 39
   1.2 Names and Functions 39
   1.3 MAIN/SUB Setting when Using 2 Remote Controllers 43
   1.4 Centralized Control Group No. Setting.....44
2. Wireless Remote Controller 46
   2.1 Applicable Models 46
   2.2 Names and Functions 46
   2.3 Address and MAIN/SUB Setting.....48
   2.4 Centralized Control Group No. Setting.....50
3. Service Mode 51
   3.1 BRC1C61/BRC1C62 51
   3.2 BRC1E62 53

1. Wired Remote Controller

1.1 Applicable Models

For *VRV* indoor unit use

Model Series	FXFQ-S FXFQ-LU	FXZQ-M	FXUQ-A	FXCQ-M	FXKQ-MA	FXDQ-PB FXDQ-NB	FXMQ-P	FXMQ-MA	FXHQ-MA	FXAQ-P	FXLQ-MA FXNQ-MA	FXVQ-M
Remote controller	BRC1C62											
Navigation remote controller (Wired remote controller)	BRC1E62											

For residential indoor unit use

Model Series	FCQ-B	FFQ-B	FBQ-B	CDXS-EA FDXS-C	FTXS-D FTXS-E FTXS-F
Remote controller	BRC1C61			—	

1.2 Names and Functions

1.2.1 BRC1C61/BRC1C62

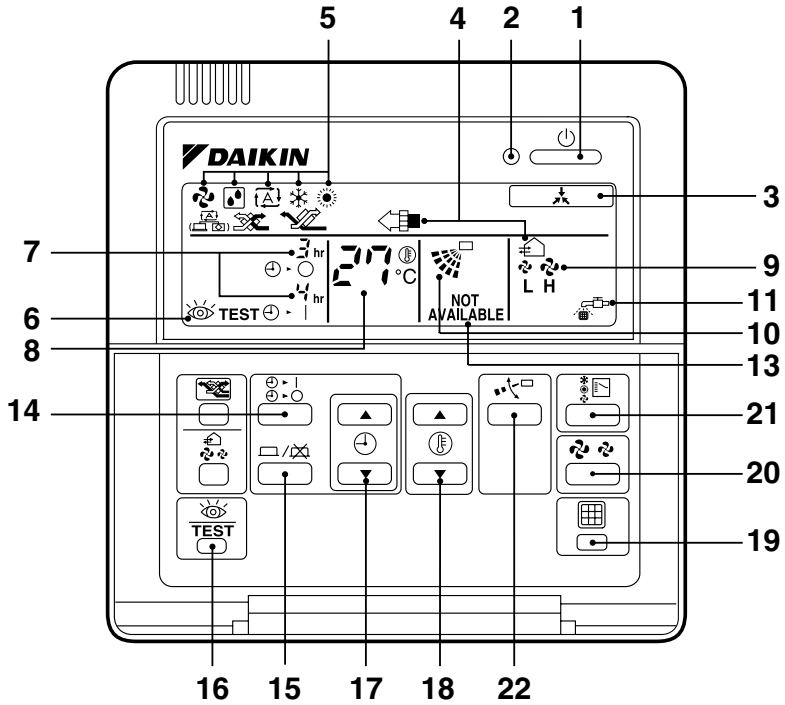

1	**ON/OFF BUTTON**
	Press the button and the system will start. Press the button again and the system will stop.
2	**OPERATION LAMP (RED)**
	The lamp lights up during operation.
3	**DISPLAY “ ” (UNDER CENTRALIZED CONTROL)**
	When this display shows, the system is UNDER CENTRALIZED CONTROL.
4	**DISPLAY “ ” “ ” “ ” “ ” (VENTILATION/AIR CLEANING)**
	This display shows that the total heat exchange and the air cleaning unit are in operation (These are optional accessories).
5	**DISPLAY “ ” “ ” “ ” “ ” “ ” (OPERATION MODE)**
	This display shows the current OPERATION MODE. For Cooling Only type, “ ” (Auto) and “ ” (Heating) are not installed.
6	**DISPLAY “ TEST ” (INSPECTION/TEST OPERATION)**
	When the INSPECTION/TEST OPERATION BUTTON is pressed, the display shows the system mode is in.
7	**DISPLAY “ ” (PROGRAMMED TIME)**
	This display shows the PROGRAMMED TIME of the system start or stop.
8	**DISPLAY “ ” (SET TEMPERATURE)**
	This display shows the set temperature.
9	**DISPLAY “ ” (FAN SPEED)**
	This display shows the set fan speed.
10	**DISPLAY “ ” (AIRFLOW FLAP)**
11	**DISPLAY “ ” (TIME TO CLEAN AIR FILTER)**

13	**NON-FUNCTIONING DISPLAY**
	If that particular function is not available, pressing the button may display the words “NOT AVAILABLE” for a few seconds. When running multiple units simultaneously the “NOT AVAILABLE” message will only be appear if none of the indoor units is equipped with the function. If even 1 unit is equipped with the function, the display will not appear.
14	**TIMER MODE START/STOP BUTTON**
15	**TIMER ON/OFF BUTTON**
16	**INSPECTION/TEST OPERATION BUTTON**
	This button is used only by qualified service persons for maintenance purposes.
17	**PROGRAMMING TIME BUTTON**
	Use this button for programming “START and/or STOP” time.
18	**TEMPERATURE SETTING BUTTON**
	Use this button for SETTING TEMPERATURE.
19	**FILTER SIGN RESET BUTTON**
20	**FAN SPEED CONTROL BUTTON**
	Press this button to select the fan speed, HIGH or LOW, of your choice.
21	**OPERATION MODE SELECTOR BUTTON**
	Press this button to select OPERATION MODE.
22	**AIRFLOW DIRECTION ADJUST BUTTON**

C: 3PA59583-16Z

1.2.2 BRC1E62

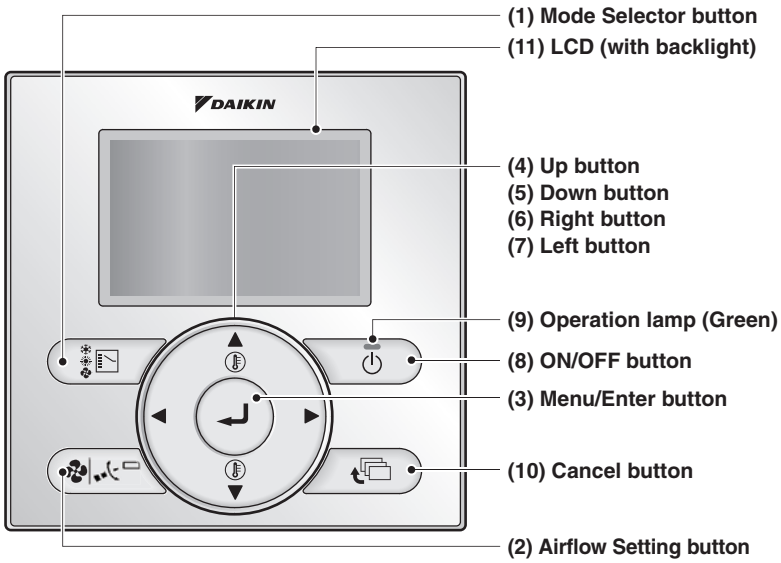

(1) Mode Selector button
Used to select the operation mode.

(2) Airflow Setting button
Used to indicate the Airflow Rate (Air Volume / Fan Speed) / Airflow Direction screen.

(3) Menu/Enter button
- Used to indicate the Main menu. (For details of Main menu, refer to the operation manual.)
- Used to enter the setting item selected.

Main menu

Airflow Direction
Quick Start
Ventilation
Energy Saving Options
Schedule
Filter Auto Clean
Maintenance Information
Configuration
Current Settings
Clock & Calendar
Language

∗ Depending on connected model

(4) Up button " ▲ "
- Used to raise the set temperature.
- Use to highlight the item above the current selection. (The highlighted items will be scrolled continuously when the button is kept pressed.)
- Used to change the item selected.

(5) Down button " ▼ "
- Used to lower the set temperature.
- Use to highlight the item below the current selection. (The highlighted items will be scrolled continuously when the button is kept pressed.)
- Used to change the item selected.

(6) Right button " ► "
- Used to highlight the next items on the right-hand side.
- Display contents are changed to next screen per page.

(7) Left button "◄ "

- Used to highlight the next items on the left-hand side.
- Display contents are changed to previous screen per page.

(8) ON/OFF button

- Press this button and system will start.
- Press this button again and system will stop.

(9) Operation lamp (Green)

This lamp lights up during operation. The lamp blinks if an error occurs.

(10) Cancel button

- Used to return to the previous screen.
- Press and hold this button for 4 seconds or more to display Service Settings menu.

(11) LCD (with backlight)

The backlight will be lit for approximately 30 seconds by pressing any operation button.

Service Settings menu

Test Operation
Maintenance Contact
Field Settings
Min Setpoints Differential
Group Address
Indoor unit AirNet Address
Outdoor unit AirNet Address
Error History
Indoor Unit Status
Outdoor Unit Status
Forced Fan ON
Switch Main Sub Controller
Filter Indicator
Test Filter Auto Clean
Brush/Filter Ind.
Disable Filter Auto Clean

∗ Depending on connected model

1.3 MAIN/SUB Setting when Using 2 Remote Controllers

Situation

The MAIN/SUB setting is necessary when 1 indoor unit is controlled by 2 remote controllers. When you use 2 remote controllers (control panel and separate remote controller), set one to MAIN and the other to SUB.

Setting

The remote controllers are factory setting to MAIN, so you only have to change one remote controller from MAIN to SUB. To change a remote controller from MAIN to SUB, proceed as follows:

1.3.1 BRC1C61/BRC1C62

Step	Action
1	Insert a flat-head screwdriver into the recess between the upper and lower part of the remote controller, as shown in the illustration below. Gently pry off the upper part of the controller, working from the 2 possible positions. 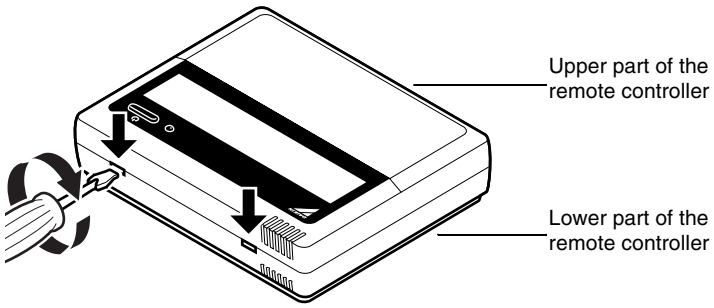
2	Turn the MAIN/SUB changeover switch on the PCB to “S”. 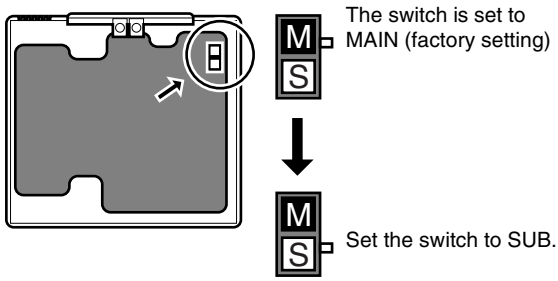

1.3.2 BRC1E62

The designation of the main and sub remote controllers can be swapped. Note that this change requires turning the power OFF and then ON again.

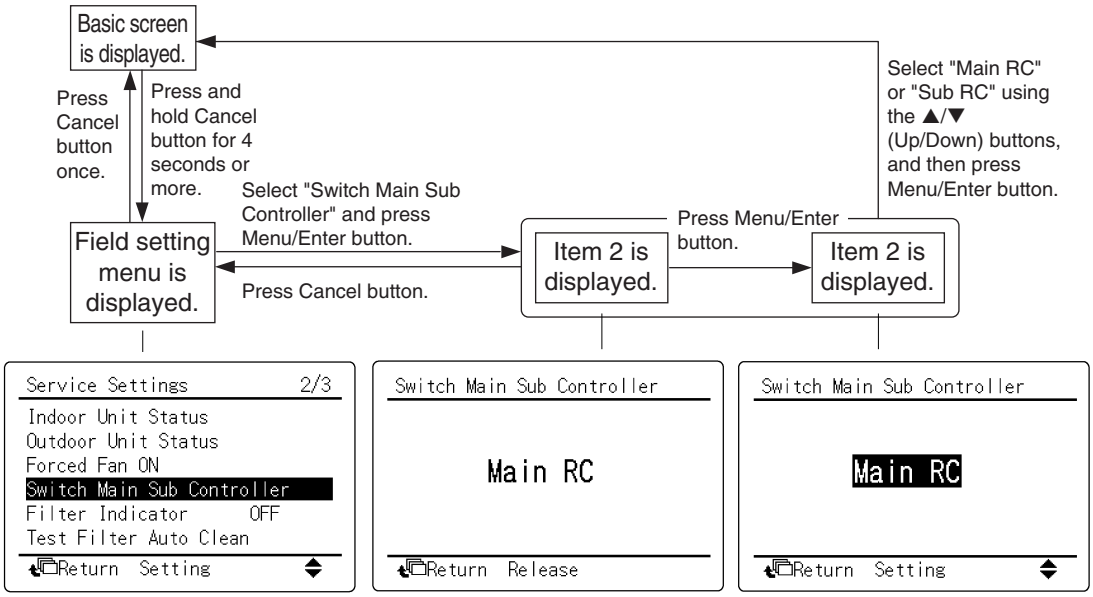

1.4 Centralized Control Group No. Setting

1.4.1 BRC1C61/BRC1C62

In order to conduct the centralized remote control using the central remote controller and the unified ON/OFF controller, Group No. settings should be made by group using the operating remote controller.
Make Group No. settings for centralized remote control using the operating remote controller.

1. While in normal mode, press and hold the " TEST " switch for a period of 4 seconds or more to set the system to "Field Setting Mode".
2. Select the MODE No. "20" with the " " button.
3. Use the " " button to select the group No. for each group.
   (Group numbers increase in the order of 1-00, 1-01, ... 1-15, 2-00, ... 4-15.)
4. Press " " or " " to set the selected group No.
5. Press " TEST " to return to the NORMAL MODE.

BRC1C62

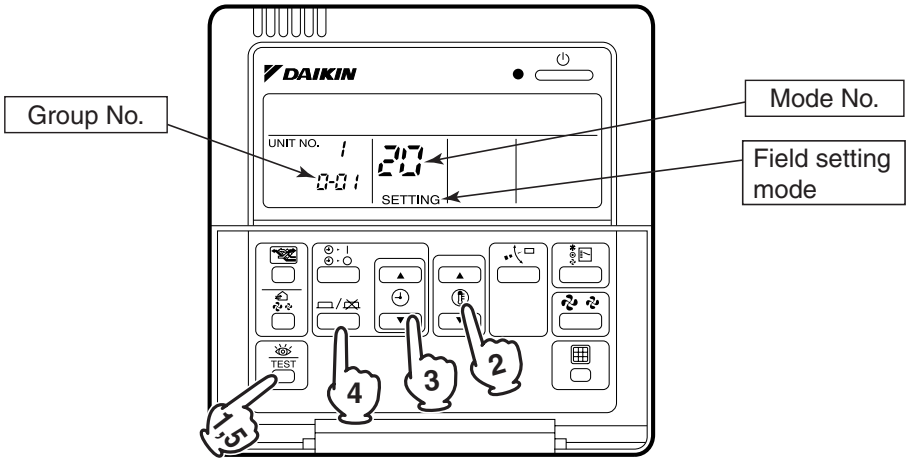

Note: 1. For setting group No. of Heat Reclaim Ventilator and wiring adaptor for other air conditioners, etc., refer to the operation manual attached.

NOTICE
Enter the group No. and installation place of the indoor unit into the attached installation table.
Be sure to keep the installation table with the operation manual for maintenance.

1.4.2 BRC1E62

<Group No. Setting (Group)>

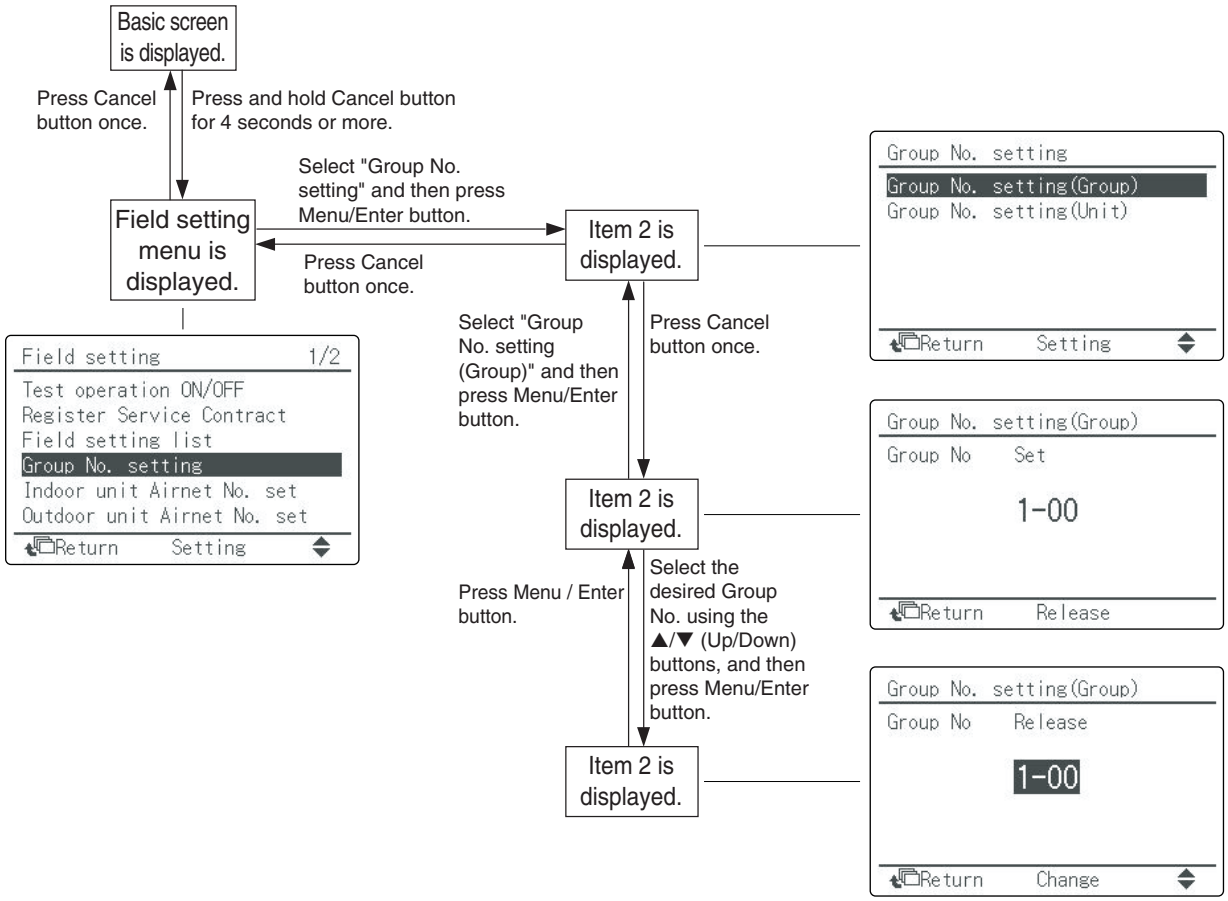

<Group No. Setting (Unit)>

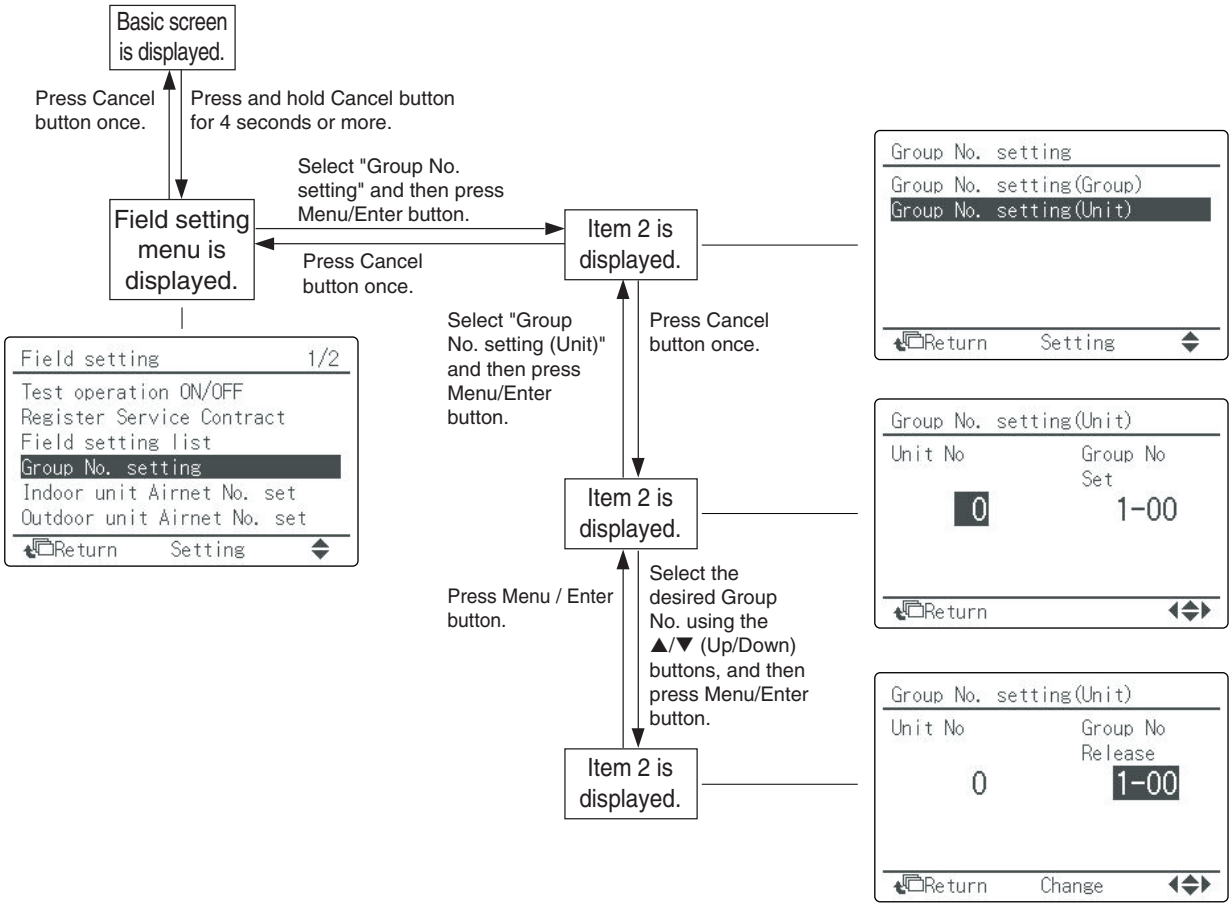

2. Wireless Remote Controller

2.1 Applicable Models

For *VRV* indoor unit use

Model Series	FXFQ-S FXFQ-LU	FXZQ-M	FXUQ-A	FXCQ-M	FXKQ-MA	FXDQ-PB FXDQ-NB	FXMQ-P	FXMQ-MA	FXHQ-MA	FXAQ-P	FXLQ-MA FXNQ-MA	FXVQ-M
Remote controller	BRC7F634F	BRC7E530W	BRC7CB58	BRC4C62	BRC4C61	BRC4C65	BRC4C65	BRC4C62	BRC7EA63W	BRC7EA618	BRC4C62	—

For residential indoor unit use

Model Series	FCQ-B	FFQ-B	FBQ-B	CDXS-EA FDXS-C	FTXS-D FTXS-E FTXS-F
Remote controller	BRC7C612W	BRC7E530W	—	— ∗1	

Note: ∗1. A wireless remote controller is a standard accessory for C(F)DXS and FTXS models.

2.2 Names and Functions

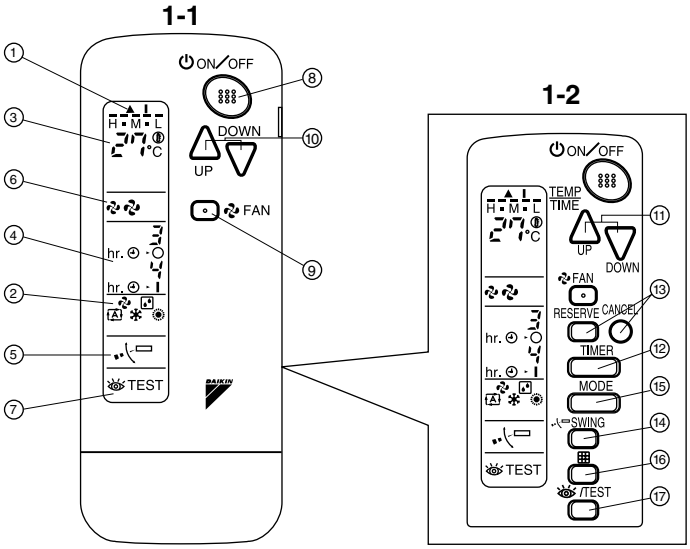

3P107422-11J

1	**DISPLAY " ▲ " (SIGNAL TRANSMISSION)**
	This lights up when a signal is being transmitted.
2	**DISPLAY " " " " " " " " (OPERATION MODE)**
	This display shows the current OPERATION MODE. For Cooling Only type, " " (Auto) and " " (Heating) are not installed.
3	**DISPLAY " " (SET TEMPERATURE)**
	This display shows the set temperature.
4	**DISPLAY " hr. hr. " (PROGRAMMED TIME)**
	This display shows PROGRAMMED TIME of the system start or stop.
5	**DISPLAY " " (AIRFLOW FLAP)**
6	**DISPLAY " " " " (FAN SPEED)**
	The display shows the set fan speed.
7	**DISPLAY " TEST " (INSPECTION/TEST OPERATION)**
	When the INSPECTION/TEST OPERATION BUTTON is pressed, the display shows the system mode is in.
8	**ON/OFF BUTTON**
	Press the button and the system will start. Press the button again and the system will stop.
9	**FAN SPEED CONTROL BUTTON**
	Press this button to select the fan speed, HIGH or LOW, of your choice.
10	**TEMPERATURE SETTING BUTTON**
	Use this button for SETTING TEMPERATURE (Operates with the front cover of the remote controller closed.)
11	**PROGRAMMING TIMER BUTTON**
	Use this button for programming "START and/or STOP" time. (Operates with the front cover of the remote controller opened.)
12	**TIMER MODE START/STOP BUTTON**
13	**TIMER RESERVE/CANCEL BUTTON**

14	**AIRFLOW DIRECTION ADJUST BUTTON**
15	**OPERATION MODE SELECTOR BUTTON**
	Press this button to select OPERATION MODE.
16	**FILTER SIGN RESET BUTTON**
	Refer to the section of MAINTENANCE in the operation manual attached to the indoor unit.
17	**INSPECTION/TEST OPERATION BUTTON**
	This button is used only by qualified service persons for maintenance purposes.
18	**EMERGENCY OPERATION SWITCH**
	This switch is readily used if the remote controller does not work.
19	**RECEIVER**
	This receives the signals from the remote controller.
20	**OPERATING INDICATOR LAMP (Red)**
	This lamp stays lit while the air conditioner runs. It flashes when the unit is in trouble.
21	**TIMER INDICATOR LAMP (Green)**
	This lamp stays lit while the timer is set.
22	**AIR FILTER CLEANING TIME INDICATOR LAMP (Red)**
	Lights up when it is time to clean the air filter.
23	**DEFROST LAMP (Orange)**
	Lights up when the defrosting operation has started. (For Cooling Only type this lamp does not turn ON.)

NOTES

- For the sake of explanation, all indications are shown on the display in Fig. 1-1 contrary to actual running situations.
- Fig. 1-2 shows the remote controller with the front cover opened.
- If the air filter cleaning time indicator lamp lights up, clean the air filter as explained in the operation manual provided with the indoor unit.
  After cleaning and reinstalling the air filter, press the filter sign reset button on the remote controller. The air filter cleaning time indicator lamp on the receiver will go out.
- The Defrost Lamp will blink when the power is turned ON. This is not an error.

C: 3P107422-11J

2.3 Address and MAIN/SUB Setting

Introduction

To set the wireless remote controller, you have to set the address for:

- The receiver of the wireless remote controller
- The wireless remote controller.

Setting the Address for the Receiver

The address for the receiver of the wireless remote controller is factory setting to 1. To change this setting, proceed as follows:

Set the wireless address switch (SS2) on the PCB according to the table below.

Unit No.	No. 1	No. 2	No. 3
Wireless address switch (SS2)	1 2 3	1 2 3	1 2 3

When using both a wired and a wireless remote controller for 1 indoor unit, the wired controller should be set to MAIN. Therefore, set the MAIN/SUB switch (SS1) of the receiver to SUB.

MAIN/SUB	MAIN	SUB
MAIN/SUB switch (SS1)	S M	S M

Setting the Address for the Wireless Remote Controller

The address for the wireless remote controller is factory setting to 1. To change this setting, proceed as follows:

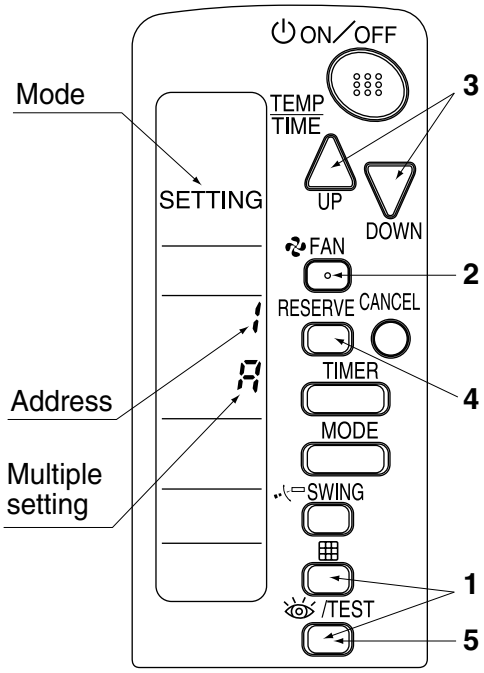

1. Hold down the " ▦ " button and the " /TEST " button for at least 4 seconds to get the field setting mode. (Indicated in the display area in the figure at right.)
2. Press the " FAN " button and select a multiple setting (A/b). Each time the button is pressed the display switches between "A" and "b".
3. Press the " △ UP " button or " ▽ DOWN " button to set the address.

   →1→2→3→4→5→6

   Address can be set from 1 to 6, but set it to 1 ~ 3 and to same address as the receiver. (The receiver does not work with address 4 ~ 6.)
4. Press the " RESERVE " button to enter the setting.
5. Hold down the " /TEST " button for at least 1 second to quit the field setting mode and return to the normal display.

Multiple Settings A/b

When the indoor unit is being operating by external control (central remote controller, etc.), it sometimes does not respond to ON/OFF and temperature setting commands from this remote controller. Check what setting the customer wants and make the multiple setting as shown below.

Remote controller		Movement when the operation is controlled by the other air conditioners and equipment
Multiple setting	Remote controller display	
A: Standard	All items displayed.	When operation changeover, temperature setting or the like is carried out from the remote controller, the indoor unit rejects the instruction. (Signal receiving sound “peeh” or “pick-pick-pick”) As a result, a discrepancy between the operation state of the indoor unit and the indication of the remote controller display occurs.
b: Multi System	Operations remain displayed shortly after execution.	Since the indication of the remote controller is turned OFF, no discrepancy such as mentioned above occurs.

2.4 Centralized Control Group No. Setting

1. When in the normal mode, press " /TEST " button for 4 seconds or more, and operation then enters the "field setting mode".
2. Set mode No. "00" with " MODE " button.
3. Set the group No. for each group with " UP " " DOWN " button.
4. Enter the selected group numbers by pressing " RESERVE " button.
5. Press " /TEST " button and return to the normal mode.

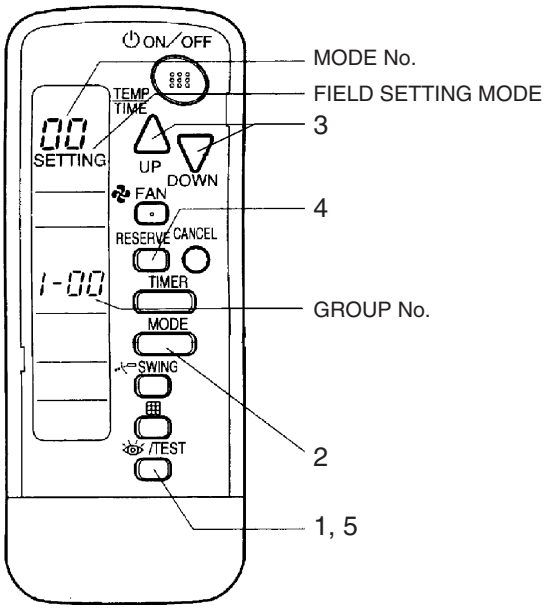

Example

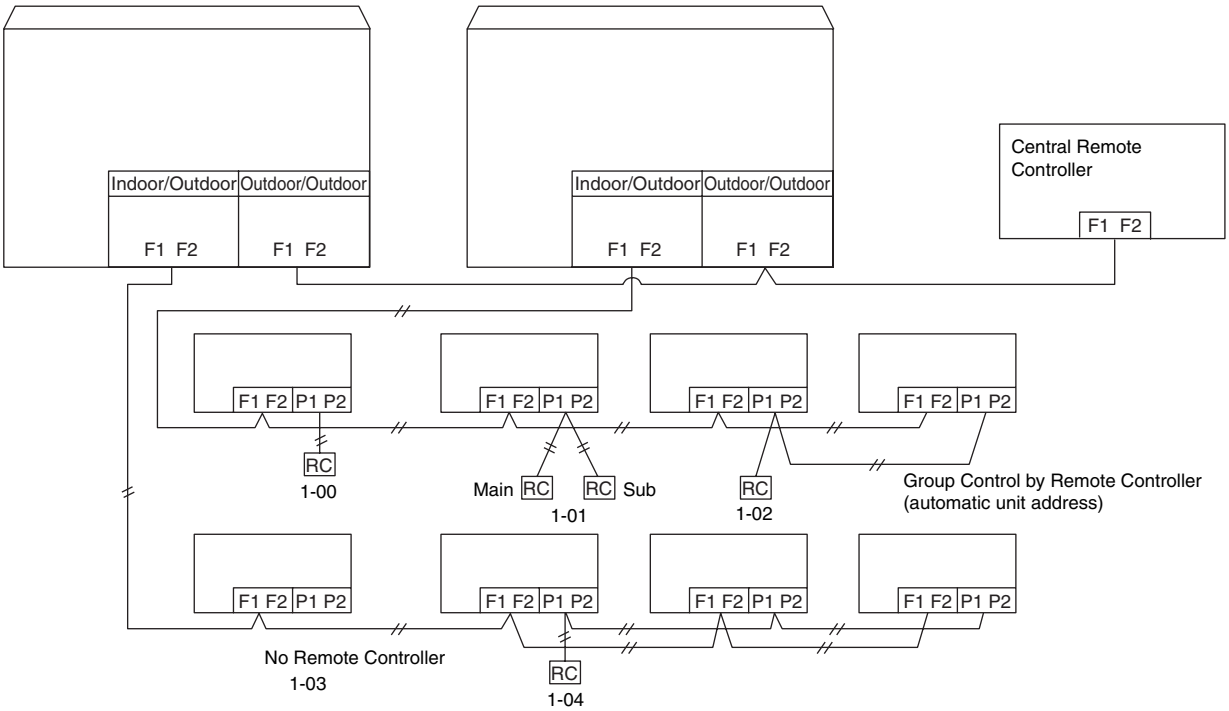

Caution When turning the power supply ON, the unit may often not accept any operation while "88" is displaying after all indications were displayed once for about 1 minute on the liquid crystal display. This is not an operative fault.

3. Service Mode

3.1 BRC1C61/BRC1C62

3.1.1 Display Service Data

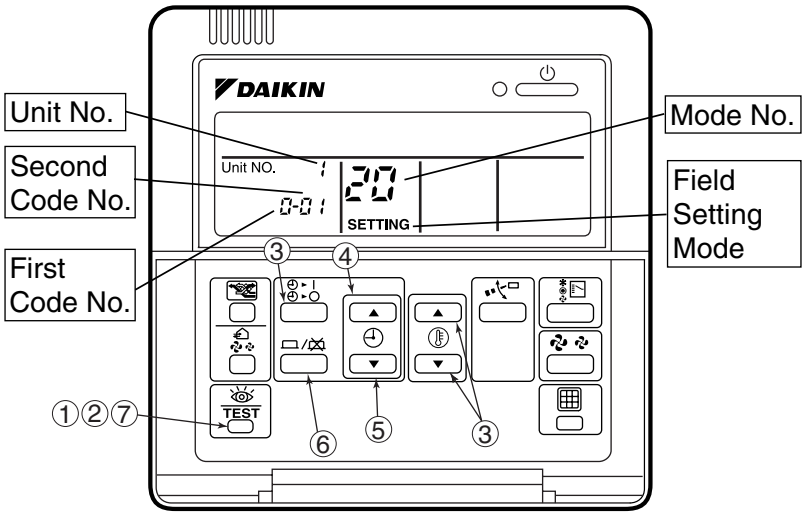

1. Enter the field setting mode.
   Press the INSPECTION/TEST operation button for 4 seconds or more.
2. Enter the service mode.
   After having entered the field setting mode, press the INSPECTION/TEST operation button for 4 seconds or more.
3. Select the mode No.
   Set the desired mode No. with the UP/DOWN temperature setting button.
4. Select the unit No.
   Select the indoor unit No. set with the time mode START/STOP button.
5. Select the desired error history No. or sensor data No. with "▲" or "▼" button.
6. Each data displays (Refer to the table below display)
7. Return to the normal operation mode.
   Press the INSPECTION/TEST operation button once.

Mode No.	Function	Content and Operation Method	Example of Remote Controller Display
40	Error History	You can change the history with the programming time UP-DOWN button.	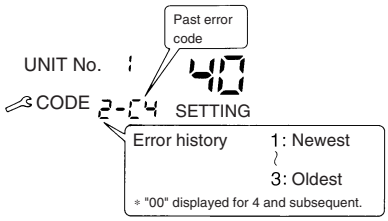
41	Sensor Data Display	Select the display thermistor with the programming time UP-DOWN button Display thermistor 0 Remote controller thermistor 1 Suction air thermistor 2 Heat exchanger thermistor	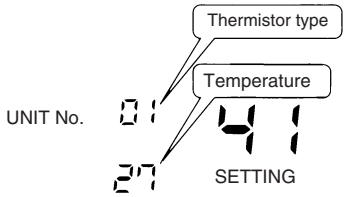

3.1.2 Service Setting

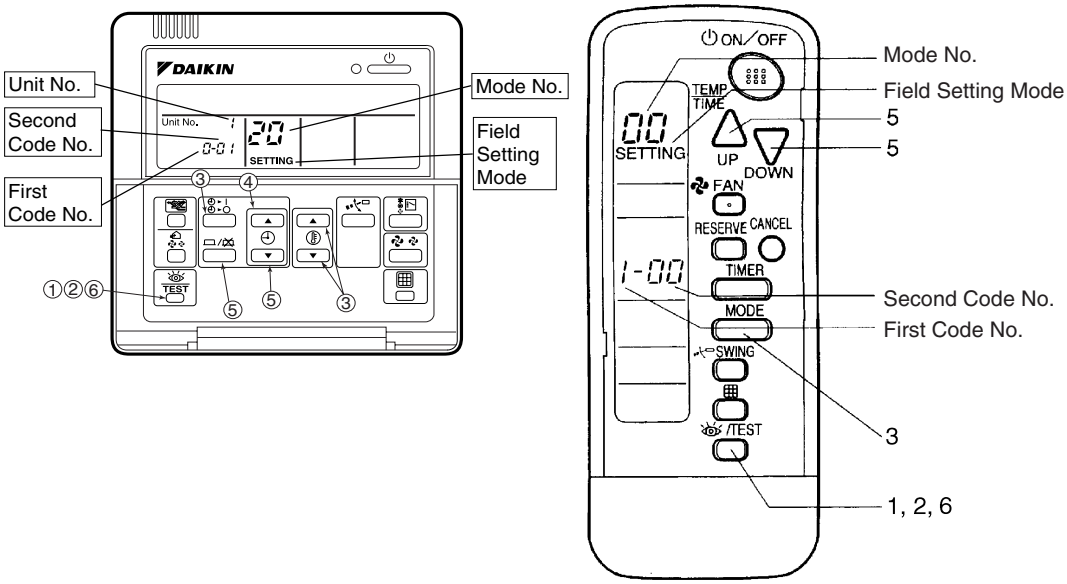

1. Enter the field setting mode.
   Continue to press the INSPECTION/TEST operation button for a minimum of 4 seconds.
2. Enter the maintenance mode.
   After having entered the field setting mode, continue to press the INSPECTION/TEST operation button for a minimum of 4 seconds.
3. Select the mode No.
   Set the desired mode No. with the UP/DOWN temperature setting button.
4. Select the unit No.
   Select the indoor unit No. set with the time mode ON/OFF button.
5. Carry out the necessary settings for each mode. (Mode 43 only possible for wireless remote controller)
   - In case of Mode 43
     Press timer ON/OFF button to decide the forced Fan ON.
   - In case of Mode 44
     Set “Fan speed” with fan speed control button and “Airflow direction” with airflow direction adjusting button, then press timer ON/OFF button to decide.
   - In case of Mode 45
     Select the changed unit No. with “ ” or “ ” button, then press timer ON/OFF button to decide.
6. Return to the normal operation mode.
   Press the INSPECTION / TEST operation button once.

Mode No.	Function	Content and Operation Method	Example of Remote Controller Display
43	Forced Fan ON	Turns the fan ON for each unit individually.	UNIT No. 1 43 SETTING
44	Individual Setting	Sets fan speed and airflow direction for each unit individually when using group control.	Fan speed 1: Low 3: High; 0: Upper 4: Lowest; Airflow direction; UNIT No. 1; 44; CODE 0; SETTING
		Settings are made using the “airflow direction adjust” and “fan speed adjust” buttons.	
45	Unit No. Change	Changes unit No.	Field setting No.; No. after change; UNIT No. 1; 45; CODE 02; SETTING
		Set the unit No. after changing with the programming time UP-DOWN button.	

3.2 BRC1E62

Operating the remote controller allows service data to be acquired and various services to be set.

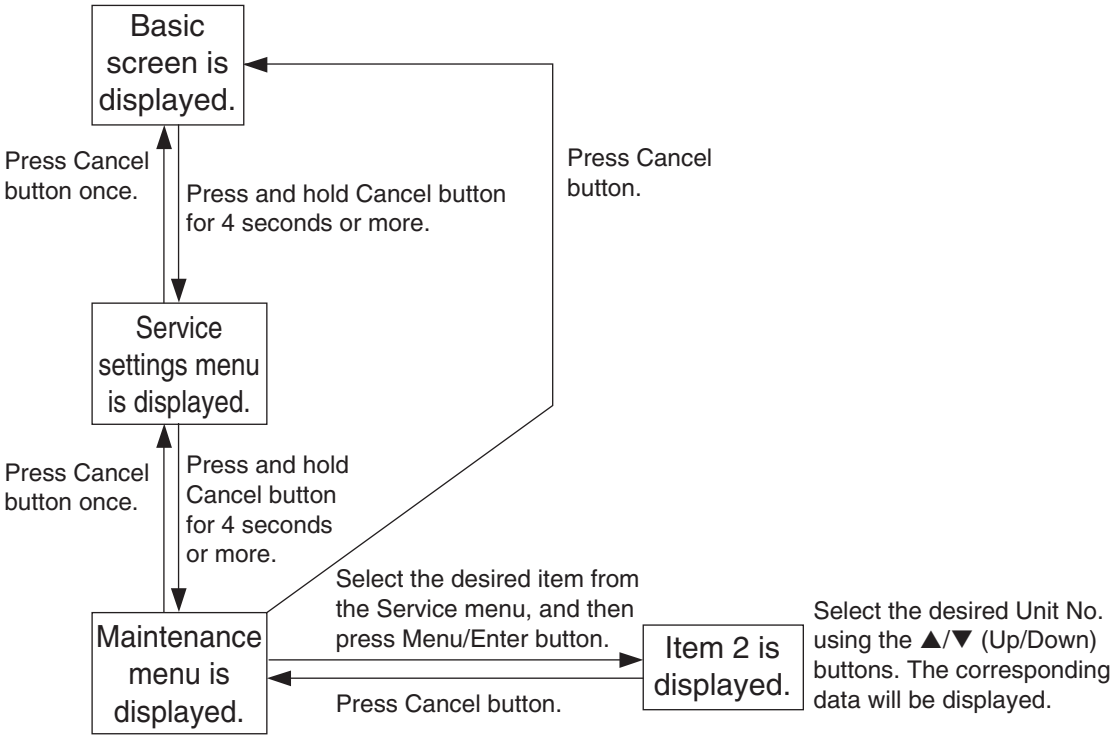

Maintenance Menu	Item 2	Remarks
2-1. Model Name	1. Unit No.	Select the Unit No. you want to check.
	2. Indoor unit	
	3. Outdoor unit	
2-2. Operation Hours	1. Unit No.	Select the Unit No. you want to check.
	2. Indoor unit operation hours	All of these are displayed in hours.
	3. Indoor unit fan operation hours	
	4. Indoor unit energized time	
	5. Outdoor operation hours	
	6. Outdoor unit fan 1 operation hours	
	7. Outdoor unit fan 2 operation hours	
	8. Outdoor comp. 1 operation hours	
	9. Outdoor comp. 2 operation hours	
2-3. Indoor Unit Status 1/3	1. Unit No.	Select the Unit No. you want to check.
	2. FAN	Tap, speed (rpm)
	3. FLAP	Swing, fixed
	4. Speed	Fan speed (rpm)
	5. EV	Degree that electronic expansion valve is open (pulse)
	6. MP	Drain pump ON/OFF
	7. 52H	Electric heater ON/OFF
	8. Hu	Humidifier ON/OFF
	9. TBF	Anti-freezing control ON/OFF
2-3. Indoor Unit Status 2/3	1. Unit No.	Select the Unit No. you want to check.
	2. FLOAT	FLOAT SWITCH ON/OFF
	3. T1/T2	T1/T2 input from outside ON/OFF

Maintenance Menu	Item 2	Remarks
2-3. Indoor Unit Status 3/3	1. Unit No.	Select the Unit No. you want to check.
	2. Th1	Suction air thermistor ∗1
	3. Th2	Heat exchanger liquid pipe thermistor
	4. Th3	Heat exchanger gas pipe thermistor
	5. Th4	Discharge air thermistor ∗2
	6. Th5	Infrared floor sensor ∗3
	7. Th6	Control temperature ∗4
2-4. Outdoor Unit Status	1. Unit No.	Select the Unit No. you want to check.
	2. FAN step	Fan tap
	3. COMP	Compressor power supply frequency (Hz)
	4. EV1	Degree that electronic expansion valve is open (pulse)
	5. SV1	Solenoid valve ON/OFF
	6. Th1	—
	7. Th2	—
	8. Th3	—
	9. Th4	—
	10.Th5	—
	11.Th6	—
2-5. Error Display	1. Warning display ON	Displays a warning on the screen if an error occurs.
	2. Warning display OFF	No warning is displayed.
	3. Error display ON	Displays the error on the screen.
	4. Error display OFF	Displays neither errors nor warnings.
2-6. Swap Unit No.	1. Current Unit No.	A unit No. can be transferred to another.
	2. Transfer Unit No.	
2-7. Addressed Sensor Value	○ Unit No.: 0 - 15	Select the Unit No. you want to check.
	○ Code 00: 01: 02: 03: 04: 05: 06: 07: 08: 09: 22: 23: 24: 25: 26:	 Remote controller thermistor (°C) Suction air thermistor (°C) ∗5 Heat exchanger liquid pipe thermistor (°C) Heat exchanger gas pipe thermistor (°C) Indoor unit address No. Outdoor unit address No. BS unit address No. Zone control address No. Cooling/Heating batch address No. Demand/low-noise address No. Displays human presence detection rate (%) (see ∗7) in Area 1 (see ∗6). Display value × 10%. Displays "15" for units with no sensing type mounted. Displays human presence detection rate (%) (see ∗7) in Area 2 (see ∗6). Display value × 10%. Displays "15" for units with no sensing type mounted. Displays human presence detection rate (%) (see ∗7) in Area 3 (see ∗6). Display value × 10%. Displays "15" for units with no sensing type mounted. Displays human presence detection rate (%) (see ∗7) in Area 4 (see ∗6). Display value × 10%. Displays "15" for units with no sensing type mounted. Infrared sensor (°C) (See ∗8). Displays "–" for units with no sensing type mounted.
	○ Data	The corresponding data will be displayed, based on the Unit No. and Code selected.

∗1: Displays suction air temperature after correction for all models.
∗2: Displays temperature only for applicable models.
∗3: Displays floor temperature used for control (including correction) when the round flow with sensing is connected.
∗4: Displays control temperature (temperature near the person when the round flow with sensing is connected).
∗5: Displays temperature near the person only when the round flow with sensing is connected (SkyAir).
Displays suction air temperature after correction when the round flow with sensing is connected (*VRV*).
∗6: Areas mean four areas shown on the below.
∗7: For human presence detection rate (%), human motion is recognized by digital output ranging from 0 to 5V. (5V is output when no human presence is detected, and 0V is output when human presence is detected.)

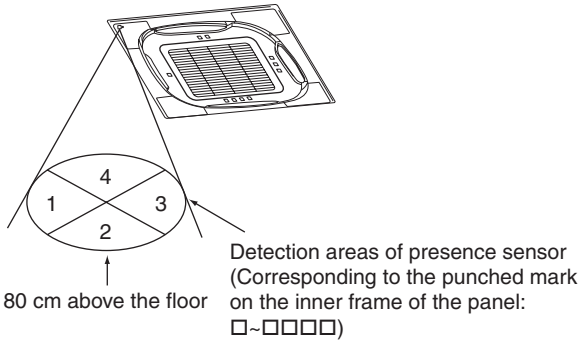

[Reference]
(1) 0% detection rate: Human presence is not detected at all.
(2) 25% detection rate: Human presence is detected, but the sensor does not recognize human presence.
(3) 50% detection rate: The sensor recognizes human presence (small human motion).
(4) 75% detection rate: The sensor recognized human presence (large human motion).
(5) 100% detection rate: The sensor constantly outputs 0V. Continuing this condition will display an error.

∗8: Directly displays a measured value sent from the adaptor PCB.

Part 4
Function and Control

1. Functions.....57
1.1 Stop Control 58
1.2 Standby Control.....58
1.3 Startup Control 59
1.4 Normal Operation 60
1.5 Protection Control.....64
1.6 Special Control 67

1. Functions

Operation flow chart

For detailed description of each function in the flow below, refer to the details on related function on the following pages.

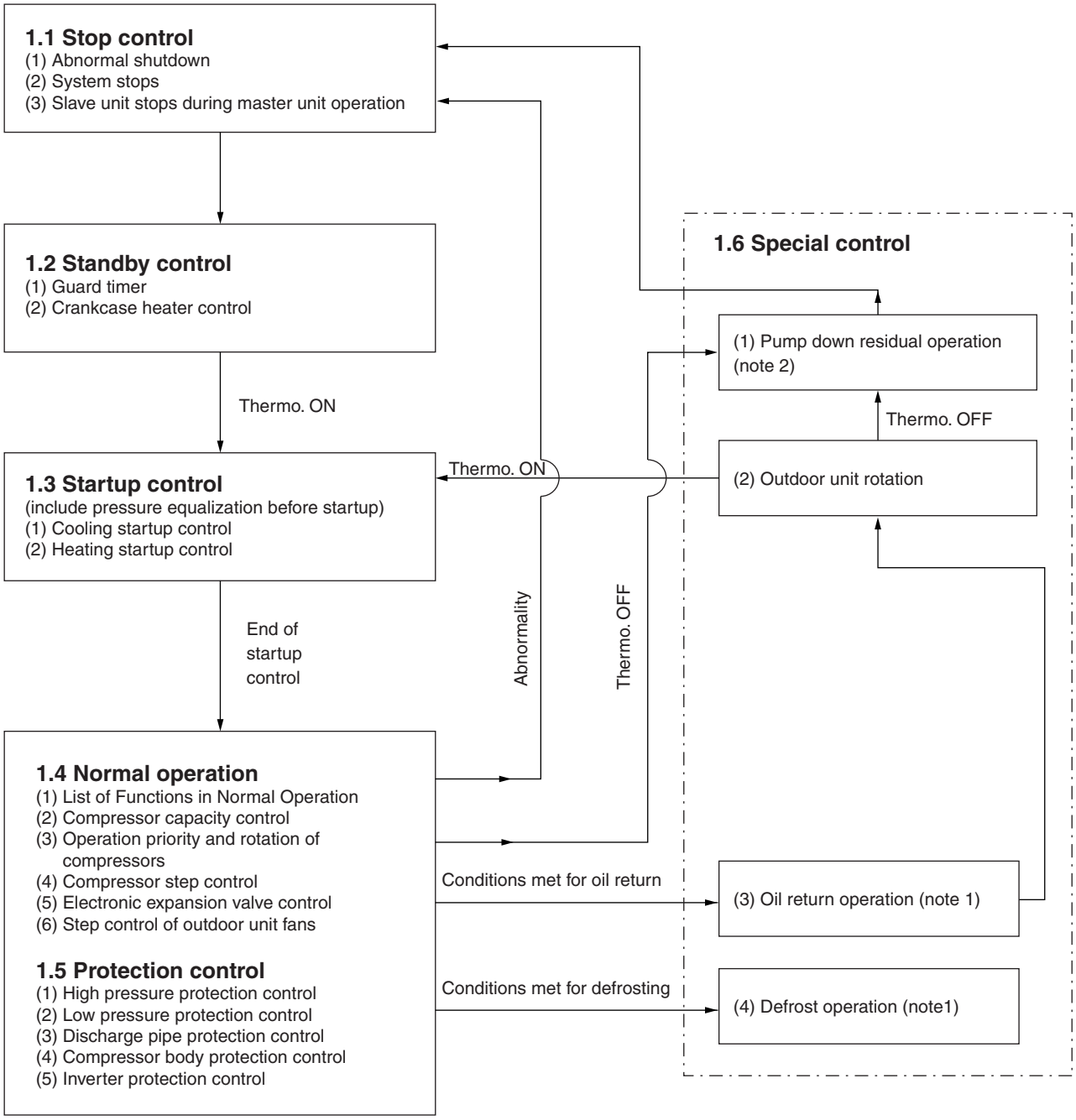

Note:
1. In the event indoor unit stops or the thermostat turns OFF while in oil return operation or defrosting operation, pump down residual operation is performed on completion of the oil return operation or defrosting operation.
2. Not performed during cooling mode.

1.1 Stop Control

1.1.1 Stop due to Error

In order to protect compressors, if any of the abnormal state occurs, the system will make "stop with thermostat OFF" and the error will be determined according to the number of retry times.
(Refer to "Error code and description" (P.145~) of the troubleshooting for the items to determine the error.)

1.1.2 When System is in Stop Mode

The four way valves both for heat exchanger switch and piping switch retain the condition before they were stopped.

1.1.3 Slave Unit Stops during Master Unit Operation

When slave unit is stopped (because of low demand), conditions for this unit are set same as above “1.1.2. When System is in Stop Mode” till this unit is required to operate (increase of load).

1.2 Standby Control

1.2.1 Restart Standby

Used to forcedly stop the compressor for a period of 5 minutes, in order to prevent the frequent ON/OFF of the compressor and equalize the pressure within the refrigerant system.
In addition, the outdoor unit fan carry out the residual operation for a while to suppress the acceleration of the pressure equalizing and melting of the refrigerant to the evaporator.

1.2.2 Crankcase Heater Control

In order to prevent the refrigerant from melting in the compressor oil in the stopped mode, this mode is used to control the crankcase heater.

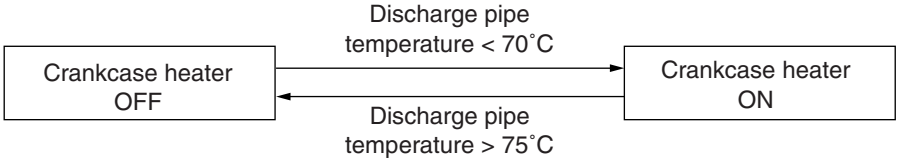

1.3 Startup Control

This control is used to equalize the pressure in the front and back of the compressor prior to the startup of the compressor, thus reducing startup loads. Furthermore, the inverter is turned ON to charge the capacitor.
To avoid stresses to the compressor due to oil return or else after the startup, the following control is made and the position of the four way valve is also determined. Start both the master and the slave units simultaneously to position the four way valve.

1.3.1 Startup Control in Cooling

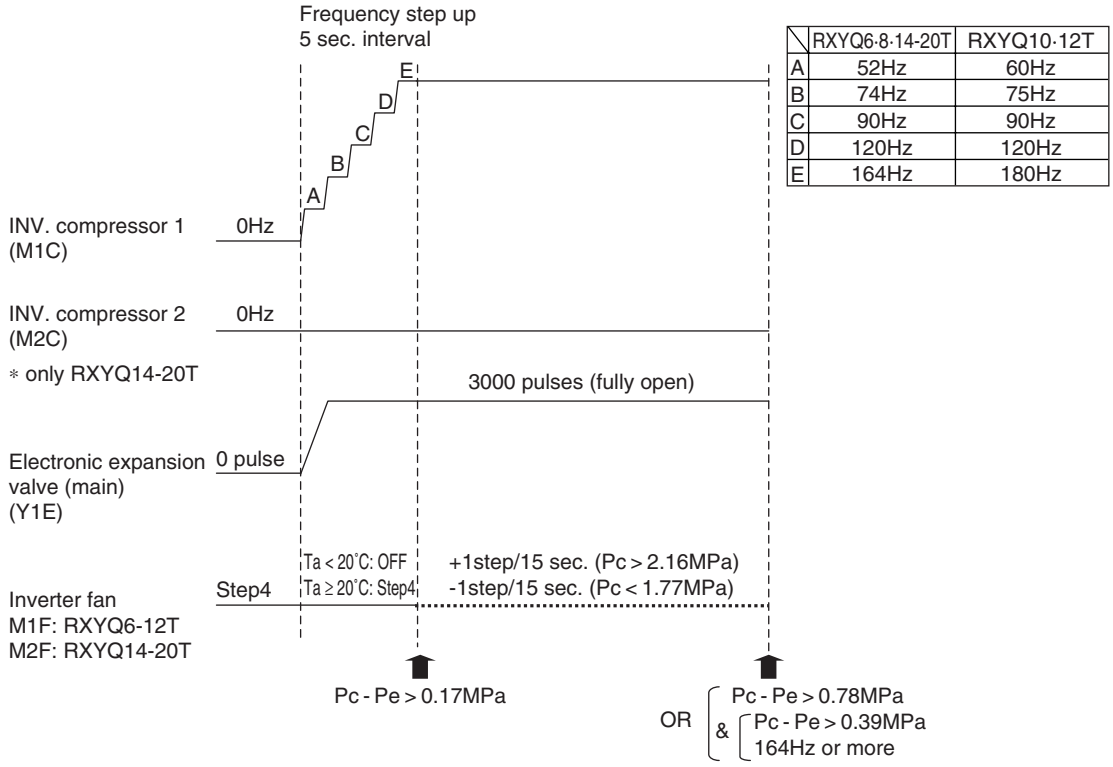

	RXYQ6·8·14-20T	RXYQ10·12T
A	52Hz	60Hz
B	74Hz	75Hz
C	90Hz	90Hz
D	120Hz	120Hz
E	164Hz	180Hz

1.3.2 Startup Control in Heating

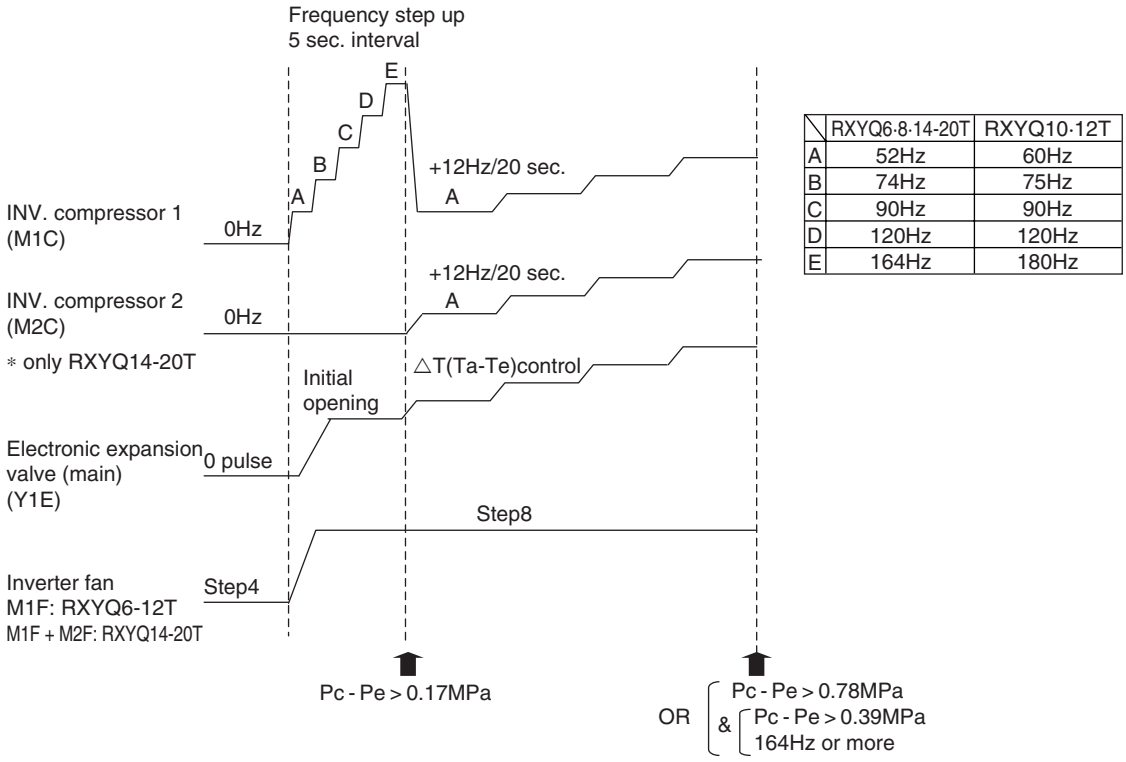

	RXYQ6·8·14-20T	RXYQ10·12T
A	52Hz	60Hz
B	74Hz	75Hz
C	90Hz	90Hz
D	120Hz	120Hz
E	164Hz	180Hz

1.4 Normal Operation

1.4.1 List of Functions in Normal Operation

[Cooling]

Part Name	Electric Symbol	RXYQ6-12T	RXYQ14-20T	Function of Functional Part
INV. compressor 1	M1C	●	●	PI control by Te target depends on field setting 2-8 and 2-81.
INV. compressor 2	M2C	–	●	
INV. fan 1	M1F	●	●	Fan speed 9 steps to keep minimum Tc target 41°C.
INV. fan 2	M2F	–	●	
Electronic expansion valve (Main)	Y1E	●	●	0 pulse = closed (thermo. OFF), 3000 pulses = open (thermo. ON).
Electronic expansion valve (Injection)	Y2E	●	●	0-480 pulses at compressor ON
Four way valve	Y1S	●	●	OFF
Solenoid valve (Accumulator oil return)	Y2S	●	●	Close if DSH < 15K
Solenoid valve (Oil return 1)	Y3S	●	●	Only close if HP - LP < 0.3 MPa (when compressor OFF)
Solenoid valve (Oil return 2)	Y4S	–	●	

[Heating]

Part Name	Electric Symbol	RXYQ6-12T	RXYQ14-20T	Function of Functional Part
INV. compressor 1	M1C	●	●	PI control by Tc target depends on field setting 2-9 and 2-82.
INV. compressor 2	M2C	–	●	
INV. fan 1	M1F	●	●	Fan step 7 (normal Tc & Te) or Fan step 8 (high load).
INV. fan 2	M2F	–	●	
Electronic expansion valve (Main)	Y1E	●	●	0 pulse = closed (thermo. OFF), 0-3000 pulses = SH control 5K.
Electronic expansion valve (Injection)	Y2E	●	●	0-480 pulses at compressor ON: based on indoor demand.
Four way valve	Y1S	●	●	ON
Solenoid valve (Accumulator oil return)	Y2S	●	●	Close if DSH < 15K.
Solenoid valve (Oil return 1)	Y3S	●	●	Only close if HP - LP < 0.3 MPa (when compressor OFF)
Solenoid valve (Oil return 2)	Y4S	–	●	

1.4.2 Compressor Capacity Control

Capacity steps

The compressor rotation speed is changed according to the control pressure.

- Cooling: suction pressure sensor value is converted into evaporating saturated temperature (relation between pressure and evaporating temperature based on characteristics of refrigerant R410A). For detailed explanation refer to chapter field settings ("Description field settings (mode 2 = m2) on outdoor unit control PCB" on P.118 and installation manual outdoor chapter "15.3. Energy saving and optimum operation").
  - Initial selection is made between "Automatic", "Fixed" or "High sensible".
  - During operation, the outdoor target evaporating temperature can be changed based on the selected sub function, taking indoor load into account.
- Heating: discharge pressure sensor value is converted into condensing saturation temperature.
  - Initial selection is made between "Automatic", "Fixed" or "High sensible".
  - During operation, the outdoor target condensing temperature can be changed based on the selected sub function, taking indoor load into account.
- The initial target saturated temperature can be changed. For details refer to "Description field settings (mode 2 = m2) on outdoor unit control PCB" on P.118: for Cooling: "Te set" based on field setting 2-8, for heating: "Tc set" based on field setting 2-9.
- During operation, outdoor control will take into account the pressure drop so that at indoor units, the pre-set target temperature is reached (average). The estimated pressure drop is calculated based on:
  - Pressure drop characteristics found during test-operation outdoor (step 7). At several evaporating temperature, outdoor control stores difference between outdoor evaporating temperature and average of indoor heat exchanger (= indoor evaporating temperature).
  - To have judgement of gas speed in main suction pipe, control takes the capacity step of the outdoor unit into account. In function of pressure drop characteristics at the different compressor capacity steps, control concludes the category of system pipe lay out (long, medium, short).
- Target Te outdoor (cooling) = "Te set" – estimated pressure drop – A.
- Target Tc outdoor (heating) = "Tc set" + estimated pressure drop + A.
- Correction factor "A" depends on difference indoor | Air inlet °C – set point °C | after startup period.

1.4.3 Operating Priority and Rotation of Compressors

Each compressor operates in the following order of priority.
In the case of multi-outdoor-unit system, each compressor operates in any of Pattern 1 through Pattern 3 according to the rotation of outdoor units.

INV.: Inverter compressor
INV. 1: Inverter compressor 1
INV. 2: Inverter compressor 2

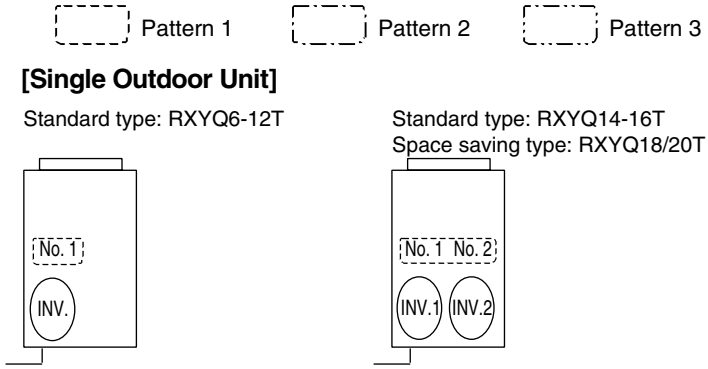

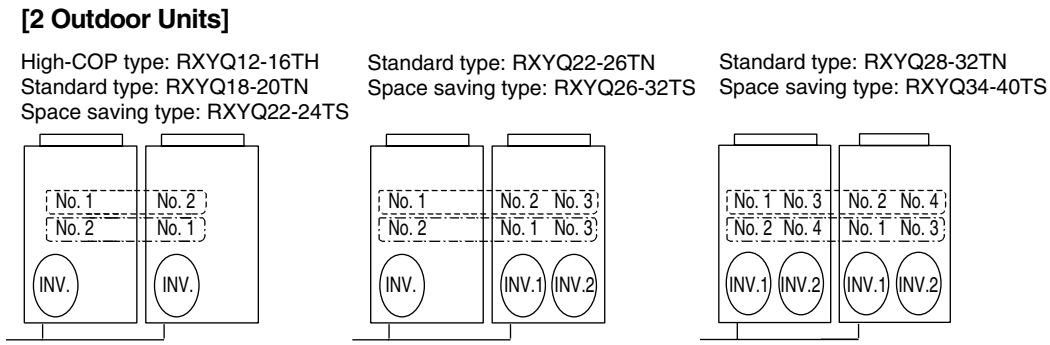

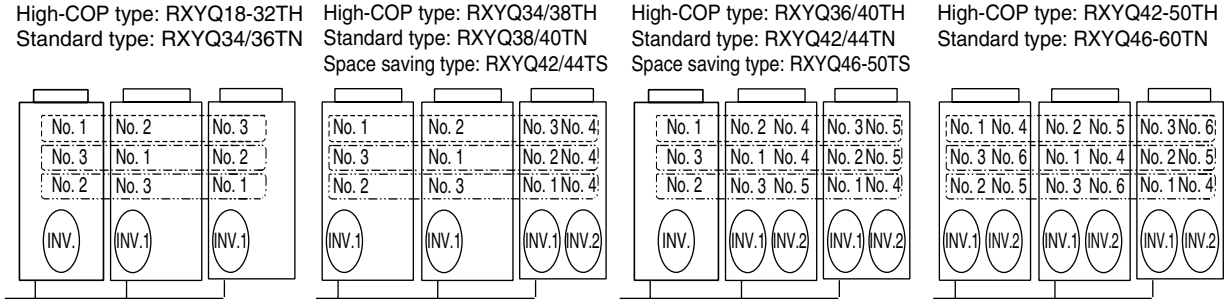

Note:
1. In the case of combination of 3 outdoor units, the above diagram shows master unit, slave unit 1, and slave unit 2 from left to right.
2. Compressors may operate in any pattern other than those mentioned above according to the operating status.

1.4.4 Compressor Step Control

- The actual rotation speed per second of the compressor (rps) depends on the type of compressor:
  - Compressor (RXYQ6-12T) and compressor 1 (RXYQ14-20T): rps = frequency / 2.
  - Compressor (RXYQ10, 12T) and compressor 2 (RXYQ18, 20T): rps = frequency / 3.
- The change of compressor capacity step corresponds to 1 rps / step.
- The control can skip an number of steps to reach faster the target saturated temperature.

1.4.5 Electronic Expansion Valve Control

Electronic expansion valve "Y1E"

- Cooling: electronic expansion valve is used only at fully closed or fully open condition:
  - Compressor(s) OFF: fully closed (0 pulse).
  - Compressor ON:
    - Fully open (3000 pulses): if level difference outdoor above indoor units within 50 m (field setting 2-49-0).
    - Limited open: if level difference outdoor maximum 90 m above indoor units (field setting 2-49-1).

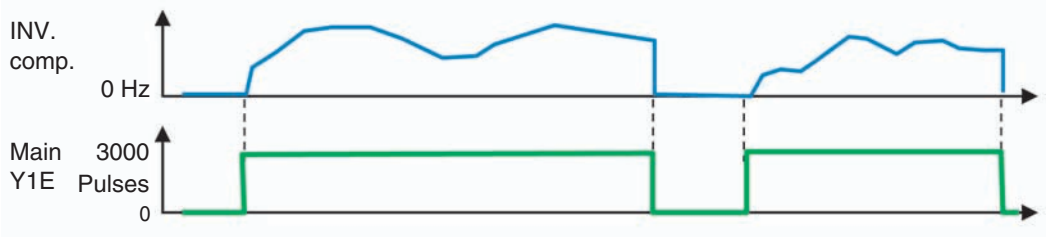

- Heating: electronic expansion valve is used in PID control suction superheat:
  - Compressor(s) OFF: fully closed (0 pulse).
  - Compressor ON:
    - At startup: closed = check suction pressure drops.
    - Modulated opening by:
      - Suction superheat = accumulator inlet °C – evaporating temperature.
      - Discharge superheat = discharge compressor °C – condensing temperature.
      - Preventive change when compressor capacity step changes.
      - Limited opening when condensing temperate exceeds target condensing.

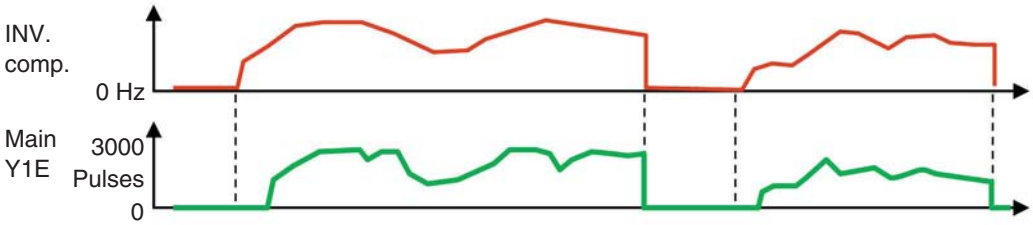

1.4.6 Step Control of Outdoor Unit Fans

Used to control the revolutions of outdoor unit fans in the steps listed in table below, according to condition changes.

STEP No.	Fan revolutions (rpm)											
	RXYQ6T	RXYQ8T	RXYQ10T	RXYQ12T	RXYQ14T		RXYQ16T		RXYQ18T		RXYQ20T	
					FAN1	FAN2	FAN1	FAN2	FAN1	FAN2	FAN1	FAN2
0	0	0	0	0	0	0	0	0	0	0	0	0
1	350	350	350	350	380	0	380	0	380	0	380	0
2	360	370	370	370	470	0	470	0	470	0	470	0
3	370	400	400	400	570	0	570	0	570	0	570	0
4	400	450	460	460	380	380	380	380	380	380	380	380
5	430	540	560	560	550	520	550	520	550	520	550	520
6	490	670	710	710	865	665	865	665	865	665	865	665
7Y	520	700	740	760	940	910	940	910	940	910	940	910
7X	550	720	760	796	Cooling: 1,055 Heating: 980 995	Cooling: 1,025 Heating: 950 965	Cooling: 1,055 Heating: 920 995	Cooling: 1,025 Heating: 950 965	Cooling: 1,055 Heating: 1,000	Cooling: 1,025 Heating: 970	1,136	1,106
8	565	740	775	Cooling: 835 Heating: 821	Cooling: 1,097 Heating: 995	Cooling: 1,067 Heating: 965	Cooling: 1,097 Heating: 1,015	Cooling: 1,067 Heating: 985	Cooling: 1,097 Heating: 1,055	Cooling: 1,067 Heating: 1,025	1,360	1,180

Note: 1. Figures listed above are all those controlled while in standard mode, which vary when the system is set to high static pressure or capacity priority mode.

1.5 Protection Control

1.5.1 High Pressure Protection Control

This high pressure protection control is used to prevent the activation of protection devices due to abnormal increase of high pressure and to protect compressors against the transient increase of high pressure.

[In cooling]

The following control is performed in the entire system.

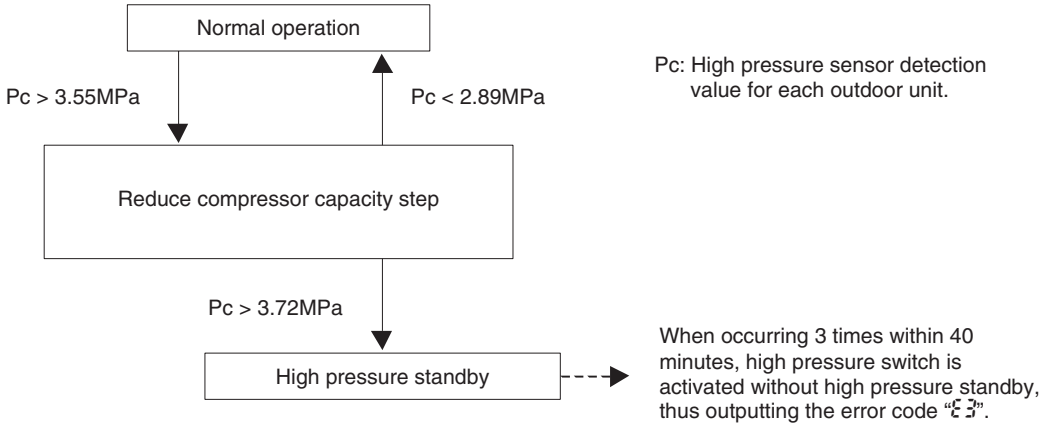

[In heating]

The following control is performed in the entire system.

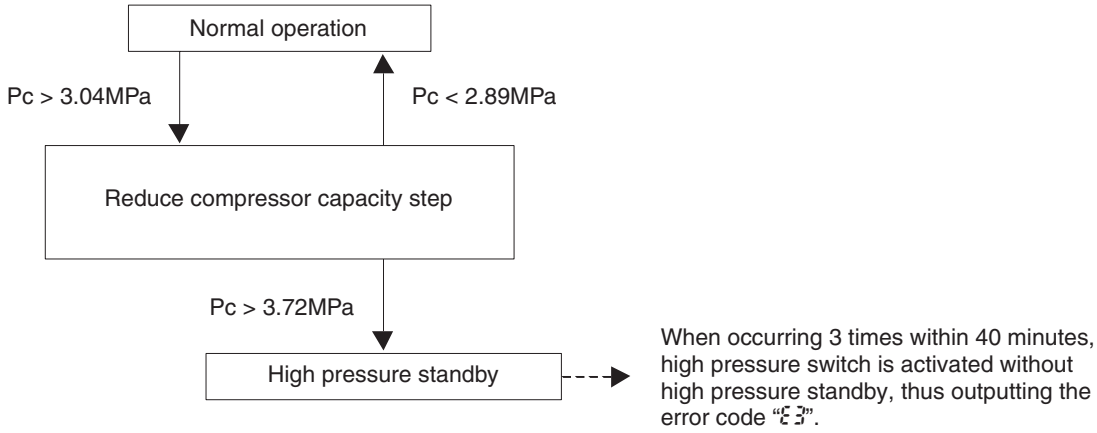

1.5.2 Low Pressure Protection Control

This low pressure protection control is used to protect compressors against the transient decrease of low pressure.

[In cooling]

Because of common low pressure, the following control is performed in the system.

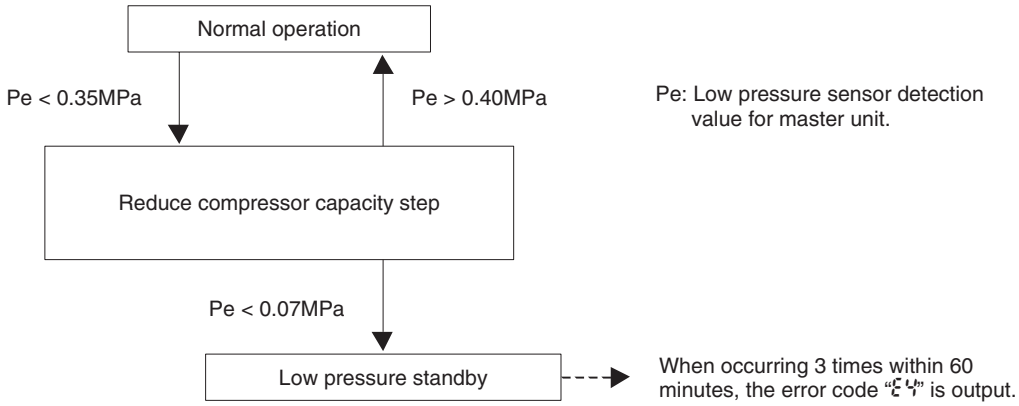

[In heating and simultaneous cooling/heating operation]
The following control is performed in the system.

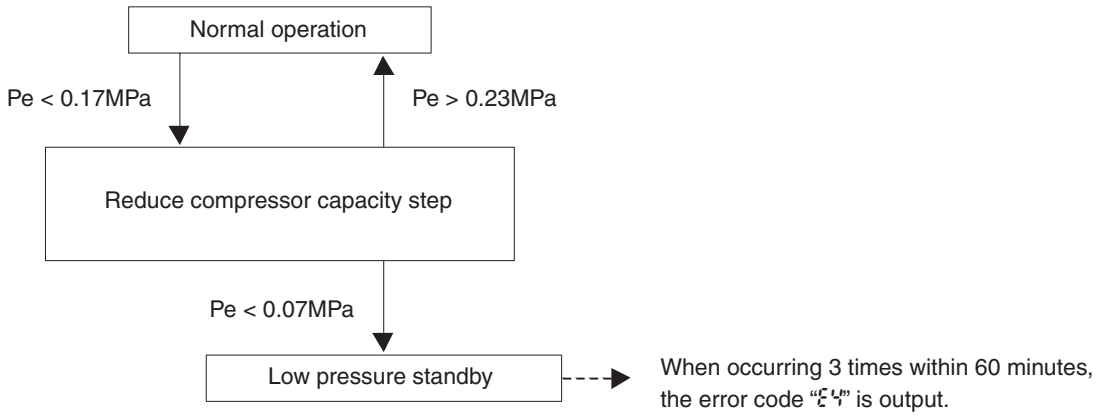

1.5.3 Discharge Pipe Protection Control

This discharge pipe protection control is used to protect the compressor internal temperature against an error or transient increase of discharge pipe temperature.

[Contents]
The following control is performed for each compressor of single unit as well as multi units.

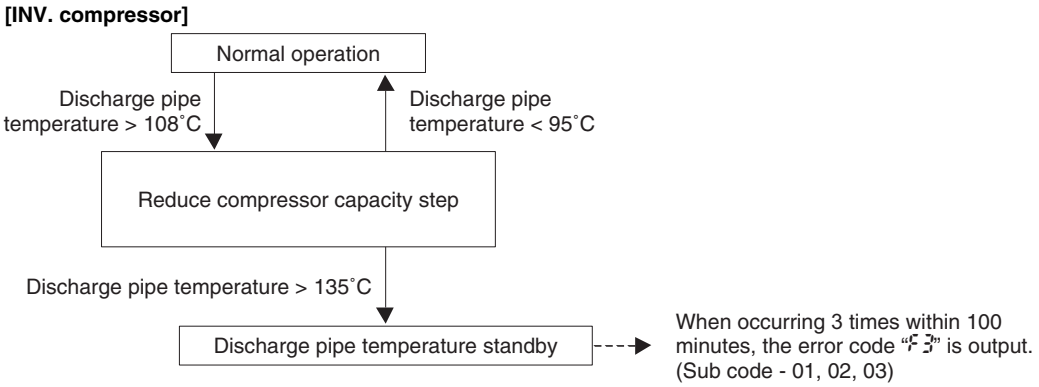

1.5.4 Compressor Body Protection Control

This compressor body protection control is used to protect the compressor internal temperature against an error or transient increase of compressor body temperature.

[Contents]
The following control is performed for each compressor of single unit as well as multi units.

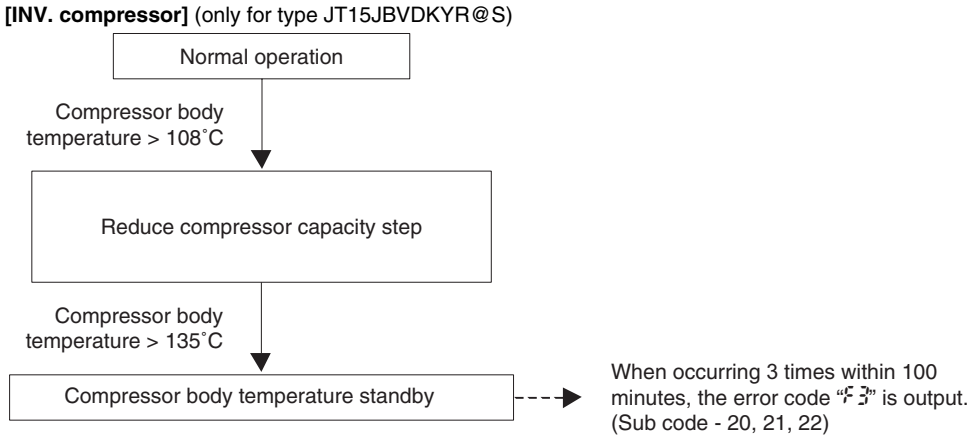

1.5.5 Inverter Protection Control

Inverter current protection control and radiation fin temperature control are performed to prevent tripping due to an error, or transient inverter overcurrent, and fin temperature increase.

In the case of multi-outdoor-unit system, each INV. compressor performs these controls in the following sequence.

[Inverter overcurrent protection control]

Perform the following control of integrated as well as multi units for each INV. compressor.

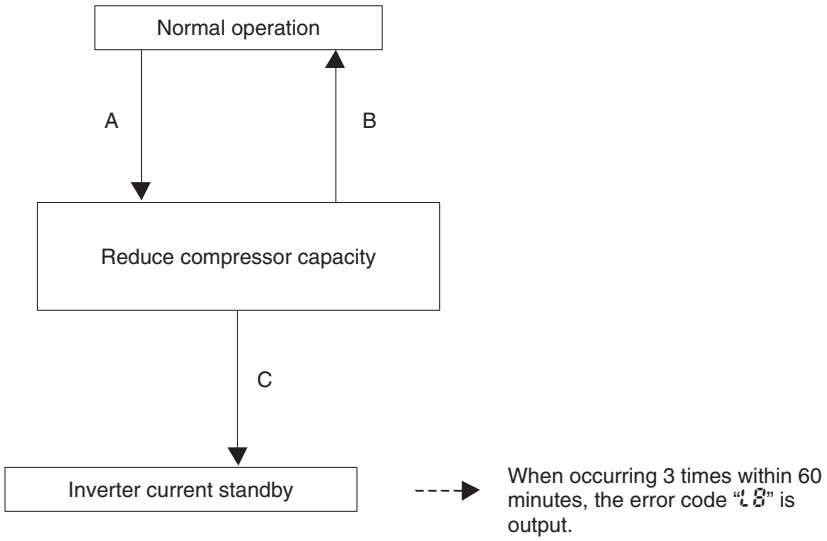

Model	RXYQ6/8T	RXYQ10/12T	RXYQ14-18T		RXYQ20T	
	M1C	M1C	M1C	M2C	M1C	M2C
A	> 14.7 A	> 18.5 A	> 14.7 A	> 14.7 A	> 14.7 A	> 22.0 A
B	< 14.7 A	< 18.5 A	< 14.7 A	< 14.7 A	< 14.7 A	< 22.0 A
C	> 16.1 A	> 22.5 A	> 16.1 A	> 16.1 A	> 16.1 A	> 22.5 A

[Radiation fin temperature control]

Perform the following control of integrated as well as multi units for each INV. compressor.

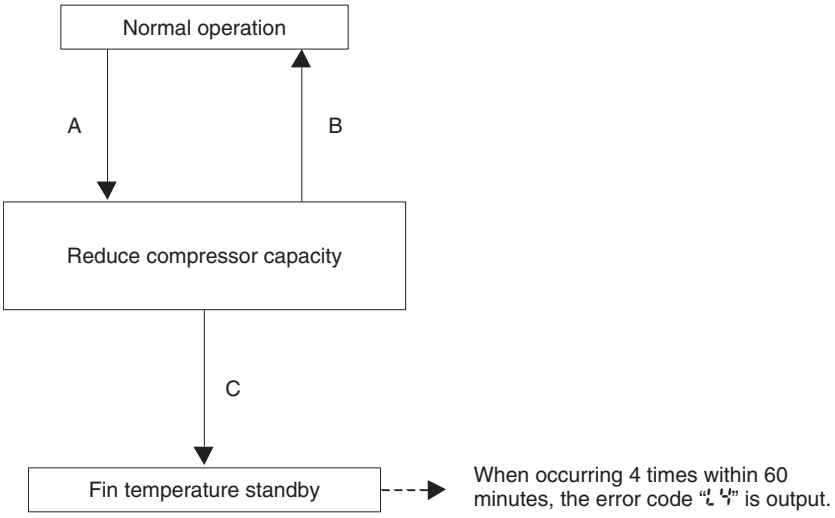

Model	RXYQ6/8T	RXYQ10/12T	RXYQ14-18T		RXYQ20T	
	M1C	M1C	M1C	M2C	M1C	M2C
A	> 101 °C	> 96 °C	> 99 °C	> 99 °C	> 99 °C	> 80 °C
B	< 98 °C	< 93 °C	< 96 °C	< 96 °C	< 96 °C	< 77 °C
C	> 105 °C	> 100 °C	> 105 °C	> 105 °C	> 105 °C	> 84 °C

1.5.6 Disable Heating Outdoor Ambient

- When outdoor ambient becomes high, outdoor unit can not perform heating because:
  - Low pressure sensor can give pressure value above upper limit of sensor: error “UC”.
  - Mechanical internal load on compressor increases.
  - Low compression ratio can result in insufficient compressor internal oil lubrication.
- Heating is disabled when outdoor air temperature raises above 27°C.
  - Forced thermostat-OFF indoor units.
  - Outdoor unit fan operates at “step 1”.
- Heating returns available when outdoor air temperature drops below 25°C.

1.6 Special Control

1.6.1 Pump Down Residual Operation

- To avoid refrigerant emigration when outdoor unit stops operation (thermostat or safety), all electronic expansion valves are closed.
- The solenoid valves Y3S and Y4S kept energized till pc-pe drops within 0.3 MPa.

1.6.2 Outdoor Unit Rotation

In the case of multi-outdoor-unit system, this outdoor unit rotation is used to prevent the compressor from burning out due to unbalanced oil level between outdoor units.

[Details of outdoor unit rotation]

In the case of multi-outdoor-unit system, each outdoor unit is given an operating priority for the control. Outdoor unit rotation makes it possible to change the operating priority of outdoor units.
Thus, the system becomes free of compressors that stop over an extended period of time at the time of partial loading, preventing unbalanced oil level.

[Timing of outdoor unit rotation]

OR
- After oil return operation
- After defrosting operation
- At the beginning of the startup control
- When any of outdoor unit stops for a period of 20 minutes or more (in heating).
- There are outdoor units that stop operation (in cooling).
- Low pressure of all outdoor units in operation is less than 0.25 MPa (in cooling).

Example) The following diagram shows outdoor unit rotation in combination of 3 outdoor units.

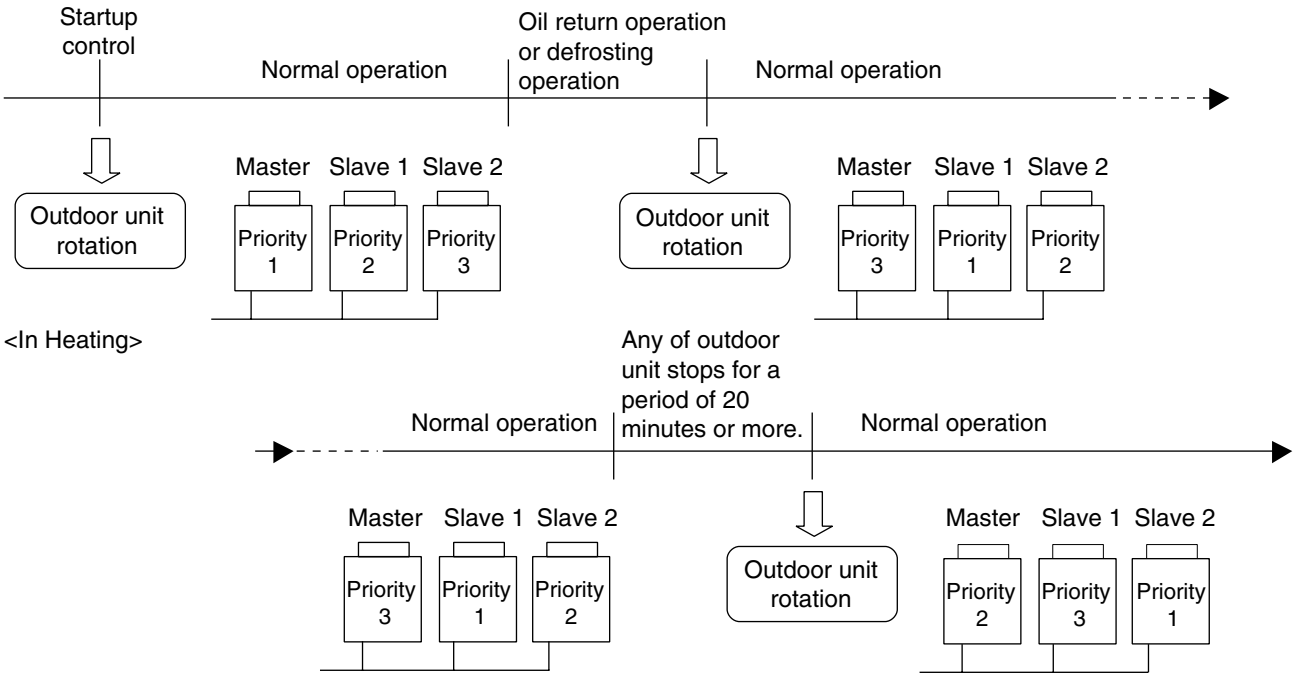

<In Cooling>

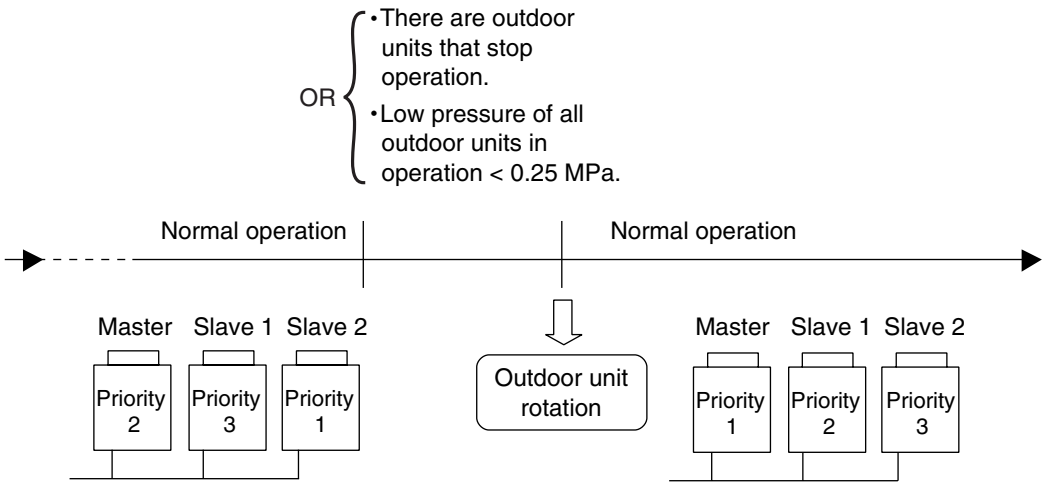

Note: 1. "Master unit", "slave unit 1" and "slave unit 2" in this section are the names for installation. They are determined in installation work, and not changed thereafter. (These names are different from "master unit" and "slave unit" for control.)
The outdoor unit connected the control wires (F1 and F2) for the indoor unit should be designated as master unit.
Consequently, The LED display on the main PCB for "master unit", "slave unit 1" and "slave unit 2" do not change.

1.6.3 Oil Return Operation

In order to prevent the compressor from running out of oil, the oil return operation is conducted to recover oil flown out from the compressor to the system side.

[In Cooling]

[Starting conditions]

Referring to the set conditions for the following items, start the oil return operation in cooling.

- Cumulative oil feed rate
- Timer setting (Make this setting so as to start the oil return operation when the initial cumulative operating time reaches 2 hours after power supply is turned ON and then every 8 hours.)

Furthermore, the cumulative oil feed rate is computed from Tc, Te, and compressor loads.

Part Name	Electric Symbol	RXYQ6-12T	RXYQ14-20T	Function of Functional Part
INV. compressor 1	M1C	●	●	Capacity step PI control
INV. compressor 2	M2C	—	●	
INV. fan 1	M1F	●	●	TC control
INV. fan 2	M2F	—	●	
Electronic expansion valve (Main)	Y1E	●	●	3000 pulses
Electronic expansion valve (Injection)	Y2E	●	●	0 pulse
Four way valve	Y1S	●	●	ON
Solenoid valve (Accumulator oil return)	Y2S	●	●	ON
Solenoid valve (Oil return 1)	Y3S	●	●	ON
Solenoid valve (Oil return 2)	Y4S	—	●	
Ending conditions				& · A lapse of 3 minutes. OR · Ts1-Te < 3˚C · A lapse of 6 minutes while the frequency is more than that of oil return operation.

Note: ∗ In the case of multi-outdoor-unit system,
Master unit: Performs the operations listed in the table on previous page.
Slave units: Operating units perform the operations listed in the table on previous page.
Non-operating units perform the operations listed in the table on previous page from the oil return operation.
(Non-operating unit stops during “oil return preparation operation”.)

Indoor unit actuator		Cooling oil return operation
Fan	Thermostat ON unit	Remote controller setting
	Stopping unit	OFF
	Thermostat OFF unit	Remote controller setting
Electronic expansion valve	Thermostat ON unit	Normal control
	Stopping unit	224 pulses
	Thermostat OFF unit	Normal control with forced thermostat ON

[In Heating]

Part Name	Electric Symbol	RXYQ6-12T	RXYQ14-20T	Function of Functional Part
INV. compressor 1	M1C	●	●	RXYQ6T: 266Hz RXYQ8T: 266Hz (Multi): 232Hz RXYQ10 · 12T: 282Hz RXYQ14-20T: 252Hz + 252Hz
INV. compressor 2	M2C	—	●	
INV. fan 1	M1F	●	●	With high pressure OFF ←→ Step 4 ←→ Step 6
INV. fan 2	M2F	—	●	
Electronic expansion valve (Main)	Y1E	●	●	RXYQ6-20T: 3000 pulses
Electronic expansion valve (Injection)	Y2E	●	●	0 pulse
Four way valve	Y1S	●	●	OFF
Solenoid valve (Accumulator oil return)	Y2S	●	●	ON
Solenoid valve (Oil return 1)	Y3S	●	●	ON
Solenoid valve (Oil return 2)	Y4S	—	●	
Ending conditions				OR (• A lapse of 6 min. • Ts1 - Te < 3°C)

Note: ∗ In the case of multi-outdoor-unit system,
Master unit: Performs the operations listed in the table above.
Slave units: Operating units perform the operations listed in the table above.
Non-operating units perform the operations listed in the table above from the oil return operation.
(Non-operating unit stops during “oil return preparation operation”.)

Indoor unit actuator		Heating oil return operation
Fan	Thermostat ON unit	OFF
	Stopping unit	OFF
	Thermostat OFF unit	OFF
Electronic expansion valve	Thermostat ON unit	Oil return EV opening degree
	Stopping unit	Oil return EV opening degree
	Thermostat OFF unit	Oil return EV opening degree

1.6.4 Defrosting Operation

To defrost the outdoor unit heat exchanger while in evaporator, the defrost operation is conducted to recover the heating capacity.

[Starting conditions]

Referring to the set conditions for the following items, start the defrosting operation.

- Heat transfer coefficient of the outdoor unit heat exchanger
- Heat exchange temperature (Tb)
- Timer (Set to 2 hours at minimum.)

Furthermore, the heat transfer coefficient of the outdoor unit Evaporator is computed from Tc, Te, and compressor loads.

Part Name	Electric Symbol	RXYQ6-12T	RXYQ14-20T	Operation
INV. compressor 1	M1C	●	●	RXYQ6T: 266Hz RXYQ8T: 266Hz (Multi): 232Hz RXYQ10 · 12T: 282Hz RXYQ14-20T: 252Hz + 252Hz
INV. compressor 2	M2C	—	●	
INV. fan 1	M1F	●	●	With high pressure OFF ←→ Step 4 ←→ Step 6
INV. fan 2	M2F	—	●	
Electronic expansion valve (Main)	Y1E	●	●	RXYQ6-20T: 3000 pulses
Electronic expansion valve (Injection)	Y2E	●	●	0 pulse
Four way valve	Y1S	●	●	OFF
Solenoid valve (Accumulator oil return)	Y2S	●	●	ON
Solenoid valve (Oil return 1)	Y3S	●	●	ON
Solenoid valve (Oil return 2)	Y4S	—	●	
Ending conditions				OR (• A lapse of 15 min. • Tb > 11°C continues for 30 sec. or more

Indoor unit actuator		During defrost
Fan	Thermostat ON unit	OFF
	Stopping unit	OFF
	Thermostat OFF unit	OFF
Electronic expansion valve	Thermostat ON unit	Defrost EV opening degree
	Stopping unit	Defrost EV opening degree
	Thermostat OFF unit	Defrost EV opening degree

1.6.5 Drain Pan Heater (Option)

When the drain pan heater is connected, it operates below.

[Operating conditions]

& (• Outdoor air temperature < 3 °C
• During defrost operation

Part 5
Field Settings

1. Test Operation 72
   1.1 Test Operation Checks.....72
2. Field Setting from Remote Controller.....73
   2.1 Wired Remote Controller.....73
   2.2 Wireless Remote Controller 75
   2.3 Simplified Remote Controller.....76
   2.4 Setting Contents and Code No. for Indoor Units 77
3. List of Field Setting Items.....90
   3.1 Function Setting 90
   3.2 Service Setting 92
   3.3 Settings by DIP Switches 93
   3.4 DIP Switch Setting Mounting a Spare PCB.....93
4. Settings by BS Buttons 95
   4.1 Normal Mode.....96
   4.2 Setting Mode (= Mode 2).....98
   4.3 Monitor Mode 103
5. Procedure and Outline 127
   5.1 Check Work Prior to Turn Power Supply ON 127
   5.2 Turn Power ON 128
   5.3 Charging Refrigerant.....129

1. Test Operation

1.1 Test Operation Checks

1.1.1 Checks before Test Operation

Before carrying out a test operation, proceed as follows:

Step	Action
1	Make sure the voltage at the primary side of the safety breaker is: (380 ~ 415)V ± 10% for 3-phase units
2	Fully open the liquid and the gas stop valve.

1.1.2 Test Operation Checks

To carry out a test operation, check the following:

- Check that the temperature setting of the remote controller is at the lowest level in cooling mode or use test mode.
- Go through the following checklist:

Checkpoints	Cautions or warnings
Are all units securely installed?	● Dangerous for turning over during storm ● Possible damage to pipe connections
Is the earth wire installed according to the applicable local standard?	Dangerous if electric leakage occurs
Are all air inlets and outlets of the indoor and outdoor units unobstructed?	● Poor cooling ● Poor heating
Does the drain flow out smoothly?	Water leakage
Is piping adequately heat-insulated?	Water leakage
Have the connections been checked for gas leakage?	● Poor cooling ● Poor heating ● Stop
Is the supply voltage conform to the specifications on the name plate?	Incorrect operation
Are the cable sizes as specified and according to local regulations?	Damage of cables
Are the remote controller signals received by the unit?	No operation

2. Field Setting from Remote Controller

Individual function of indoor unit can be changed from the remote controller. At the time of installation or after service inspection / repair, make the field setting in accordance with the following description.
Wrong setting may cause error.
(When optional accessory is mounted on the indoor unit, setting for the indoor unit may be required to change. Refer to information in the option handbook.)

2.1 Wired Remote Controller

2.1.1 BRC1C62

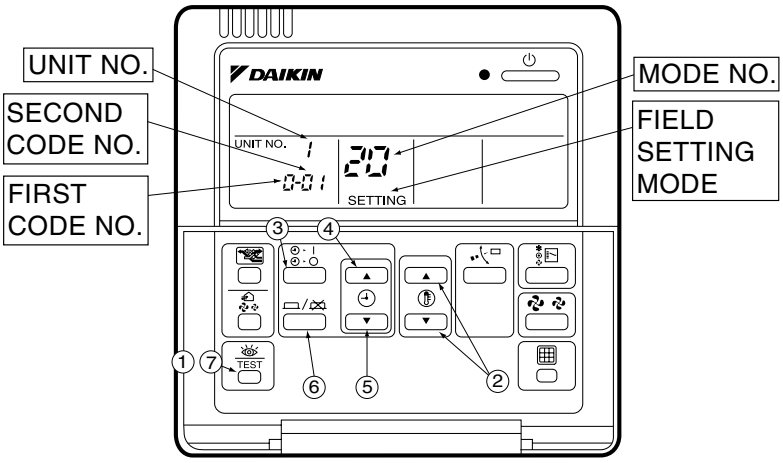

1. When in the normal mode, press the " " button for 4 seconds or more, and the FIELD SETTING MODE is entered.
2. Select the desired MODE NO. with the " " button (②).
3. During group control, when setting by each indoor unit (mode No. 20, 22 and 23 have been selected), press the " " button (③) and select the INDOOR UNIT NO to be set. (This operation is unnecessary when setting by group.)
4. Press the " " upper button (④) and select FIRST CODE NO.
5. Press the " " lower button (⑤) and select the SECOND CODE NO.
6. Press the " " button (⑥) once and the present settings are SET.
7. Press the " " button (⑦) to return to the NORMAL MODE.

(Example)
If during group setting and the time to clean air filter is set to FILTER CONTAMINATION, HEAVY, SET MODE NO. to "10" FIRST CODE NO. to "0", and SECOND CODE NO. to "02".

2.1.2 BRC1E62

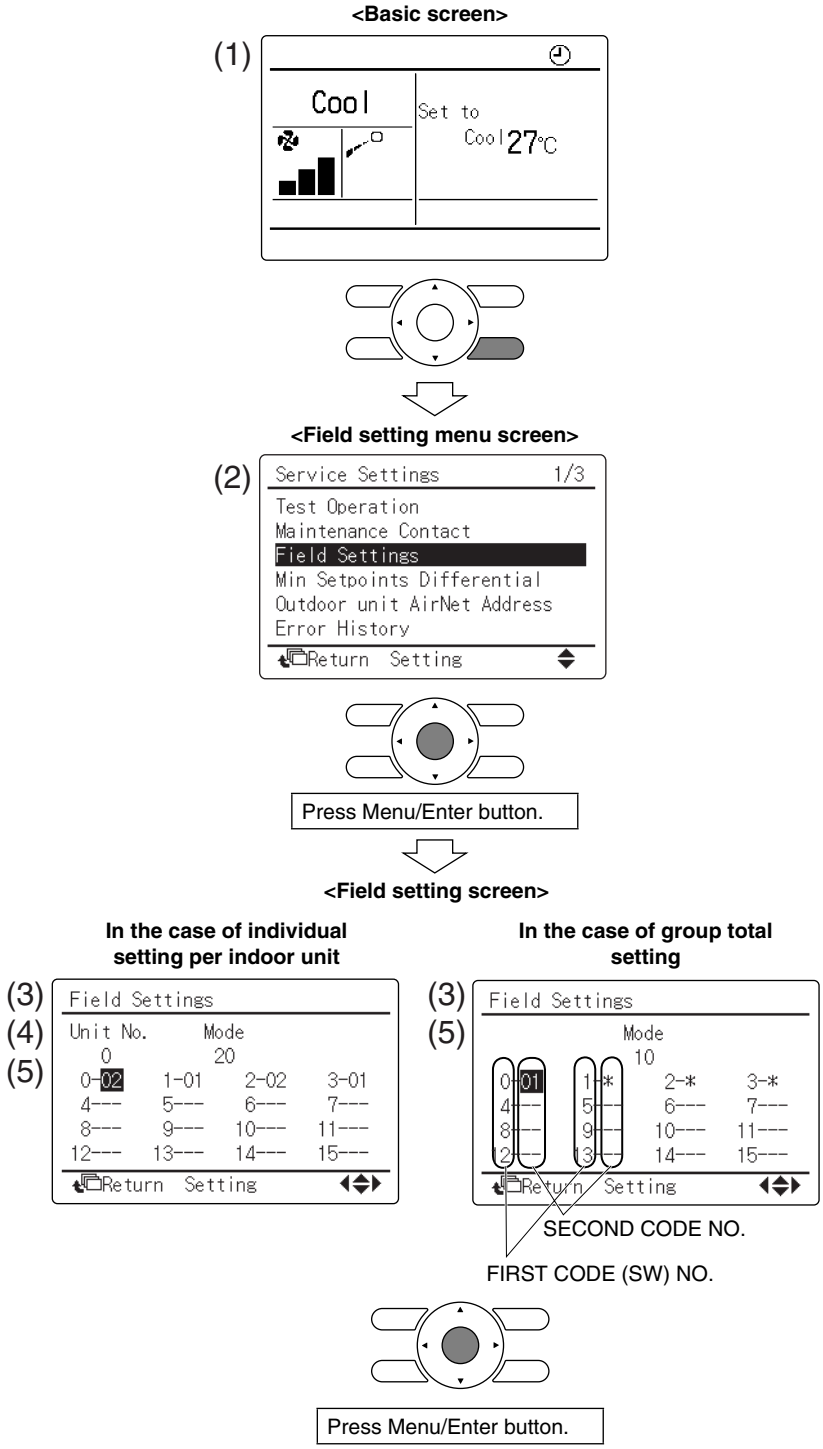

1 Press and hold Cancel button for 4 seconds or more.
Field setting menu is displayed.

2 Select Field setting in the field setting menu, and press Menu/Enter button.
Field setting list screen is displayed.

3 Highlight the mode, and select desired "Mode No." by using ▲▼ (Up/Down) button.

4 In the case of setting per indoor unit during group control (When Mode No. such as 20 , 21 , 22 , 23 , 25 are selected), highlight the unit No. and select "Indoor unit No." to be set by using ▲▼ (Up/Down) button. (In the case of group total setting, this operation is not needed.)

[In the case of individual setting per indoor unit, current settings are displayed. And, SECOND CODE NO. " - " means no function.]

5 Highlight SECOND CODE NO. of the FIRST CODE NO. to be changed, and select desired "SECOND CODE NO." by using ▲▼ (Up/Down) button.
Multiple identical mode number settings are available.

[In the case of group total setting, all of SECOND CODE NO. which may be set are displayed as " * ".
" * " is changed to SECOND CODE NO. to be set. And, SECOND CODE NO. " - " means no function.]

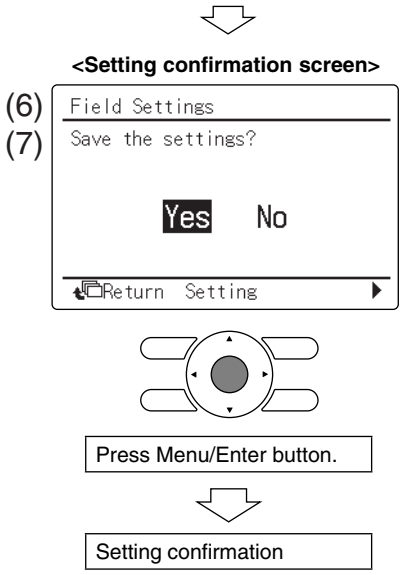

6 Press Menu/Enter button. Setting confirmation screen is displayed.

7 Select Yes and press Menu/Enter button. Setting details are determined and field setting list screen returns.

8 In the case of multiple setting changes, repeat “(3)” to “(7)”.

9 After all setting changes are completed, press Cancel button twice.

10 Backlight goes out, and “Connection under check Please wait for a moment” is displayed for initialization. After the initialization, the basic screen returns.

⚠CAUTION

- When an optional accessory is installed on the indoor unit, settings of the indoor unit may be changed. See the manual of the optional accessory.
- For field setting details of the outdoor unit, see installation manual attached to the outdoor unit.

2.2 Wireless Remote Controller

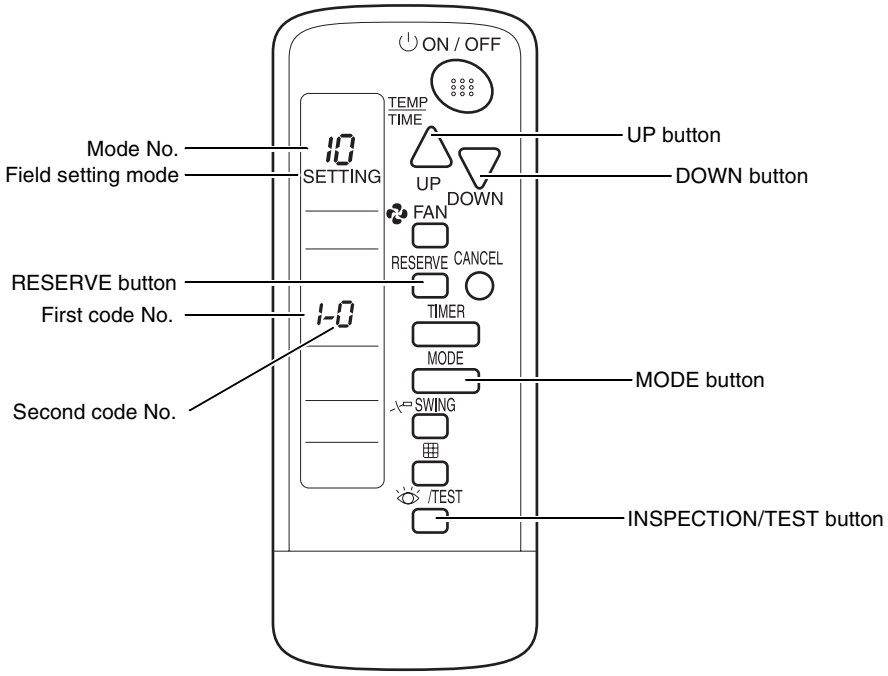

Setting

To set the field settings, you have to change:

- Mode No.
- First code No.
- Second code No.

To change the field settings, proceed as follows:

Step	Action
1	Hold down the INSPECTION/TEST button for at least 4 seconds during normal mode to enter the “Field setting mode”.
2	Press the MODE button to select the desired “Mode No.”.
3	Press the UP button to select the “First code No.”.
4	Press the DOWN button to select the “Second code No.”.
5	Press the RESERVE button to set the present settings.
6	Press the INSPECTION/TEST button to return to the “Normal mode”.

2.3 Simplified Remote Controller

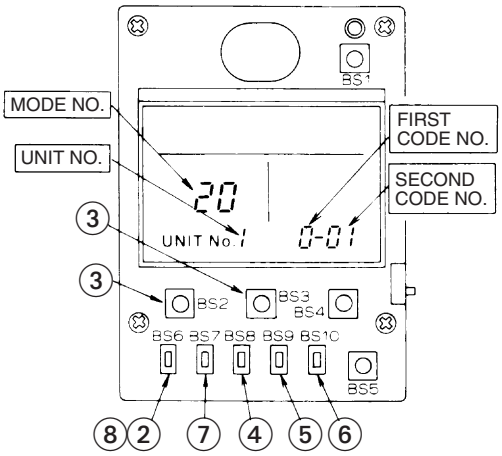

1. Remove the upper part of remote controller.
2. When in the normal mode, press the [BS6] BUTTON (②) (field setting), and the FIELD SETTING MODE is entered.
3. Select the desired MODE No. with the [BS2] BUTTON (③) (temperature setting ▲) and the [BS3] BUTTON (③) (temperature setting ▼).
4. During group control, when setting by each indoor unit (mode No. 20, 22, and 23 have been selected), press the [BS8] (④) BUTTON (unit No.) and select the INDOOR UNIT NO. to be set. (This operation is unnecessary when setting by group.)
5. Press the [BS9] BUTTON (⑤) (set A) and select FIRST CODE NO.
6. Press the [BS10] BUTTON (⑥) (set B) and select SECOND CODE NO.
7. Press the [BS7] BUTTON (⑦) (set/cancel) once and the present settings are SET.
8. Press the [BS6] BUTTON (⑧) (field setting) to return to the NORMAL MODE.
9. (Example) If during group setting and the time to clean air filter is set to FILTER CONTAMINATION - HEAVY, SET MODE NO. to “10”, FIRST CODE NO. to “0”, and SECOND CODE NO. to “02”.

2.4 Setting Contents and Code No. for Indoor Units

: Factory setting

Mode No. (∗2)	First code No.	Description of the Setting		Second Code No. 01		02		03		04		Details No.
10(20)	0	Filter contamination heavy/light (Setting for display time to clean air filter) (Sets display time to clean air filter to half when there is heavy filter contamination.)	Ultra long life filter	Light	Approx. 10,000 hrs.	Heavy	Approx. 5,000 hrs.	—		—		(1)
			Long life filter		Approx. 2,500 hrs.		Approx. 1,250 hrs.					
			Standard filter		Approx. 200 hrs.		Approx. 100 hrs.					
	1	Long life filter type		Long life filter		Ultra long life filter		—		—		(2)
	2	Room temperature thermistor in remote controller		Remote controller + Body thermostat		Only body thermostat		Only remote controller thermostat		—		(3)
	3	Display time to clean air filter calculation (Set when filter sign is not to be displayed.)		Display		No display		—		—		(4)
	6	Remote controller thermostat control during the group control		Remote controller thermostat control is not permitted		Remote controller thermostat control is permitted		—		—		(5)
	7	Time for absence area detection (∗5)		30 minutes		60 minutes		—		—		(6)
11(21)	3	Setting the airflow rate when heating		Standard		Slightly increased		Increased		—		(7)
	6	Setting the rate of human detection (∗5)		High sensitivity		Low sensitivity		Standard sensitivity		Infrared presence sensor disabled		(8)
	7	Airflow adjustment		OFF		Completion of airflow adjustment		Start of airflow adjustment		—		(9)
	8	Compensating the temperature around human (∗5)		Suction air temperature only		Priorities given on the suction air temperature		Standard		Priorities given on the floor temperature		(10)
	9	Compensating the floor temperature (∗5)		-4°C		-2°C		±0°C		+2°C		(11)
12(22)	0	Optional accessories output selection (field selection of output for adaptor for wiring)		Indoor unit turned ON by thermostat		—		Operation output		Error output		(12)
	1	External ON/OFF input (Set when ON/OFF is to be controlled from outside.)		Forced OFF		ON/OFF control		External protection device input		—		(13)
	2	Thermostat differential changeover (Set when remote sensor is to be used.)		1°C		0.5°C		—		—		(14)
	3	Airflow setting when heating thermostat is OFF		LL		Set fan speed		—		—		(15)
	4	Automatic mode differential		01:0	02:1	03:2	04:3	05:4	06:5	07:6	08:7	(16)
	5	Power failure automatic reset		Not equipped		Equipped		—		—		(17)
	6	Airflow setting when cooling thermostat is OFF		LL		Set fan speed		—		—		(18)
13(23)	0	Setting of normal airflow		N		H		S		—		(19)
	1	Selection of airflow direction (Set when a sealing material kit has been installed.)		F (4 directions)		T (3 directions)		W (2 directions)		—		(20)
	2	Swing pattern settings (In case of an infrared floor sensor is installed)		All direction synchronized swing		—		Facing swing		—		(21)
	3	Operation of downward flow flap: Yes/No		Equipped		Not equipped		—		—		(22)
	4	Setting airflow position setting		Draft prevention		Standard		Ceiling Soiling prevention		—		(23)
	5	Setting of static pressure selection		Standard		High static pressure		—		—		(24)
	6	External Static Pressure Settings		01:30	02:50	03:60	04:70	05:80	06:90	07:100	08:110	(25)
				09:120	10:130	11:140	12:150	13:160	14:180	15:200		

15(25)	1	Thermostat OFF excess humidity	Not equipped	Equipped	—	—		(26)
	2	Direct duct connection (when the indoor unit and Heat Reclaim Ventilator are connected by duct directly.) (∗4)	Not equipped	Equipped	—	—		(27)
	3	Drain pump and humidifier interlock selection	Not equipped	Equipped	—	—		(28)
	5	Selection for individual ventilation setting by remote controller	Not equipped	Equipped	—	—		(29)
1b (2b)	3	Display of Contact Center	Displayed	No displayed	—	—		(30)
	4	Display of error codes on the remote controller	—	Two-digit display	—	Four-digit display		(31)
	12	Key-lock pattern settings	No operation allowed (Cancel procedure is displayed.)	No operation allowed (Cancel procedure is not displayed.)	No menu operation is allowed (Cancel procedure is displayed.)	No menu operation is allowed any time.		(32)
	14	Setting "restricted / permitted" of airflow block	01	02	03	04	05	06	(33)
			Airflow block permitted	—	—	—	Airflow block restricted	—	
1c (2c)	0	Room temperature display	Room temperature is not displayed	Room temperature is displayed	—	—		(34)

Note:

1. Settings are made simultaneously for the entire group, however, if you select the mode No. inside parentheses, you can also set by each individual unit. Setting changes however cannot be checked except in the individual mode for those in parentheses.
2. Do not make settings other than those described above. Nothing is displayed for functions the indoor unit is not equipped with.
3. “88” may be displayed to indicate the remote controller is resetting when returning to the normal mode.

∗4. If the setting mode to “Equipped”, heat reclaim ventilation fan conducts the fan residual operation by linking to indoor unit.

∗5. Available for setting when option with the built-in human detection and floor temperature detection functions is mounted.

2.4.1 Detailed Explanation of Setting Modes

(1) Filter Sign Setting

If switching the filter sign ON time, set as given in the table below.

Mode No.	First Code No.	Second Code No.	Standard Filter	Long Life Filter	Ultra Long Life Filter	Setting
10 (20)	0	01	200 hrs.	2,500 hrs.	10,000 hrs.	Contamination Light
		02	100 hrs.	1,250 hrs.	5,000 hrs.	Contamination Heavy

(2) Filter Type

When a Ultra long life filter is installed, the filter sign timer setting must be changed.

Mode No.	First Code No.	Second Code No.	Setting
10 (20)	1	01	Long Life Filter
		02	Ultra Long Life Filter

((3) (5) (10) Selecting of Thermistor

Select a thermistor to control the room temperature.

■ When the unit is not equipped with an infrared floor sensor:

Mode number	First code No.	Second code No.	Thermistor that controls room temperature
10 (20)	2	01	Room temperature thermistor in remote controller and suction air thermistor for indoor unit
		02	Suction air thermistor for indoor unit
		03	Room temperature thermistor in remote controller

The factory setting for the Second code No. is "01" and room temperature is controlled by the suction air thermistor for indoor unit and room temperature thermistor in remote controller. When the Second code No. is set to "02", room temperature is controlled by the suction air thermistor. When the Second code No. is set to "03", room temperature is controlled by the room temperature thermistor in remote controller.

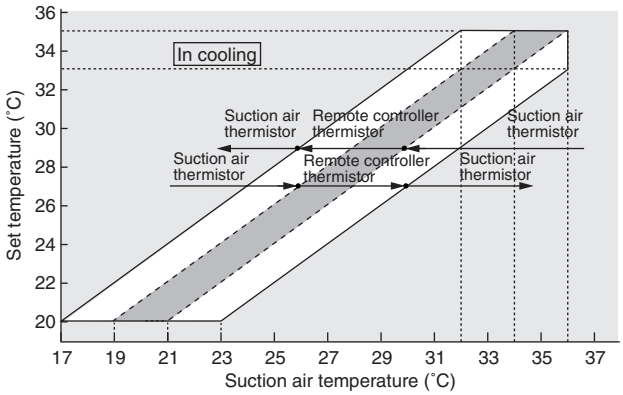

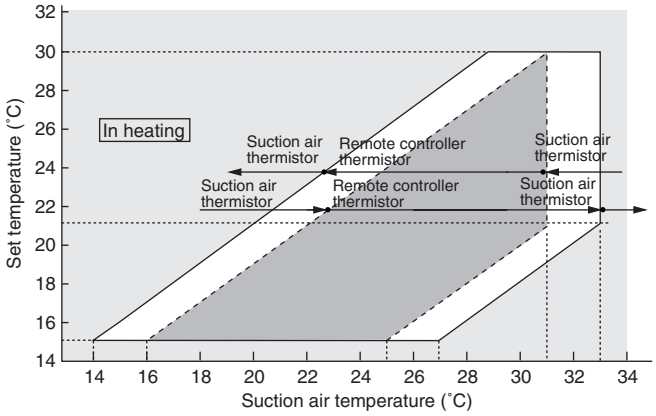

■ When the unit is equipped with an infrared floor sensor:

Mode No.	First Code No.	Second Code No.					
10 (20)	2	01	02	02	02	02	03
11 (21)	8	01	01	02	03	04	01
The thermistor to be used		↓	↓	↓	↓	↓	↓
Remote controller thermistor		○	—	—	—	—	○
Suction air thermistor		○	○	○	○	○	—
Infrared floor sensor		—	—	○	○	○	—
		The infrared floor sensor is not used	Only the suction air thermistor is used	Priorities given on the suction air temperature (∗)	Standard setting (Factory setting)	Priorities given on the floor temperature (∗)	Only the remote controller thermistor is used

∗ Refer to "(10) Compensating the temperature around human."
Note that the control is automatically switched to the one performed only by the suction air thermistor for indoor unit when the Second code No. is "01" during the group control.
To use the remote controller thermistor during the group control, select the Second code No. "02" in First code No. "6."

Mode No.	First Code No.	second Code No.	Note
10 (20)	6	01	The remote controller thermostat control is not permitted during the group control
		02	The remote controller thermostat control is permitted during the group control

(4) "Filter Cleaning" Displayed or Not Displayed

Whether or not to display "Filter Cleaning" after operation of certain duration can be selected.

Mode No.	First Code No.	Second Code No.	"Filter Cleaning" Display
10 (20)	3	01	Display
		02	Not Display

∗ "Filter Cleaning" is not displayed when an Auto-clean Panel is connected.

(6) Time for Absence Area Detection
(For units with an Infrared Presence Sensor only)

By selecting the energy-saving operation mode in the absence, the target temperature is shifted to the energy-saving end by 1°C (maximum 2°C) after the state of absence continues for a certain period of time.
Absent time defined for detection can be selected as follows:

Mode No.	First Code No.	Second Code No.	Description (Time for absence detection)
10 (20)	7	01	30 minutes
		02	60 minutes

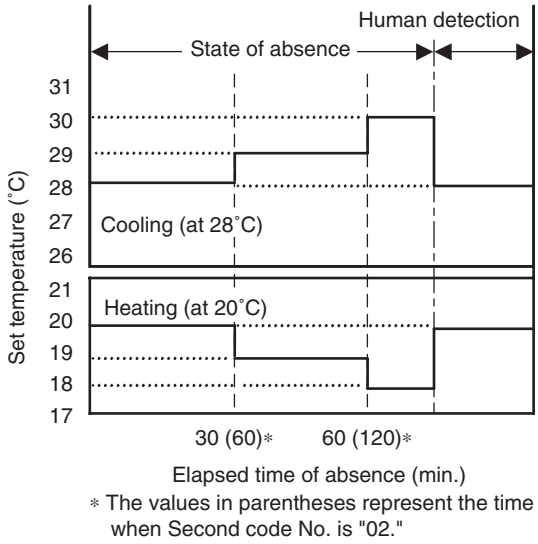

- The set temperature displayed on the remote controller remains same even if the target temperature is shifted.
- As soon as people is detected while the temperature is shifted, this control will be cancelled (reset).

(7) Setting the Airflow Rate When Heating

The fan revolution is changed to maintain the sufficient distance for warm air to reach during the heating operation. The setting should be changed depending on the installation condition of the unit.

Mode No.	First Code No.	Second Code No.		
		01	02	03
11 (21)	3	Standard	Slightly increased	Increased

Note that this setting is effective only during the heating operation.

(8) Setting the Rate of Human Detection
(For units with the infrared presence sensor only)

Set the sensitivity of the infrared presence sensor.

- The infrared presence sensor can be disabled by selecting the Second code No. "04."

(Note) When the infrared presence sensor is disabled, the remote controller menu does not display some functions such as the automatic draft reduction, energy-saving operation in absence and halt in absence.

Mode No.	First Code No.	Second Code No.	Contents
11(21)	6	01	High sensitivity
		02	Low sensitivity
		03	Standard sensitivity
		04	Infrared presence sensor disabled

(9) Airflow Adjustment (AUTO)

External Static Pressure Settings

Make settings in either method (a) or method (b) as explained below.

(a) Use the airflow auto adjustment function to make settings.
Airflow auto adjustment: The volume of blow-off air is automatically adjusted to the rated quantity.

(b) Select External Static Pressure with Remote Controller Check that 01 (OFF) is set for the “SECOND CODE No.” in “MODE No. 21” for airflow adjustment on an indoor unit basis in Table 4. The “SECOND CODE No.” is set to 01 (OFF) at factory setting. Change the “SECOND CODE No.” as shown in table according to the external static pressure of the duct to be connected.

Mode No.	First Code No.	Second Code No.	Airflow Adjustment
11 (21)	7	01	OFF
		02	Completion of airflow adjustment
		03	Start of airflow adjustment

(10) Compensating the Temperature around Human
(When the unit is equipped with an infrared floor sensor)

Change the ratio between the suction air temperature and floor temperature used to calculate the temperature around human.
The temperature around human is calculated using the values of the suction air thermistor and the infrared floor sensor. The factory setting is "Normal" (the average value of the suction air temperature and the floor temperature is applied). However, the rate at which the suction air thermistor and the infrared floor sensor affect the temperature around human can be changed with this setting.

- To reflect the effect of the temperature around the ceiling, select the "Priorities given on the suction air temperature" (the Second code No. "02").
- To reflect the effect of the temperature around the floor, select the "Priorities given on the floor temperature" (the Second code No. "04").
- The infrared floor sensor can be disabled by selecting "Suction air temperature only" (the Second code No. "01").

Mode No.	First Code No.	Second Code No.	Contents
11 (21)	8	01	Suction air temperature only
		02	Priorities given on the suction air temperature
		03	Standard
		04	Priorities given on the floor temperature

(11) Compensating the Floor Temperature
(When the unit is equipped with an infrared floor sensor)

Offset the detected value of the infrared floor sensor with a certain temperature. This setting should be used to have the actual floor temperature detected when, for example, the unit is installed close to a wall.

Mode No.	First Code No.	Second Code No.	Contents
11 (21)	9	01	-4°C
		02	-2°C
		03	0°C
		04	2°C

[Actual procedure to use the setting]
Although the standard setting is normally used with no problem, the setting should be changed in the following cases:

Environment	Operation Mode	Problem	Setting Value
· The unit is installed close to a wall or a window. · High thermal capacity of the floor whose material is concrete, etc. · There are many heat sources like a PC. · There is a non-negligible heat source such as floor heating.	Heating	Heated too much	2°C
		Heated little	-2°C or -4°C

(12) Optional Output Switching

Using this setting, "operation output signal" and "abnormal output signal" can be provided. Output signal is output between terminals X1 and X2 of "adaptor for wiring", an optional accessory.

Mode No.	First Code No.	Second Code No.	Remarks
12 (22)	0	01	Indoor unit thermostat ON/OFF signal is provided.
		03	Output linked with "ON/OFF" of remote controller is provided.
		04	In case of "Error Display" appears on the remote controller, output is provided.

(13) External ON/OFF Input

This input is used for "ON/OFF operation" and "Protection device input" from the outside. The input is performed from the T1-T2 terminal of the operation terminal block in the el. compo. box.

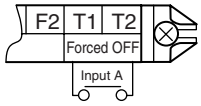

Mode No.	First Code No.	Second Code No.	Operation by Input of the Signal A
12 (22)	1	01	ON: Forced OFF (prohibition of using the remote controller) OFF: Permission of using the remote controller
		02	OFF → ON: Operation ON → OFF: Stop
		03	ON: Operation OFF: The system stops, then the applicable unit indicates "80". The other indoor units indicate "U9".

(14) Thermostat Switching

Differential value during thermostat ON/OFF control can be changed.

Mode No.	First Code No.	Second Code No.	Differential Value
12(22)	2	01	1°C
		02	0.5°C

(15) Airflow Setting when Heating Thermostat is OFF

This setting is used to set airflow when heating thermostat is OFF.

* When thermostat OFF airflow volume up mode is used, careful consideration is required before deciding installation location.

Mode No.	First Code No.	Second Code No.	Contents
12 (22)	3	01	LL airflow
		02	Set fan speed

(16) Auto Restart after Power Failure Reset

For the air conditioners with no setting for the function, the units will be left in the stop condition when the power supply is reset automatically after power failure reset or the main power supply is turned ON again after once turned OFF. However, for the air conditioners with the setting (same as factory setting), the units may start automatically after power failure reset or the main power supply turned ON again (return to the same operation condition as that of before power failure).

For the above reasons, when the unit is set enabling to utilize “Auto restart function after power failure reset”, utmost care should be paid for the occurrence of the following situation.

Caution

1. **The air conditioner starts operation suddenly after power failure reset or the main power supply turned ON again. Consequently, the user might be surprised (with question for the reason why).**
2. **In the service work, for example, turning OFF the main power switch during the unit is in operation, and turning ON the switch again after the work is completed start the unit operation (the fan rotates).**

(17) Airflow when Cooling Thermostat is OFF

This is used to set airflow to "LL airflow" when cooling thermostat is OFF.

Mode No.	First Code No.	Second Code No.	Contents
12 (22)	6	01	LL airflow
		02	Set fan speed

(18) Setting of Normal Airflow

Make the following setting according to the ceiling height. The second code No. is set to “01” at the factory.

■ **FXAQ**

Mode No.	First Code No.	Second Code No.	Setting
13(23)	0	01	Standard
		02	Slight increase
		03	Normal increase

■ **FXFQ25-80**

Mode No.	First Code No.	Second Code No.	Setting	Ceiling Height
13 (23)	0	01	Standard	≤ 2.7 m
		02	High Ceiling (1)	2.7 - 3 m
		03	Higher Ceiling (2)	3 - 3.5 m

■ **FXFQ100-125**

Mode No.	First Code No.	Second Code No.	Setting	Ceiling Height
13 (23)	0	01	Standard	≤ 3.2 m
		02	High Ceiling (1)	3.2 - 3.6 m
		03	Higher Ceiling (2)	3.6 - 4.2 m

(19) Airflow Direction Setting

Set the airflow direction of indoor units as given in the table below. (Set when sealing material kit of air discharge outlet has been installed.) The second code No. is factory set to “01”.

Mode No.	First Code No.	Second Code No.	Setting
13 (23)	1	01	F: 4-direction airflow
		02	T: 3-direction airflow
		03	W: 2-direction airflow

(20) Swing Pattern Settings

(In case of a infrared floor sensor is installed)

Set the flap operation in swing mode.
With the factory swing, flaps facing each other are synchronized to operate, and flaps placed side by side are set to swing in an opposite direction to agitate airflow to reduce temperature irregularity.
Conventional swing operation (all direction synchronized swing) can be set onsite.

Mode No.	First Code No.	Second Code No.	Contents
13 (23)	2	01	All direction synchronized swing
		03	Facing swing

(21) Operation of Downward Flow Flap: Yes/No

Only the model FXKQ has the function.
When only the front-flow is used, sets yes/no of the swing flap operation of down-flow.

Mode No.	First Code No.	Second Code No.	Setting
13 (23)	3	01	Equipped
		02	Not equipped

(22) Setting of Airflow Direction Adjustment Range

Make the following airflow direction setting according to the respective purpose.

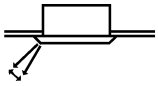

Mode No.	First Code No.	Second Code No.	Setting
13 (23)	4	01	Upward (Draft prevention)
		02	Standard
		03	Downward (Ceiling soiling prevention)

∗Some indoor unit models are not equipped with draft prevention (upward) function.

(23) Setting of the Static Pressure Selection

■ **FXDQ20-32PB, FXDQ40-63NB**

Model No.	First Code No.	Second Code No.	External Static Pressure
13 (23)	5	01	Standard (10Pa)
		02	High static pressure (30Pa)

(24) External Static Pressure Settings (for FXMQ model)

Mode No.	First Code No.	Second Code No.	External Static Pressure
13 (23)	6	01	30Pa (∗1)
		02	50Pa
		03	60Pa
		04	70Pa
		05	80Pa
		06	90Pa
		07	100Pa
		08	110Pa
		09	120Pa
		10	130Pa
		11	140Pa
		12	150Pa
		13	160Pa
		14	180Pa (∗2)
		15	200Pa (∗2)

The “Second Code No.” is set to 07 (an external static pressure of 100 Pa) at factory setting.
∗1 The FXMQ50 · 63 · 80 · 100 · 125 · 140 cannot be set to 30 Pa.
∗2 The FXMQ20 · 25 · 32 · 40 cannot be set to 180 or 200 Pa.

(25) Humidification when Heating Thermostat is OFF

Setting to "Humidification Setting" turns ON the humidifier if suction air temperature is 20ºC or more and turns OFF the humidifier if suction air temperature is 18ºC or below when the heating thermostat is OFF.

Mode No.	First Code No.	Second Code No.	Setting
15 (25)	1	01	Not equipped
		02	Equipped

(26) Setting of Direct Duct Connection

This is used when "fresh air intake kit equipped with fan" is connected. The indoor unit fan carries out residual operation for 1 minute after the thermostat is stopped. (For the purpose of preventing dust on the air filter from falling off.)

Mode No.	First Code No.	Second Code No.	Contents
15 (25)	2	01	Not equipped
		02	Equipped

(27) Interlocked Operation between Humidifier and Drain Pump

This is used to interlock the humidifier with the drain pump. When water is drained out of the unit, this setting is unnecessary.

Mode No.	First Code No.	Second Code No.	Contents
15 (25)	3	01	Not equipped
		02	Equipped

(28) Individual Setting of Ventilation

This is set to perform individual operation of heat reclaim ventilation using the remote controller/central unit when heat reclaim ventilation is built in.
(Switch only when heat reclaim ventilation is built in.)

Mode No.	First Code No.	Second Code No.	Contents
15 (25)	5	01	Not equipped
		02	Equipped

(29) Display of Contact Center
(For BRC1E62 only)

You can turn OFF the display of "DAIKIN Contact Center" as "Contact for Service Display."

Mode No.	First Code No.	Second Code No.	Contents
1b (2b)	3	01	Displayed
		02	No displayed

(30) Display of Error Codes on the Remote Controller
(For BRC1E62 only)

Error code (four digits) is displayed for limited products.
Select two-digit display if four-digit display is not preferred.

Mode No.	First Code No.	Second Code No.	Contents
1b (2b)	4	02	Two-digit display
		04	Four-digit display

(31) Key-lock Pattern Settings
(For BRC1E62 only)

Setting of key-lock pattern for the remote controller

Mode No.	First Code No.	Second Code No.	Contents
1b	12	01	No operation allowed (Cancel procedure is displayed.)
		02	No operation allowed (Cancel procedure is not displayed.)
		03	No menu operation is allowed.
		04	No menu operation is allowed any time.

∗ When the Second code No. is set to "04," no menu operation is allowed without key-lock by pressing and holding the menu button. Set the Second code No. to other than "4" to cancel it.

(32) Setting "Restricted / Permitted" of Airflow Block
(For Sensing flow type only)

Due to possibility of dew condensation, the airflow block function cannot be enabled when closure material kit, fresh air intake kit, natural / separately installed evaporation humidifier, or branch air duct.
This setting will prevent the airflow bock is advertently set to ON.
Ensure that this setting is "Disable airflow block" when using together with options listed above.

Mode No.	First Code No.	Second Code No.	Contents
1b	14	01	Airflow block permitted
		05	Airflow block restricted

(33) Room Temperature Display
(For BRC1E62 only)

A "Detailed display screen" can be selected as the display screen. This setting is used if you do not want to display "Room temperature display" on the "Detailed display screen."

Mode No.	First Code No.	Second Code No.	Contents
1c (2c)	0	01	Room temperature is not displayed.
		02	Room temperature is displayed.

2.4.2 Outdoor-Air Processing Unit - Field Setting (Remote Controller)

: Factory setting

Mode No.	First Code No.	Setting Contents	Second Code No.														
			01	02	03	04	05	06	07	08	09	10	11	12	13	14	15
10 (20)	0	Filter contamination	2500hr	1250hr	—	—	—	—	—	—	—	—	—	—	—	—	—
	3	Display time to clean air filter calculation	Display	No display	—	—	—	—	—	—	—	—	—	—	—	—	—
12 (22)	1	External ON/OFF input	Forced OFF	ON/OFF control	—	—	—	—	—	—	—	—	—	—	—	—	—
	5	Power failure automatic reset	Not equipped	Equipped	—	—	—	—	—	—	—	—	—	—	—	—	—
14 (24)	3	Discharge pipe temperature (cooling)	13°C	14	15	16	17	18	19	20	21	22	23	24	25	25	25

2.4.3 Setting of Operation Control Mode from Remote Controller (Field Setting)

The operation control mode is compatible with a variety of controls and operations by limiting the functions of the operation remote controller. Furthermore, operations such as remote controller ON/OFF can be limited in accordance with the combination conditions. (Refer to information in the next page.)
Central remote controller is normally available for operations. (Except when centralized monitor is connected)

2.4.4 Contents of Control Modes

20 modes consisting of combinations of the following 5 operation modes with temperature and operation mode setting by remote controller can be set and displayed by operation modes 0 through 19.

- ON/OFF control impossible by remote controller
  Used when you want to turn ON/OFF by central remote controller only.
  (Cannot be turned ON/OFF by remote controller.)
- OFF control only possible by remote controller
  Used when you want to turn ON by central remote controller only, and OFF by remote controller only.
- Centralized
  Used when you want to turn ON by central remote controller only, and turn ON/OFF freely by remote controller during set time.
- Individual
  Used when you want to turn ON/OFF by both central remote controller and remote controller.
- Timer operation possible by remote controller
  Used when you want to turn ON/OFF by remote controller during set time and you do not want to start operation by central remote controller when time of system start is programmed.

How to Select Operation Mode

Whether operation by remote controller will be possible or not for turning ON/OFF, controlling temperature or setting operation mode is selected and decided by the operation mode given on the right edge of the table below.

Example

ON by remote controller (Unified ON by central remote controller)	OFF by remote controller (Unified OFF by central remote controller)	OFF by remote controller	Temperature control by remote controller	Operation mode setting by remote controller	Control mode is "1".
↓ Rejection	↓ Rejection	↓ Rejection	↓ Acceptance	↓ Acceptance	

: Factory setting

Control mode	Control by remote controller					Control mode
	Operation		OFF	Temperature control	Operation mode setting	
	Unified operation, individual operation by central remote controller, or operation controlled by timer	Unified OFF, individual stop by central remote controller, or timer stop				
ON/OFF control impossible by remote controller	Rejection (Example)	Rejection (Example)	Rejection (Example)	Rejection	Acceptance	0
					Rejection	10
				Acceptance (Example)	Acceptance (Example)	1 (Example)
					Rejection	11
OFF control only possible by remote controller			Acceptance	Rejection	Acceptance	2
					Rejection	12
				Acceptance	Acceptance	3
					Rejection	13
Centralized	Acceptance			Rejection	Acceptance	4
					Rejection	14
				Acceptance	Acceptance	5
					Rejection	15
Individual		Acceptance		Rejection	Acceptance	6
					Rejection	16
				Acceptance	Acceptance	7
					Rejection	17
Timer operation possible by remote controller	Acceptance (During timer at ON position only)	Rejection (During timer at OFF position only)		Rejection	Acceptance	8
					Rejection	18
				Acceptance	Acceptance	9
					Rejection	19

Do not select “timer operation possible by remote controller” if not using a remote controller. Operation by timer is impossible in this case.

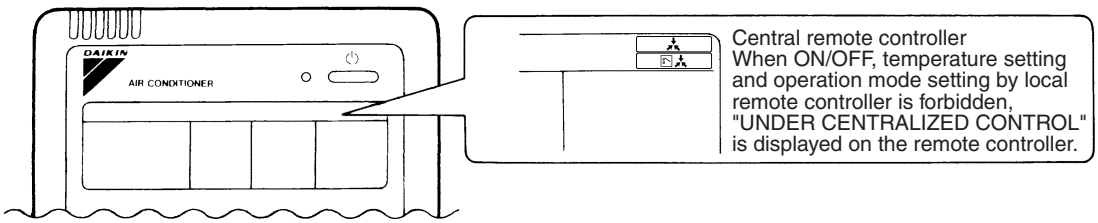

3. List of Field Setting Items

This section shows a list of field setting items possible to set at time of initial startup. For details of DIP switch setting, setting mode ("mode 2") and monitoring mode ("mode 1"), refer to information on one after the following page onwards.

3.1 Function Setting

Following settings may be required to set to comply to specific application requirements.

No	Setting item	Contents and objective of setting	Overview of setting procedure
1	Setting of COOL/ HEAT selection	■ To select cooling or heating mode by one of the following methods: 1. From 1 indoor unit remote controller (default). 2. From the optional COOL/HEAT switch. Optional board “BRP2A81∗1” required in outdoor unit. 3. Multiple outdoor systems from 1 indoor unit remote controller. 4. Multiple outdoor systems from the optional COOL/HEAT switch. Optional board “BRP2A81” required in 1 outdoor unit per zone.	2.1: Optional COOL/HEAT switch “KRC19-26B”. 2.2: Set DIP switch DS1-1 on the outdoor board to “OUT” (upper). 2.3: Install option “BRP2A81∗1” in outdoor unit. 3.1: Set the system to “MASTER” or “SLAVE” using mode 2-0. 3.2: Set COOL/HEAT zone address mode 2- 1. 4: Combine 2 and 3.
2	Setting of low noise operation	A. To reduce operation noise level through reduction of the upper limit of the fan using external input (use outdoor unit fan step 8 for normal operation). 1. Level 1: upper than fan step 6. 2. Level 2: upper fan step 5 + upper limit compressor capacity step mid level. 3. Level 3: upper fan step 5 + upper limit compressor capacity step low level.	■ Use the optional board “DTA104A61∗2”. ■ Set “mode 2” No. 12- 1. ■ Choose level by “mode 2” No. 25. ■ If required, set the “Capacity priority setting” to “ON”, by “mode 2” No. 29- 1
		B. To perform automatic low night noise operation. Start time: selectable from 20:00 to 24:00 hours (step by 2 hours). End time: selectable from 06:00 to 08:00 hours (step by 1 hour). (Note that the set time is estimated according to outdoor air temperature.)	■ Select required level by mode 2-22. ■ Select start time with mode 2-26. ■ Select end time with mode 2-27. ■ Select capacity priority setting if required by mode 2-29- 1.

For detailed description about each setting, refer to “Description field settings (mode 2 = m2) on outdoor unit control PCB” on P.118.

Note: ∗1. ABC I/P PCB kit for *VRV* IV.
∗2. External control adaptor for outdoor unit.

No	Setting item	Contents and objective of setting	Overview of setting procedure
3	Setting of demand operation	■ To limit power consumption: upper limit set on the compressor operating frequency. ■ Demand 1: % current limit 1. ■ Demand 2: % current limit 2. ■ Demand 3: forced thermostat OFF (only indoor fan operation is possible).	■ Use the optional board “DTA104A61”. ■ Wire external signal(s) to the optional adaptor “DTA104A61”.
			■ Activate input optional board “DTA104A61” “mode 2” No. 12-1. ■ Select level of demand 1, by mode 2-30. ■ Select level of demand 2, by mode 2-31.
			■ If fixed demand control is required (without adaptor “DTA104A61”), set level by mode 2-32.
4	Setting of AIRNET address	■ Make “AIRNET” address when it is connected to AIRNET monitoring, or to view detail in the map on Service Checker type III.	■ Set AIRNET address with mode 2-13.
5	High level difference outdoor to indoor	■ Required setting when level difference between outdoor and indoor units of same refrigerant exceeds standard level.	■ Set “mode 2” No. 35 to “1” if outdoor is > 40 m below indoor unit. ■ Set “mode 2” No. 49 to “1” if outdoor is > 50 m above indoor unit.
6	Setting of high static pressure	■ Set “high static pressure” in order to operate the system with duct to the outdoor unit (used at concealed installation on floors or balconies).	■ Set “mode 2” No. 18 to “ON”.
7	Evaporating temperature setting (cooling performance)	■ Setting to choose the reaction time of outdoor control on change of outdoor and cooling indoor load.	■ Set “mode 2” No. 8 to choose cooling capacity control logic between fixed, automatic or high sensible. ■ Set “mode 2” No. 83 to choose Te adjustment at start up between Powerful, Quick, Mild or Eco.
8	Condensing temperature setting (heating performance)	■ Setting to choose the reaction time of outdoor control on change of outdoor and heating indoor load.	■ Set “mode 2” No. 9 to choose heating capacity control logic between fixed, automatic or high sensible. ■ Set “mode 2” No. 82 to choose Tc adjustment at start up between Powerful, Quick, Mild or Eco.

For detailed description about each setting, refer to “Description field settings (mode 2 = m2) on outdoor unit control PCB” on P.118.

3.2 Service Setting

Mode 2	Field setting	Description	Factory setting
[2 - 0]	Cool / Heat selector setting	Cool / Heat selection setting	0: Individual
[2 - 1]	Cool / Heat unified address	Cool / Heat selector unified address	0
[2 - 2]	Low noise / demand address	Low noise demand / address	0
[2 - 8]	Te target setting	Te target temperature during cooling operation	2 : 6°C
[2 - 9]	Tc target setting	Tc target temperature during heating operation	6 : 46°C
[2 - 12]	Low noise / demand setting	Low noise / demand activation setting (under external control adaptor functionality)	0 : OFF
[2 - 13]	AIRNET address	AIRNET address	0
[2 - 14]	Charged refrigerant amount	Input additional refrigerant amount charged (required for automatic leak detection operation)	0 : OFF
[2 - 18]	High ESP setting FAN	Fan high static pressure setting	0 : OFF
[2 - 22]	Low noise setting at night time	Automatic low noise setting and level during night time	0 : OFF
[2 - 25]	Low noise setting (level)	Low noise operation level via the external control	2 : Level 2
[2 - 26]	Start time low noise	Start time low night noise operation	2 : 22 : 00
[2 - 27]	End time low noise	Stop time low night noise operation	3 : 08 : 00
[2 - 29]	Capacity priority setting (over low noise)	Capacity priority setting over low noise (activation)	0 : OFF
[2 - 30]	Level demand 1	Power consumption limitation level (step 1) via the external control adaptor	3 : 70 %
[2 - 31]	Level demand 2	Power consumption limitation level (step 2) via the external control adaptor	1 : 40 %
[2 - 32]	Force demand set (no external PCB required)	Continuous demand operation activation	0 : OFF
[2 - 81]	Cooling comfort setting	Cooling comfort setting	1 : Mild
[2 - 83]	Master user interface setting	Master user interface allocation in case *VRV* DX indoor units and RA DX indoor units are used at the same time	1 : RA DX master
[2 - 85]	Interval timer for automatic leak detection function	Automatic leak detection interval timer	0 : 365 days
[2 - 86]	Automatic leak detection activation	Automatic leak detection activation	0 : OFF
[2 - 88]	Gathering detailed refrigerant information during test operation	Gathering detailed refrigerant information during test operation	0 : Active

For detailed description about each setting, refer to “Description field settings (mode 2 = m2) on outdoor unit control PCB” on P.118.

3.3 Settings by DIP Switches

For factory mounted board only use DIP switch DS1-1 if required.

DIP switch		Setting item	Description
No.	Setting		
DS1-1	ON	COOL/HEAT select	Used to choose source to select Cooling/Heating/ fan only. Source can be or indoor remote controller, or optional cool/heat switch wired to option “BRP2A81”.
	OFF (Factory setting)		
DS1-2 ~DS1-4	ON	not used	Do not change the factory settings.
	OFF (Factory setting)		

3.4 DIP Switch Setting Mounting a Spare PCB

Caution:

- After replacement with spare PCB, be sure to make settings shown in the table on the following page. The procedure for making settings of spare PCB is different from that used for factory settings described above. Be sure to refer to the table shown on the following page in order to make settings of spare PCB after replacement.
- Enforce a re-initialization of communication: hold press button BS3 “RETURN” for minimum 5 seconds.
- After initialization, a test operation is required from outdoor unit (hold BS2 “SET” till indication “t0 1” appears).

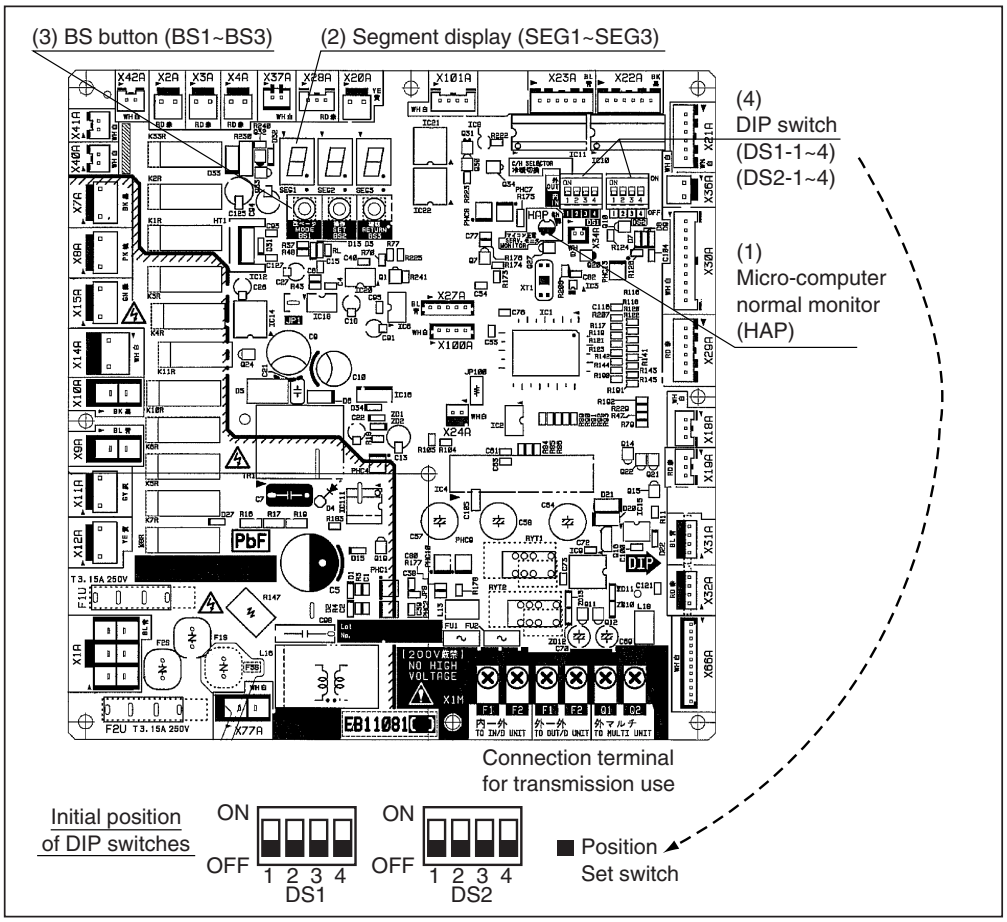

(1) Micro-computer normal monitor
This monitor blinks while in normal operation, and turns ON or OFF when an error occurs.

(2) 7 segment display
· Used to check the transmission.
· Used to display the transmission state between indoor and outdoor units.
· Used to display the contents of error.
· Used to display the contents of field setting.

(3) BS button
Used to change mode.

(4) DIP switch
Used to make field settings.

The figure below shows the required position of the DIP switches on spare PCB for RXYQ-T. Change DIP switches at time of power disconnected.

Application model	The setting method (■represents the position of switches)	
RXYQ6TY1	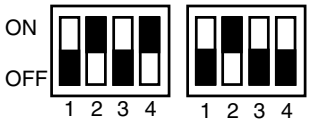	Set DS1-2, DS1-4 and DS2-2 to ON.
RXYQ6TY1E		
RXYQ8TY1		
RXYQ8TY1E		
RXYQ10TY1	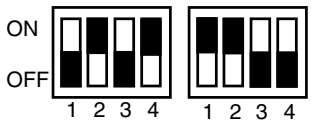	Set DS1-2, DS1-4, DS2-1 and DS2-2 to ON.
RXYQ10TY1E		
RXYQ12TY1	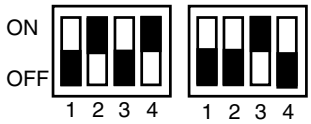	Set DS1-2, DS1-4 and DS2-3 to ON.
RXYQ12TY1E		
RXYQ14TY1	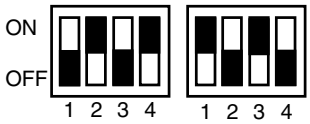	Set DS1-2, DS1-4, DS2-1 and DS2-3 to ON.
RXYQ14TY1E		
RXYQ16TY1	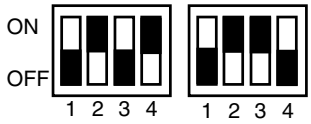	Set DS1-2, DS1-4, DS2-2 and DS2-3 to ON.
RXYQ16TY1E		
RXYQ18TY1		
RXYQ18TY1E		
RXYQ20TY1	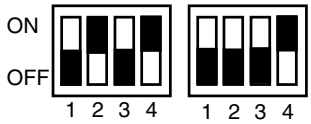	Set DS1-2, DS1-4 and DS2-4 to ON.
RXYQ20TY1E		

4. Settings by BS Buttons

The following settings can be made using the BS buttons on the PCB.
In case of a multi outdoor system, make these settings with the master outdoor unit (settings made with a slave unit are disabled).

BS buttons

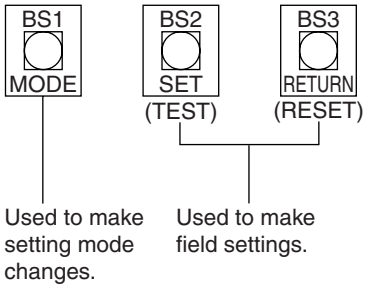

7 segment display (SEG1-3)

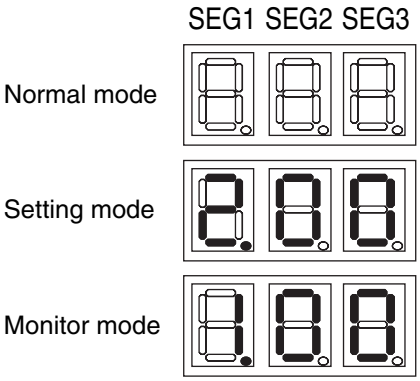

- Normal mode:
  - Blank: If no abnormality is detected and initialization of communication was completed.
  - Flashing combination of letter and number (4 digits): Error code detected by outdoor control or trouble by communication.
- Setting mode: Used to make changes to operating status, performance settings or address setting.
- Monitor mode: Used to verify contents of settings, quantity of units, current value of some parameters during operation of outdoor unit.

4.1 Normal Mode

1. Indoor/outdoor transmission status: Used to check for the initial status of indoor/outdoor transmission.

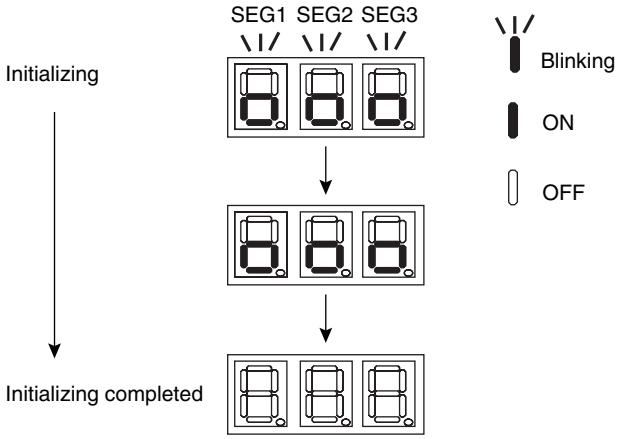

2. Error contents: Used to display an error content.

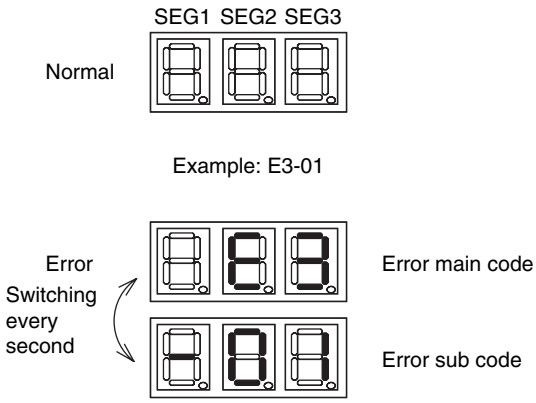

■ **Mode changing procedure can be selected using the BS1 (MODE) button as shown below:**

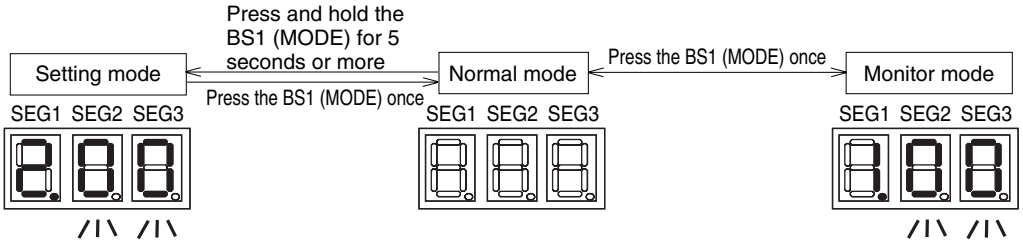

■ **Selection between Normal mode, Mode 1 and Mode 2.**

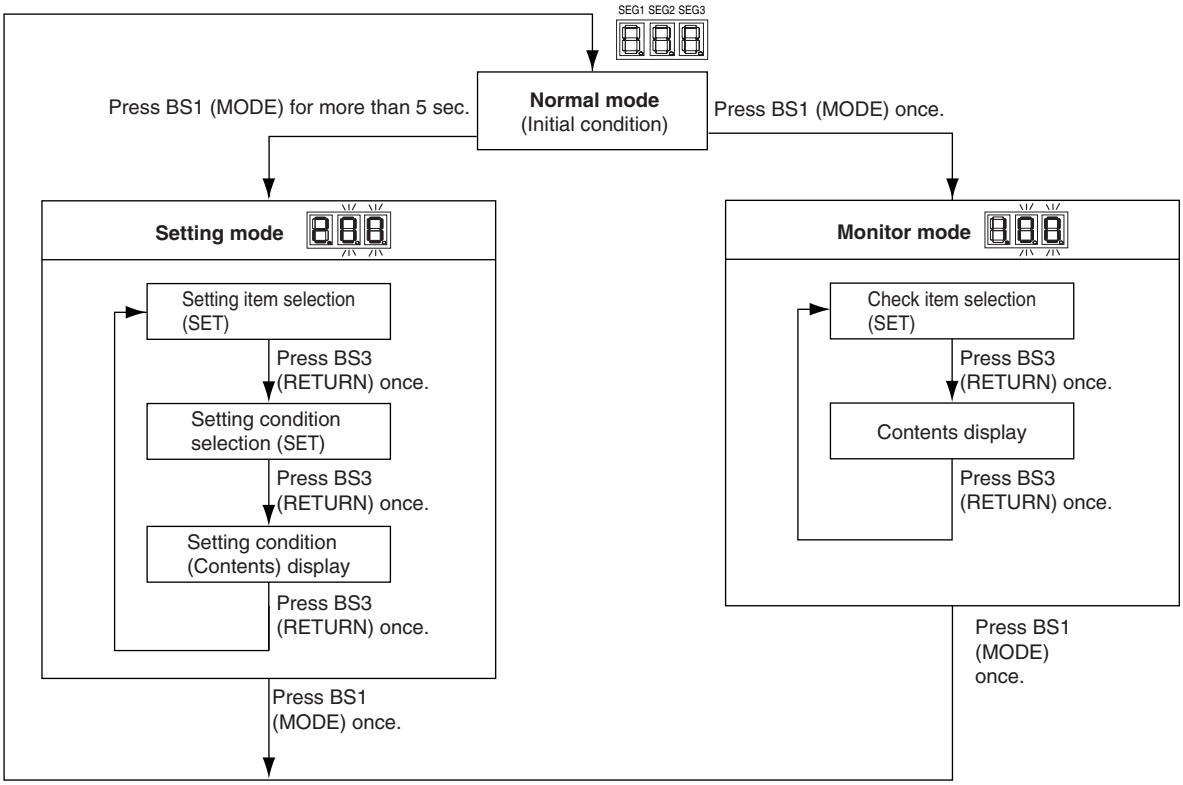

4.2 Setting Mode (= Mode 2)

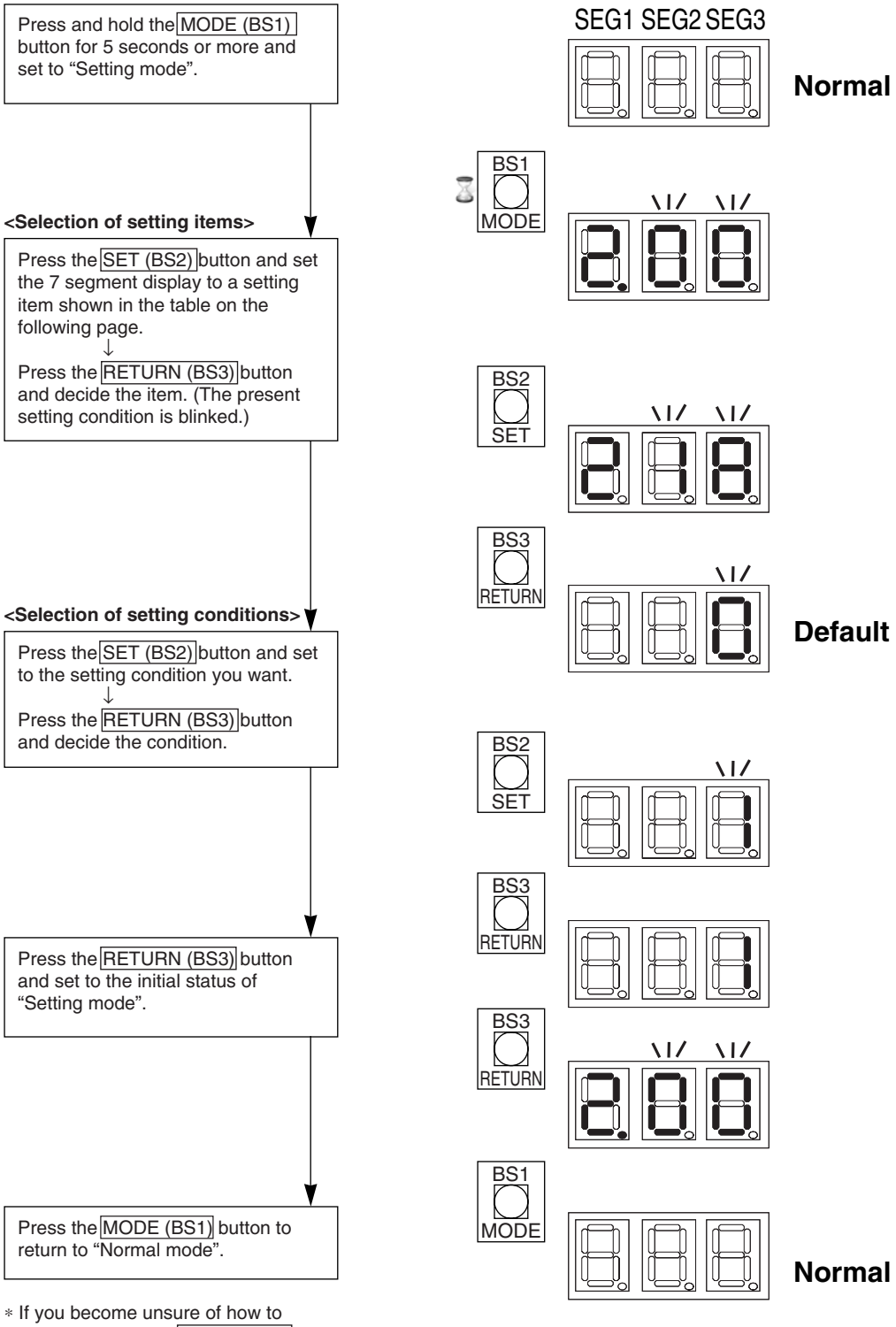

∗ If you become unsure of how to proceed, press the MODE (BS1) button and return to “Normal mode”.

Legend Segment : OFF : ON : BLINKS : hold 5 seconds

4.2.1 Overview Settings “mode 2”

This overview shows the available settings by using the press buttons on the outdoor unit board.

No. *1	Item	Description	7 segment display			Description	7 segment display Range		
			SEG 1	SEG 2	SEG 3		SEG 1	SEG 2	SEG 3
0	COOL/HEAT selection	Several systems as 1 zone change over COOL/HEAT: ■ INDIVIDUAL: *VRV* indoor unit or A-B-C input set mode. ■ MASTER: System is the COOL/HEAT master unit. ■ SLAVE: System is not a COOL/HEAT master.	2.	0	0	**Individual** Unified master Unified slave			**0** 1 2
1	COOL/HEAT unified address	Used to make address setting for unified cooling/heating operation.	2.	0	1	Address **0** ~ 31		~ 3	**0** ~ 1
2	Low noise/ demand address	Used to make address setting for low noise/demand operation.	2.	0	2	Address **0** ~ 31		~ 3	**0** ~ 1
5	Indoor unit forced fan H	Used to force the fan of indoor unit to H tap.	2.	0	5	**Normal operation** Indoor fan H			**0** 1
6	Forced thermostat	Used to force all indoor units to operate forced thermo.ON.	2.	0	6	**Normal operation** Forced thermo.ON			**0** 1
8	Te setting	Used to make setting of targeted evaporating temperature for cooling operation.	2.	0	8	Auto (6~11°C) Low level = 3°C **Standard = 6°C** High Sens. 7°C High Sens. 8°C High Sens. 9°C High Sens.10°C High Sens.11°C			0 1 **2** 3 4 5 6 7
9	Tc setting	Used to make setting of targeted condensing temperature for heating operation.	2.	0	9	Auto (38~49°C) Low = 41°C Normal = 43°C **High = 46°C**			0 1 3 **6**
10	Defrost selection setting	Used to adjust the defrost start temperature of outdoor coil, to initiate defrosting earlier/later.	2.	1	0	Defrost IN -2° **Normal** Defrost IN +2°			0 **1** 2
12	External low noise setting/ demand setting	Used to receive external low noise or demand signal.	2.	1	2	Input LNO/DE : **NO** : YES			**0** 1
13	AIRNET address	Used to set address of AIRNET	2.	1	3	Address **0** ~ 63		~ 3	**0** ~ 1
20	Additional refrigerant charge	Used to perform additional refrigerant charging operation (compressor operation).	2.	2	0	Refrigerant charging **OFF** ON			**0** 1
21	Refrigerant recovery and vacuuming mode setting	Used to set the system to refrigerant recovery mode (without compressor run).	2.	2	1	Refrigerant recovery **OFF** ON			**0** 1
22	Low night noise operation	Automatic low night noise operation. Time for the operation is subject to the start and end time settings.	2.	2	2	**OFF** Level 1 Level 2 Level 3			**0** 1 2 3

*1: Numbers in the "No." column represent the number of times to press the BS button.

* : Setting does not return to factory setting when exit mode 2. To cancel the function, change setting manually to factory setting.

For detailed description about each setting, refer to “Description field settings (mode 2 = m2) on outdoor unit control PCB” on P.118.

Indication **bold** = factory setting.

No. *1	Item	Description	7 segment display			Description	7 segment display Range		
			SEG 1	SEG 2	SEG 3		SEG 1	SEG 2	SEG 3
25	External low noise level setting	Low noise level when the external low noise signal is input at option DTA104A61.	2.	2	5	Level 1 **Level 2** Level 3			1 **2** 3
26	Low night noise operation start setting	Time to start automatic “low night noise” operation. (“Low night noise” level setting should also be made.)	2.	2	6	About 20:00 **About 22:00** About 24:00			1 **2** 3
27	Low night noise operation end setting	Time to end automatic “low night noise” operation. (“Low night noise” level setting should also be made.)	2.	2	7	About 06:00 About 07:00 **About 08:00**			1 2 **3**
28	Power transistor check mode	Used to troubleshoot DC compressor. Inverter waveforms are output without wire connections to the compressor. It is useful to determine whether the relevant trouble has resulted from the compressor or inverter PCB.	2.	2	8	**OFF** ON (10 Hz)			**0** 1
29	Capacity priority setting	Cancel the low noise level control if capacity is required while low noise operation or low night noise operation is in progress.	2.	2	9	**OFF** ON			**0** 1
30	Demand 1 setting	Used to make a change to the targeted power consumption level when the demand 1 control signal is inputted.	2.	3	0	Level 1 (60%) Level 2 (65%) **Level 3 (70%)** Level 4 (75%) Level 5 (80%) Level 6 (85%) Level 7 (90%) Level 8 (95%)			1 2 **3** 4 5 6 7 8
31	Demand 2 setting	Used to use a targeted power current level when the demand 2 control signal is inputted.	2.	3	1	**Level 1 (40%)** Level 2 (50%) Level 3 (55%)			1 2 3
32	Normal demand setting	Used to set permanent demand 1 or 2 control without inputting any external signal.	2.	3	2	**OFF** Demand 1 (2-30) Demand 2 (2-31)			**0** 1 2
34	Indoor fan upper limit	Forced fan speed to low indoor units thermostat ON if total indoor thermostat-ON > index 130.	2.	3	34	**Cooling and heating** Heating only never			**0** 1 2
35	Outdoor > 40 m below indoor	To increase Tc target heating.	2.	3	35	Level > 40 m **Level max. 40 m** Do not use			0 1 ~7
38	Emergency operation (master)	To prohibit a compressor or complete in “Master”. Since module is permanent disabled, immediately replace the defective component(s).	2.	3	8	**OFF** Master INV. 1 OFF Master INV. 2 OFF Master unit OFF			**0** 1 2 3
39	Emergency operation (slave 1)	To prohibit a compressor or complete “Slave 1”. Since module is permanent disabled, immediately replace the defective component(s).	2.	3	9	**OFF** Slave 1 INV. 1 OFF Slave 1 INV. 2 OFF Slave 1 unit OFF			**0** 1 2 3
40	Emergency operation (slave 2)	To prohibit a compressor or complete “Slave 2”. Since module is permanent disabled, immediately replace the defective component(s).	2.	4	0	**OFF** Slave 2 INV. 1 OFF Slave 2 INV. 2 OFF Slave 2 unit OFF			**0** 1 2 3

*1: Numbers in the "No." column represent the number of times to press the BS button.

* : Setting does not return to factory setting when exit mode 2. To cancel the function, change setting manually to factory setting.

* : Once function is activated “t0 1” appears. To stop current function, press once BS3 “Return” button.

For detailed description about each setting, refer to “Description field settings (mode 2 = m2) on outdoor unit control PCB” on P.118.

Indication **bold** = factory setting.

No. *1	Item	Description	7 segment display			Description	7 segment display Range		
			SEG 1	SEG 2	SEG 3		SEG 1	SEG 2	SEG 3
42	Outdoor unit fan	Outdoor unit fan noise countermeasure (limit fan speed).	2.	4	2	**Standard** Mode A Mode B			**0** 1 2
43	Defrost four way valve	At time defrost starts/end.	2.	4	3	**Capacity priority** Compressor OFF			**0** 1
49	Outdoor > 50 m above indoor	Height difference setting max. 90 m.	2.	4	9	**Off (max. 50 m)** On (max 90 m)			**0** 1
50	Defrost	Priority during defrost.	2.	5	0	**Indoor priority** Defrost priority			**0** 1
51	Sequence multi outdoor	Sequence addressing between master and slave units.	2	5	1	**Automatic** Forced master Forded slave 1 Forced slave 2			**0** 1 2 3

*1: Numbers in the "No." column represent the number of times to press the BS button.
For detailed description about each setting, refer to “Description field settings (mode 2 = m2) on outdoor unit control PCB” on P.118.
Indication **bold** = factory setting.

4.2.2 The Factory Setting for All Field Settings - mode 2

No.	Item	Description factory setting	7 seg display SEG			No.	Item	Description factory setting	7 seg display SEG		
			1	2	3				1	2	3
0	C / H selection	Individual			0	26	Auto low night noise operation start	22 : 00			2
1	C / H unified address	Address 0			0	27	Auto low night noise operation end	8 : 00			3
2	Low night noise operation / DE address	Address 0			0	28	Power trans check	Disabled			0
3	Do not change contents				0	29	Capacity priority	Disabled			0
4					0	30	Demand level 1	70 %			3
5	Indoor fan H	Normal			0	31	Demand level 2	40 %			1
6	Forced thermo. - ON	Normal			0	32	Normal demand	Disabled			0
7	Do not change contents				0	33	Do not change contents				0
8	Te setting	6°C			2	34	L-tap > 130%	All modes			0
9	Tc setting	46°C			6	35	Outdoor > 40m	Disabled			1
10	Defrost selection	Normal			1	36	Do not change contents				2
11	Do not change contents				0	37					0
12	Extern. low night noise operation / DE	Disabled			0	38	Emergency (Master)	Disabled			0
13	AIRNET address	Address 0			0	39	Emergency (Slave 1)	Disabled			0
14	R410A add charge	No input			0	40	Emergency (Slave 2)	Disabled			0
15	Do not change contents				0	41	Do not change contents				0
16					0	42	Outdoor unit fan	Standard			0
17					0	43	Sound defrost	Capacity			0
18	Outdoor fan ESP	Normal			0	44	Do not change contents				0
19	Do not change contents				0	45					0
20	Add refrigerant charge	Disabled			0	46					0
21	Recovery, vacuuming	Disabled			0	47					0
22	Auto low night noise operation level	Disabled			0	48					0
23	Do not change contents				0	49	Outdoor > 50m	Disabled			0
24					0	50	Defrost continuous heat	Enabled			0
25	External low night noise operation	Level 2			2	51	Sequence multi	Automatic			0

For detailed description about each setting, refer to “Description field settings (mode 2 = m2) on outdoor unit control PCB” on P.118.

4.3 Monitor Mode

In the monitor mode, information can be retrieved about settings related to performance, addresses, number of units and actual operation data.

4.3.1 Retrievable Data by “Configurator”

Mode 1	Setting	Description
[1 - 0]	Master / slave 1 / slave 2	Shows whether the unit you check is a master
[1 - 10]	Total connected indoor units	Shows the total number of connected indoor units
[1 - 13]	Total connected outdoor units	Shows the total number of outdoor units
[1 - 17]	Contents of error (latest)	Shows the latest error code
[1 - 18]	Contents of error (1 cycle before)	Shows the 2nd last error code
[1 - 19]	Contents of error (2 cycle before)	Shows the 3rd last error code
[1 - 23]	Contents of retry (latest)	Latest system retry
[1 - 24]	Contents of retry (1 cycle before)	Previous system retry (1)
[1 - 25]	Contents of retry (2 cycle before)	Previous system retry (2)
[1 - 34]	Days remaining till the next automatic leak detection	Shows the remaining days till the next automatic leak
[1 - 35]	Result of the last leak detection operation	Shows the result of the latest automatic leak detection
[1 - 36]	Result of the last leak detection operation (1 before)	Shows the result of the 2nd last automatic leak detection
[1 - 37]	Result of the last leak detection operation (2 before)	Shows the result of the 3rd last automatic leak detection
[1 - 38]	Number of connected RA DX indoor units	Shows the number of RA DX indoor units connected to the system
[1 - 39]	Number of connected hydrobox indoor units	Shows the number of hydroboxes indoor units connected to the system

4.3.2 Retrieve Data by Using BS Button Outdoor Main Control PCB

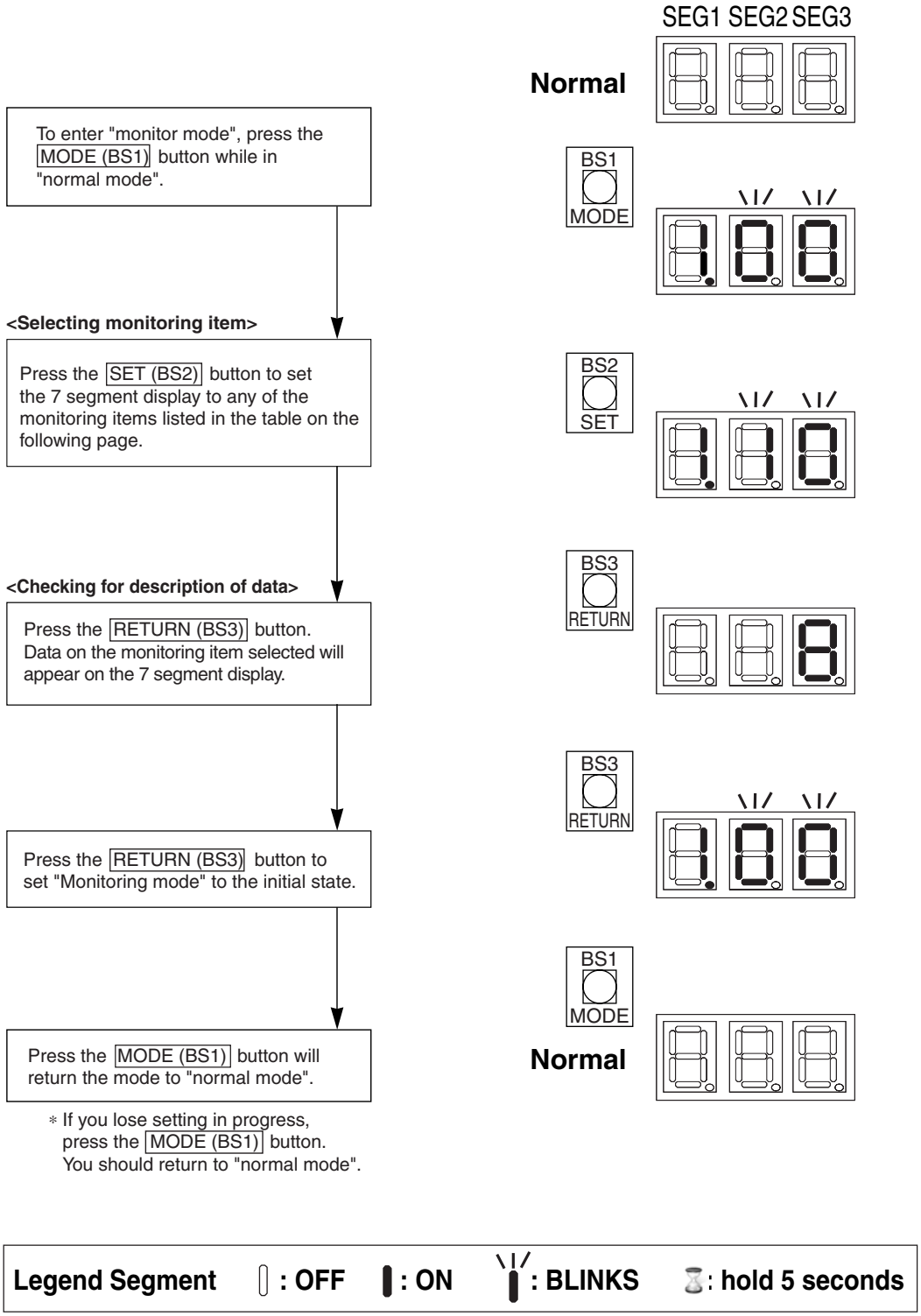

Legend Segment : OFF : ON : BLINKS : hold 5 seconds

No. ∗1	Monitoring item				Data display			
	Item	7 segment display			Contents	7 segment display		
		SEG 1	SEG 2	SEG 3		SEG 1	SEG 2	SEG 3
0	Master/slave outdoor unit	1.	0	0	Undefined Master unit Slave 1 unit Slave 2 unit			- 0 1 2
1	Low noise operation state	1.	0	1	In normal operation In low noise operation			0 1
2	Demand operation state	1.	0	2	In normal operation In demand operation			0 1
3	Automatic backup operation state	1.	0	3	OFF ON			0 1
4	Defrost selection setting	1.	0	4	Slow defrost Normal Quick defrost			0 1 2
5	Te setting	1.	0	5	Automatic Low 3°C Normal 6°C High sensible 7°C High sensible 8°C High sensible 9°C High sensible 10°C High sensible 11°C			0 1 2 3 4 5 6 7
6	Tc setting	1.	0	6	Automatic Normal 41°C Low sensible 43°C High 46°C			0 1 3 6
7	COOL/HEAT unified address	1.	0	7	Possible 0-31		- 3	0 1
8	Low noise/demand address	1.	0	8	Possible 0-31		- 3	0 1
9	AIRNET address	1.	0	9	Possible 0-63		- 6	0 3
10	Number of indoor unit connected (refer to ∗2)	1.	1	0	Possible 0-63		- 6	0 3
13	Number of outdoor units (refer to ∗3)	1.	1	3	Possible 0-63		- 6	0 3
15	Number of units in zone	1.	1	5	Possible 0-63		- 6	0 3
16	Number of all indoor units of several systems if “F1F2 OUT/D is wired between systems (refer to ∗4)	1.	1	6	Possible 0-128	- 1	- 2	0 8
17	Description of error (latest)	1.	1	7	Refer to information in "4.3.3 Check for Descriptions of Errors/Retries".			
18	Description of error (1 cycle before)	1.	1	8				
19	Description of error (2 cycles before)	1.	1	9				

∗1: Numbers in the "No." column represent the number of times to press the BS button.

∗2: Number of indoor units connected: represents the number of indoor units connected to a single outdoor system.

∗3: Number of outdoor units: represents the number of outdoor units connected to a single DIII-NET that is a communication line.

∗4: Number of terminal units: represents the number of indoor units connected to a single DIII-NET that is a communication line.

No. *1	Monitoring item				Data display			
	Item	7 segment display			Contents	7 segment display		
		SEG 1	SEG 2	SEG 3		SEG 1	SEG 2	SEG 3
23	Description of retry (latest)	1.	2	3	Refer to information in "4.3.3 Check for Descriptions of Errors/Retries".			
24	Description of retry (1 cycle before)	1.	2	4				
25	Description of retry (2 cycles before)	1.	2	5				
28	Number of outdoor units connected to a multi system	1.	2	8	Possible 0-63		- 6	0 3
32	Outdoor board status judgement	1	3	2	0 = standard judgement 1 = normal 2 = abnormal			0 1 2
33	Number of abnormal status judgement outdoor board	1	3	3	Possible 0-15		- 1	0 5
38	Number of connected RA indoor (through BP unit)	1	3	8	Possible 0-63		- 6	0 3
40	Cooling comfort setting (see mode 2 No. 8)	1	4	0	Possible 0-7		- 6	0 3
41	Heating comfort setting (see mode 2 No. 9)	1	4	1	Possible 0-6		- 6	0 3
42 *2	High pressure (MPa)	1	4	2	Possible 0.1-9.99	0. 9.	1 9	0 9
43 *2	Low pressure (MPa)	1	4	3	Possible 0.1-9.99	0. 9.	1 9	0 9
44 *2	Compressor total frequency (Hz)	1	4	4	0-999	0 9	0 9	0 9
45 *2	Opening pulses EV main “Y1E” (pulses / 10)	1	4	5	0-999	0 9	0 9	0 9
46 *2	Discharge pipe temperature R21T (°C)	1	4	6	-99-999	- 9	9 9	9 9
47 *2	Discharge pipe temperature R22T (°C)	1	4	7	-99-999	- 9	9 9	9 9
48 *2	Compressor body temperature R8T (°C)	1	4	8	-99-999	- 9	9 9	9 9
49 *2	Air temperature R1T (°C)	1	4	9	-99-999	- 9	9 9	9 9
50 *2	Accumulator inlet temperature R3T (°C)	1	5	0	-99-999	- 9	9 9	9 9
51 *2	Gas outlet sub-cool heat-exchanger R6T (°C)	1	5	1	-99-999	- 9	9 9	9 9
52 *2	Coil temperature R7T (°C)	1	5	2	-99-999	- 9	9 9	9 9
53 *2	Compressor operation hours / 100	1	5	3	0-999	0 9	0 9	0 9

*1: Numbers in the "No." column represent the number of times to press the BS button.

*2: Available from software ID “30-28” (to check current software version, refer to monitor mode No. 20).

4.3.3 Check for Descriptions of Errors/Retries

Follow the procedure described below. This procedure is different than indicated in previous “Monitor mode”.

The error codes for forced stop outdoor or retry are item:

- 17, 18, 19: description of error (outdoor system stopped operation).
- 23, 24, 25: description of retry.

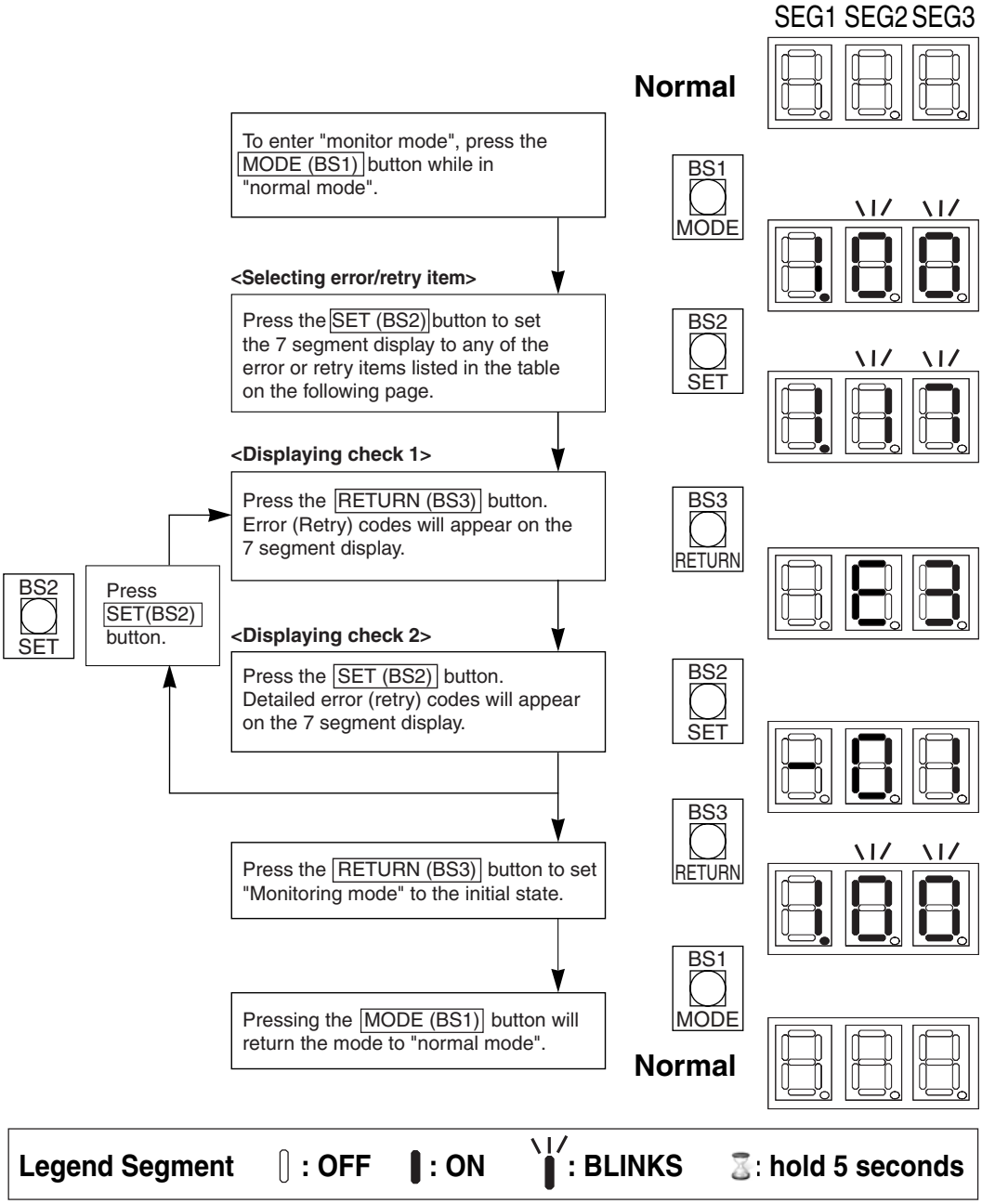

- The tables on next pages show a full list of possible error codes displayed on the 3 digit 7 segment display of the outdoor unit. The error code contains an upper and lower digit. To scroll between upper and lower error digit, use the “Set” button BS2 when the select number in the monitoring mode is chosen:
  - No. 17-19 for error = system operated stopped.
  - No. 23-25 for retry = system attempts to keep operation.
- The errors cover problems detected in the outdoor unit or the communication.
- Errors detected on the indoor unit are not shown on the outdoor display. For inspecting error code on indoor unit, please consult:
  - Display of the remote controller connected to the indoor units.
  - If there are no remote controllers, there should be a central control device set up. Prior to start up, make the necessary group number settings on each indoor unit.

Error code			Description of error	Upper code			Lower code		
				SEG 1	SEG 2	SEG 3	SEG 1	SEG 2	SEG 3
E1	-	1	Outdoor unit PCB error		E	1	-	0	1
	-	2	Defective outdoor unit PCB				-	0	2
E2	-	1	Ground leakage detection error – Master unit		E	2	-	0	1
	-	2	Ground leakage detection error – Slave unit 1				-	0	2
	-	3	Ground leakage detection error – Slave unit 2				-	0	3
	-	6	Missing of ground leakage detection core – Master unit				-	0	6
	-	7	Missing of ground leakage detection core – Slave unit 1				-	0	7
	-	8	Missing of ground leakage detection core – Slave unit 2				-	0	8
E3	-	1	Actuation of high pressure switch – Master unit		E	3	-	0	1
	-	2	High pressure - refrigerant overcharge or closed stop valve – Master unit				-	0	2
	-	3	Actuation of high pressure switch – Slave unit 1				-	0	3
	-	4	High pressure - refrigerant overcharge or closed stop valve – Slave unit 1				-	0	4
	-	5	Actuation of high pressure switch – Slave unit 2				-	0	5
	-	6	High pressure - refrigerant overcharge or closed stop valve – Slave unit 2				-	0	6
	-	13	Liquid stop valve check error – Master unit				-	1	3
	-	14	Liquid stop valve check error – Slave unit 1				-	1	4
	-	15	Liquid stop valve check error – Slave unit 2				-	1	5
	-	18	Overall retry of high pressure switch				-	1	8
E4	-	1	Low pressure sensor error – Master unit		E	4	-	0	1
	-	2	Low pressure sensor error – Slave unit 1				-	0	2
	-	3	Low pressure sensor error – Slave unit 2				-	0	3
E5	-	1	Inverter compressor 1 lock – Master unit		E	5	-	0	1
	-	2	Inverter compressor 1 lock – Slave unit 1				-	0	2
	-	3	Inverter compressor 1 lock – Slave unit 2				-	0	3
	-	7	Inverter compressor 2 lock – Master unit				-	0	7
	-	8	Inverter compressor 2 lock – Slave unit 1				-	0	8
	-	9	Inverter compressor 2 lock – Slave unit 2				-	0	9
E7	-	1	Fan motor 1 lock – Master unit		E	7	-	0	1
	-	2	Fan motor 2 lock – Master unit				-	0	2
	-	5	Fan motor 1 momentary overcurrent – Master unit				-	0	5
	-	6	Fan motor 2 momentary overcurrent – Master unit				-	0	6
	-	9	Fan motor 1 IPM error – Master unit				-	0	9
	-	10	Fan motor 2 IPM error – Master unit				-	0	9
	-	13	Fan motor 1 lock – Slave unit 1				-	1	3
	-	14	Fan motor 2 lock – Slave unit 1				-	1	4
	-	17	Fan motor 1 momentary overcurrent – Slave unit 1				-	1	7
	-	18	Fan motor 2 momentary overcurrent – Slave unit 1				-	1	8
	-	21	Fan motor 1 IPM error – Slave unit 1				-	2	1
	-	22	Fan motor 2 IPM error – Slave unit 1				-	2	2
	-	25	Fan motor 1 lock – Slave unit 2				-	2	5
	-	26	Fan motor 1 lock – Slave unit 2				-	2	6
	-	29	Fan motor 1 momentary overcurrent – Slave unit 2				-	2	9
	-	30	Fan motor 2 momentary overcurrent – Slave unit 2				-	3	0
	-	33	Fan motor 1 IPM error – Slave unit 2				-	3	3
	-	34	Fan motor 2 IPM error – Slave unit 2				-	3	4

Error code		Description of error	Upper code			Lower code		
			SEG 1	SEG 2	SEG 3	SEG 1	SEG 2	SEG 3
E9	- 1	Electronic expansion valve 2 coil (Y2E) error – Master unit		E	9	-	0	1
	- 3	Electronic expansion valve 3 coil (Y3E) error – Master unit				-	0	3
	- 4	Electronic expansion valve 1 coil (Y1E) error – Master unit				-	0	4
	- 5	Electronic expansion valve 2 coil (Y2E) error – Slave unit 1				-	0	5
	- 6	Electronic expansion valve 3 coil (Y3E) error – Slave unit 1				-	0	6
	- 7	Electronic expansion valve 1 coil (Y1E) error – Slave unit 1				-	0	7
	- 8	Electronic expansion valve 2 coil (Y2E) error – Slave unit 2				-	0	8
	- 9	Electronic expansion valve 3 coil (Y3E) error – Slave unit 2				-	0	9
	- 10	Electronic expansion valve 1 coil (Y1E) error – Slave unit 2				-	1	0
	- 20	Defective electronic expansion valve 1 coil (Y1E) – Master unit				-	2	0
	- 21	Defective electronic expansion valve 1 coil (Y1E) – Slave unit 1				-	2	1
	- 22	Defective electronic expansion valve 1 coil (Y1E) – Slave unit 2				-	2	2
	- 23	Defective electronic expansion valve 2 coil (Y2E) – Master unit				-	2	3
	- 24	Defective electronic expansion valve 2 coil (Y2E) – Slave unit 1				-	2	4
	- 25	Defective electronic expansion valve 2 coil (Y2E) – Slave unit 2				-	2	5
F3	- 1	Discharge pipe high temperature error – Master unit		F	3	-	1	1
	- 3	Discharge pipe high temperature error – Slave unit 1				-	1	3
	- 5	Discharge pipe high temperature error – Slave unit 2				-	1	5
	- 20	Compressor overheat error – Master unit				-	2	0
	- 21	Compressor overheat error – Slave unit 1				-	2	1
	- 22	Compressor overheat error – Slave unit 2				-	2	2
F4	- 1	Wet alarm		F	4	-	0	1
	- 2	Error detection - Wet alarm INV. 1 – Master unit				-	0	2
	- 3	Error detection - Wet alarm INV. 2 – Master unit				-	0	3
	- 4	Error detection - Wet alarm INV. 1 – Slave unit 1				-	0	4
	- 5	Error detection - Wet alarm INV. 2 – Slave unit 1				-	0	5
	- 6	Error detection - Wet alarm INV. 1 – Slave unit 2				-	0	6
	- 7	Error detection - Wet alarm INV. 2 – Slave unit 2				-	0	7
	- 8	Error detection - Wet error INV. 1 – Master unit				-	0	8
	- 9	Error detection - Wet error INV. 2 – Master unit				-	0	9
	- 10	Error detection - Wet error INV. 1 – Slave unit 1				-	1	0
	- 11	Error detection - Wet error INV. 2 – Slave unit 1				-	1	1
	- 12	Error detection - Wet error INV. 1 – Slave unit 2				-	1	2
	- 13	Error detection - Wet error INV. 2 – Slave unit 2				-	1	3
	- 14	Error detection - Indoor unit failure alarm				-	1	4
F6	- 2	Refrigerant overcharged		F	6	-	0	2
H3	- 2	Connection error (Control & INV. 1 (A3P)) – Master unit		H	3	-	0	2
	- 3	Connection error (Control & INV. 2 (A6P)) – Master unit				-	0	3
	- 4	Connection error (Control & INV. 1 (A3P)) – Slave unit 1				-	0	4
	- 5	Connection error (Control & INV. 2 (A6P)) – Slave unit 1				-	0	5
	- 6	Connection error (Control & INV. 1 (A3P)) – Slave unit 2				-	0	6
	- 7	Connection error (Control & INV. 2 (A6P)) – Slave unit 2				-	0	7

Error code			Description of error	Upper code			Lower code		
				SEG 1	SEG 2	SEG 3	SEG 1	SEG 2	SEG 3
H7	-	1	Fan motor 1 signal detection error – Master unit		H	7	-	0	1
	-	2	Fan motor 2 signal detection error – Master unit				-	0	2
	-	5	Fan motor 1 signal detection error – Slave unit 1				-	0	5
	-	6	Fan motor 2 signal detection error – Slave unit 1				-	0	6
	-	9	Fan motor 1 signal detection error – Slave unit 2				-	0	9
	-	10	Fan motor 2 signal detection error – Slave unit 2				-	1	0
H9	-	1	Defective outdoor air thermistor – Master unit		H	9	-	0	1
	-	2	Defective outdoor air thermistor – Slave unit 1				-	0	2
	-	3	Defective outdoor air thermistor – Slave unit 2				-	0	3
J3	-	16	Defective discharge pipe 1 thermistor: Open – Master unit		J	3	-	1	6
	-	17	Defective discharge pipe 1 thermistor: Short – Master unit				-	1	7
	-	22	Defective discharge pipe 1 thermistor: Open – Slave unit 1				-	2	2
	-	23	Defective discharge pipe 1 thermistor: Short – Slave unit 1				-	2	3
	-	28	Defective discharge pipe 1 thermistor: Open – Slave unit 2				-	2	8
	-	29	Defective discharge pipe 1 thermistor: Short – Slave unit 2				-	2	9
J3	-	18	Defective discharge pipe 2 thermistor: Open – Master unit		J	3	-	1	8
	-	19	Defective discharge pipe 2 thermistor: Short – Master unit				-	1	9
	-	24	Defective discharge pipe 2 thermistor: Open – Slave unit 1				-	2	4
	-	25	Defective discharge pipe 2 thermistor: Short – Slave unit 1				-	2	5
	-	30	Defective discharge pipe 2 thermistor: Open – Slave unit 2				-	3	0
	-	31	Defective discharge pipe 2 thermistor: Short – Slave unit 2				-	3	1
J3	-	47	Defective compressor surface thermistor: Open – Master unit		J	3	-	4	7
	-	48	Defective compressor surface thermistor: Short – Master unit				-	4	8
	-	49	Defective compressor surface thermistor: Open – Slave unit 1				-	4	9
	-	50	Defective compressor surface thermistor: Short – Slave unit 1				-	5	0
	-	51	Defective compressor surface thermistor: Open – Slave unit 2				-	5	1
	-	52	Defective compressor surface thermistor: Short – Slave unit 2				-	5	2
J3	-	56	Discharge pipe warning – Master unit		J	3	-	5	6
	-	57	Discharge pipe warning – Slave unit 1				-	5	7
	-	58	Discharge pipe warning – Slave unit 2				-	5	8
J5	-	1	Defective accumulator inlet thermistor – Master unit		J	5	-	0	1
	-	3	Defective accumulator inlet thermistor – Slave unit 1				-	0	3
	-	5	Defective accumulator inlet thermistor – Slave unit 2				-	0	5
	-	15	Error detection of accumulator inlet thermistor – Master unit				-	1	5
	-	16	Error detection of accumulator inlet thermistor – Slave unit 1				-	1	6
	-	17	Error detection of accumulator inlet thermistor – Slave unit 2				-	1	7
J6	-	1	Defective heat exchanger thermistor – Master unit		J	6	-	0	1
	-	2	Defective heat exchanger thermistor – Slave unit 1				-	0	2
	-	3	Defective heat exchanger thermistor – Slave unit 2				-	0	3
J7	-	6	Defective subcooling liquid pipe thermistor (R5T) – Master unit		J	7	-	0	6
	-	7	Defective subcooling liquid pipe thermistor (R5T) – Slave unit 1				-	0	7
	-	8	Defective subcooling liquid pipe thermistor (R5T) – Slave unit 2				-	0	8

Error code			Description of error	Upper code			Lower code		
				SEG 1	SEG 2	SEG 3	SEG 1	SEG 2	SEG 3
J8	-	1	Defective heat exchanger liquid pipe thermistor (R4T) – Master unit		J	8	-	0	1
	-	2	Defective heat exchanger liquid pipe thermistor (R4T) – Slave unit 1				-	0	2
	-	3	Defective heat exchanger liquid pipe thermistor (R4T) – Slave unit 2				-	0	3
J9	-	1	Defective sub-cool heat exchanger outlet thermistor – Master unit		J	9	-	0	1
	-	2	Defective sub-cool heat exchanger outlet thermistor – Slave unit 1				-	0	2
	-	3	Defective sub-cool heat exchanger outlet thermistor – Slave unit 2				-	0	3
	-	8	Error detection - Failure of sub-cool heat exchanger outlet thermistor – Master unit				-	0	8
	-	9	Error detection - Failure of sub-cool heat exchanger outlet thermistor – Slave unit 1				-	0	9
	-	10	Error detection - Failure of sub-cool heat exchanger outlet thermistor – Slave unit 2				-	1	0
JA	-	6	Defective high pressure sensor: Open – Master unit		J	A	-	0	6
	-	7	Defective high pressure sensor: Short – Master unit				-	0	7
	-	8	Defective high pressure sensor: Open – Slave unit 1				-	0	8
	-	9	Defective high pressure sensor: Short – Slave unit 1				-	0	9
	-	10	Defective high pressure sensor: Open – Slave unit 2				-	1	0
	-	11	Defective high pressure sensor: Short – Slave unit 2				-	1	1
JC	-	6	Defective low pressure sensor: Open – Master unit		J	C	-	0	6
	-	7	Defective low pressure sensor: Short – Master unit				-	0	7
	-	8	Defective low pressure sensor: Open – Slave unit 1				-	0	8
	-	9	Defective low pressure sensor: Short – Slave unit 1				-	0	9
	-	10	Defective low pressure sensor: Open – Slave unit 2				-	1	0
	-	11	Defective low pressure sensor: Short – Slave unit 2				-	1	1
L1	-	1	Instantaneous overcurrent - Inverter compressor 1 – Master unit		L	1	-	0	1
	-	2	Defective current sensor - Inverter compressor 1 – Master unit				-	0	2
	-	3	Current offset - Inverter compressor 1 – Master unit				-	0	3
	-	4	Failure power transistors - Inverter compressor 1 – Master unit				-	0	4
	-	5	Jumper settings Inverter - Inverter compressor 1 – Master unit				-	0	5
	-	17	Instantaneous overcurrent - Inverter compressor 2 – Master unit				-	1	7
	-	18	Defective current sensor - Inverter compressor 2 – Master unit				-	1	8
	-	19	Current offset - Inverter compressor 2 – Master unit				-	1	9
	-	20	Defective power transistors - Inverter compressor 2 – Master unit				-	2	0
	-	21	Jumper settings Inverter - Inverter compressor 2 – Master unit				-	2	1
	-	28	Defective inverter fan motor 1 - Master unit – ROM				-	2	8
	-	29	Defective inverter fan motor 2 - Master unit – ROM				-	2	9
	-	36	Defective inverter compressor 1 - Master unit – ROM				-	3	6
	-	37	Defective inverter compressor 2 - Master unit – ROM				-	3	7
	-	47	Power supply inverter compressor 1 error – Master unit				-	4	7
	-	48	Power supply inverter compressor 2 error – Master unit				-	4	8

Error code			Description of error	Upper code			Lower code		
				SEG 1	SEG 2	SEG 3	SEG 1	SEG 2	SEG 3
L1	-	7	Instantaneous overcurrent - Inverter compressor 1 – Slave unit 1		L	1	-	0	7
	-	8	Defective current sensor - Inverter compressor 1 – Slave unit 1				-	0	8
	-	9	Current offset - Inverter compressor 1 – Slave unit 1				-	0	9
	-	10	Defective power transistors - Inverter compressor 1 – Slave unit 1				-	1	0
	-	15	Jumper settings inverter - Inverter compressor 1 – Slave unit 1				-	1	5
	-	22	Instantaneous overcurrent - Inverter compressor 2 – Slave unit 1				-	2	2
	-	23	Defective current sensor - Inverter compressor 2 – Slave unit 1				-	2	3
	-	24	Current offset - Inverter compressor 2 – Slave unit 1				-	2	4
	-	25	Defective power transistors - Inverter compressor 2 – Slave unit 1				-	2	5
	-	26	Jumper settings inverter - Inverter compressor 2 – Slave unit 1				-	2	6
	-	32	Defective inverter fan motor 1 ROM – Slave unit 1				-	3	2
	-	33	Defective inverter fan motor 2 ROM – Slave unit 1				-	3	3
	-	38	Defective inverter compressor 1 ROM – Slave unit 1				-	3	8
	-	39	Defective inverter compressor 2 ROM – Slave unit 1				-	3	9
	-	49	Power supply inverter compressor 1 error – Slave unit 1				-	4	9
	-	50	Power supply inverter compressor 2 error – Slave unit 1				-	5	0
L1	-	11	Instantaneous overcurrent - Inverter compressor 1 – Slave unit 2		L	1	-	1	1
	-	12	Defective current sensor - Inverter compressor 1 – Slave unit 2				-	1	2
	-	13	Current offset - Inverter compressor 1 – Slave unit 2				-	1	3
	-	14	Defective power transistors - Inverter compressor 1 – Slave unit 2				-	1	4
	-	16	Jumper settings inverter - Inverter compressor 1 – Slave unit 2				-	1	6
	-	34	Defective inverter fan motor 1 ROM – Slave unit 2				-	3	4
	-	35	Defective inverter fan motor 2 ROM – Slave unit 2				-	3	5
	-	40	Defective inverter compressor 1 ROM – Slave unit 2				-	4	0
	-	41	Defective inverter compressor 2 ROM – Slave unit 2				-	4	1
	-	42	Instantaneous overcurrent - Inverter compressor 2 – Slave unit 2				-	4	2
	-	43	Defective current sensor - Inverter compressor 2 – Slave unit 2				-	4	3
	-	44	Current offset - Inverter compressor 2 – Slave unit 2				-	4	4
	-	45	Defective power transistors - Inverter compressor 2 – Slave unit 2				-	4	5
	-	46	Jumper settings inverter - Inverter compressor 2 – Slave unit 2				-	4	6
	-	51	Power supply inverter compressor 1 error – Slave unit 2				-	5	1
	-	52	Power supply inverter compressor 2 error – Slave unit 2				-	5	2

Error code		Description of error	Upper code			Lower code		
			SEG 1	SEG 2	SEG 3	SEG 1	SEG 2	SEG 3
L2	- 1	Momentary power error – Master unit		L	2	-	0	1
	- 2	Momentary power error – Slave unit 1				-	0	2
	- 3	Momentary power error – Slave unit 2				-	0	3
	- 4	Power ON – Master unit				-	0	4
	- 5	Power ON – Slave unit 1				-	0	5
	- 6	Power ON – Slave unit 2				-	0	6
L4	- 1	Radiation fin temperature rise: INV. PCB 1 – Master		L	4	-	0	1
	- 2	Radiation fin temperature rise: INV. PCB 1 – Slave 1				-	0	2
	- 3	Radiation fin temperature rise: INV. PCB 1 – Slave 2				-	0	3
	- 9	Radiation fin temperature rise: INV. PCB 2 – Master				-	0	9
	- 10	Radiation fin temperature rise: INV. PCB 2 – Slave 1				-	1	0
	- 11	Radiation fin temperature rise: INV. PCB 2 – Slave 2				-	1	1
L5	- 3	Inverter compressor 1 momentary overcurrent (Master)		L	5	-	0	3
	- 5	Inverter compressor 1 momentary overcurrent (Slave 1)				-	0	5
	- 7	Inverter compressor 1 momentary overcurrent (Slave 2)				-	0	7
	- 14	Inverter compressor 2 momentary overcurrent (Master)				-	1	4
	- 15	Inverter compressor 2 momentary overcurrent (Slave 1)				-	1	5
	- 16	Inverter compressor 2 momentary overcurrent (Slave 2)				-	1	6
L8	- 3	Inverter compressor 1 overcurrent (Master)		L	8	-	0	3
	- 6	Inverter compressor 1 overcurrent (Slave 1)				-	0	6
	- 7	Inverter compressor 1 overcurrent (Slave 2)				-	0	7
	- 11	Inverter compressor 2 overcurrent (Master)				-	1	1
	- 12	Inverter compressor 2 overcurrent (Slave 1)				-	1	2
	- 13	Inverter compressor 2 overcurrent (Slave 2)				-	1	3
L9	- 1	Inverter compressor 1 startup error (Master)		L	9	-	0	1
	- 5	Inverter compressor 1 startup error (Slave 1)				-	0	5
	- 6	Inverter compressor 1 startup error (Slave 2)				-	0	6
	- 10	Inverter compressor 2 startup error (Master)				-	1	0
	- 11	Inverter compressor 2 startup error (Slave 1)				-	1	1
	- 12	Inverter compressor 2 startup error (Slave 2)				-	1	2

Error code			Description of error	Upper code			Lower code		
				SEG 1	SEG 2	SEG 3	SEG 1	SEG 2	SEG 3
LC	-	14	Transmission error [Between outdoor units, INV. 1] (Master)		L	C	-	1	4
	-	15	Transmission error [Between outdoor units, INV. 1] (Slave 1)				-	1	5
	-	16	Transmission error [Between outdoor units, INV. 1] (Slave 2)				-	1	6
	-	19	Transmission error [Between outdoor units, Fan 1] (Master)				-	1	9
	-	20	Transmission error [Between outdoor units, Fan 1] (Slave 1)				-	2	0
	-	21	Transmission error [Between outdoor units, Fan 1] (Slave 2)				-	2	1
	-	24	Transmission error [Between outdoor units, Fan 2] (Master)				-	2	4
	-	25	Transmission error [Between outdoor units, Fan 2] (Slave 1)				-	2	5
	-	26	Transmission error [Between outdoor units, Fan 2] (Slave 2)				-	2	6
	-	30	Transmission error [Between outdoor units, INV. 2] (Master)				-	3	0
	-	31	Transmission error [Between outdoor units, INV. 2] (Slave 1)				-	3	1
	-	32	Transmission error [Between outdoor units, INV. 2] (Slave 2)				-	3	2
	-	33	Transmission error [Between outdoor units, sub PCB] “EKBPHPCBT7” (Master) or set 2-52-2 without sub board				-	3	3
	-	34	Transmission error [Between outdoor units, sub PCB] “EKBPHPCBT7” (Slave 1) or set 2-52-2 without sub board				-	3	4
	-	35	Transmission error [Between outdoor units, sub PCB] “EKBPHPCBT7” (Slave 2) or set 2-52-2 without sub board				-	3	5
P1	-	1	Inverter 1 power supply unbalanced voltage (Master)		P	1	-	0	1
	-	2	Inverter 1 power supply unbalanced voltage (Slave 1)				-	0	2
	-	3	Inverter 1 power supply unbalanced voltage (Slave 2)				-	0	3
	-	7	Inverter 2 power supply unbalanced voltage (Master)				-	0	7
	-	8	Inverter 2 power supply unbalanced voltage (Slave 1)				-	0	8
	-	9	Inverter 2 power supply unbalanced voltage (Slave 2)				-	0	9
P3	-	1	Defective reactor thermistor 1 (Master: INV. PCB 1)		P	3	-	0	1
	-	2	Defective reactor thermistor 1 (Slave 1: INV. PCB 1)				-	0	2
	-	3	Defective reactor thermistor 1 (Slave 2: INV. PCB 1)				-	0	3
	-	4	Defective reactor thermistor 2 (Master: INV. PCB 1)				-	0	4
	-	5	Defective reactor thermistor 2 (Slave 1: INV. PCB 1)				-	0	5
	-	6	Defective reactor thermistor 2 (Slave 2: INV. PCB 1)				-	0	6
	-	7	Defective reactor thermistor 1 (Master: INV. PCB 2)				-	0	7
	-	8	Defective reactor thermistor 1 (Slave 1: INV. PCB 2)				-	0	8
	-	9	Defective reactor thermistor 1 (Slave 2: INV. PCB 2)				-	0	9
	-	10	Defective reactor thermistor 2 (Master: INV. PCB 2)				-	1	0
	-	11	Defective reactor thermistor 2 (Slave 1: INV. PCB 2)				-	1	1
	-	12	Defective reactor thermistor 2 (Slave 2: INV. PCB 2)				-	1	2

Error code			Description of error	Upper code			Lower code		
				SEG 1	SEG 2	SEG 3	SEG 1	SEG 2	SEG 3
P4	-	1	Defective Radiation fin thermistor (Master: INV. PCB 1)		P	4	-	0	1
	-	4	Defective Radiation fin thermistor (Slave 1: INV. PCB 1)				-	0	4
	-	5	Defective Radiation fin thermistor (Slave 2: INV. PCB 1)				-	0	5
	-	6	Defective Radiation fin thermistor (Master: INV. PCB 2)				-	0	6
	-	7	Defective Radiation fin thermistor (Slave 1: INV. PCB 2)				-	0	7
	-	8	Defective Radiation fin thermistor (Slave 2: INV. PCB 2)				-	0	8
PJ	-	4	Incorrect type of inverter PCB [INV.1] (Master)		P	J	-	0	4
	-	5	Incorrect type of inverter PCB [INV.1] (Slave 1)				-	0	5
	-	6	Incorrect type of inverter PCB [INV.1] (Slave 2)				-	0	6
	-	9	Incorrect type of inverter PCB [Fan 1] (Master)				-	0	9
	-	10	Incorrect type of inverter PCB [Fan 2] (Master)				-	1	0
	-	12	Incorrect type of inverter PCB [INV.2] (Master)				-	1	2
	-	13	Incorrect type of inverter PCB [INV.2] (Slave 1)				-	1	3
	-	14	Incorrect type of inverter PCB [INV.2] (Slave 2)				-	1	4
	-	15	Incorrect type of inverter PCB [Fan 1] (Slave 1)				-	1	5
	-	16	Incorrect type of inverter PCB [Fan 1] (Slave 2)				-	1	6
	-	17	Incorrect type of inverter PCB [Fan 2] (Slave 1)				-	1	7
	-	18	Incorrect type of inverter PCB [Fan 2] (Slave 2)				-	1	8
U0	-	5	Refrigerant shortage alarm		U	0	-	0	5
	-	6	Refrigerant shortage alarm				-	0	6
	-	8	Refrigerant shortage (Master)				-	0	8
	-	9	Refrigerant shortage (Slave 1)				-	0	9
	-	10	Refrigerant shortage (Slave 2)				-	1	0
U1	-	1	Reverse phase/open phase of power supply (Master)		U	1	-	0	1
	-	4	Reverse phase of power supply [when power ON] (Master)				-	0	4
	-	5	Reverse phase/open phase of power supply (Slave 1)				-	0	5
	-	6	Reverse phase of power supply [when power ON] (Slave 1)				-	0	6
	-	7	Reverse phase/open phase of power supply (Slave 2)				-	0	7
	-	8	Reverse phase of power supply [when power ON] (Slave 2)				-	0	8

Error code			Description of error	Upper code			Lower code		
				SEG 1	SEG 2	SEG 3	SEG 1	SEG 2	SEG 3
U2	-	1	Shortage of inverter 1 power supply voltage (Master)		U	2	-	0	1
	-	2	Open phase of inverter 1 power supply (Master)				-	0	2
	-	3	Defective capacitor in inverter 1 main circuit (Master)				-	0	3
	-	8	Shortage of inverter 1 power supply voltage (Slave 1)				-	0	8
	-	9	Open phase of inverter 1 power supply (Slave 1)				-	0	9
	-	10	Defective capacitor in inverter 1 main circuit (Slave 1)				-	1	0
	-	11	Shortage of inverter 1 power supply voltage (Slave 2)				-	1	1
	-	12	Open phase of inverter 1 power supply (Slave 2)				-	1	2
	-	13	Defective capacitor in inverter 1 main circuit (Slave 2)				-	1	3
	-	22	Shortage of inverter 2 power supply voltage (Master)				-	2	2
	-	23	Open phase of inverter 2 power supply (Master)				-	2	3
	-	24	Defective capacitor in inverter 2 main circuit (Master)				-	2	4
	-	25	Shortage of inverter 2 power supply voltage (Slave 1)				-	2	5
	-	26	Open phase of inverter 2 power supply (Slave 1)				-	2	6
	-	27	Defective capacitor in inverter 2 main circuit (Slave 1)				-	2	7
	-	28	Shortage of inverter 2 power supply voltage (Slave 2)				-	2	8
	-	29	Open phase of inverter 2 power supply (Slave 2)				-	2	9
	-	30	Defective capacitor in inverter 2 main circuit (Slave 2)				-	3	0
U3	-	2	Initial installation alarm / Test operation failed due to indoor unit error		U	3	-	0	2
	-	3	Test operation not conducted				-	0	3
	-	4	Abnormal end of test operation				-	0	4
	-	5	Premature end of test operation during initial transmission error – check indoor unit error U4 / U9				-	0	5
	-	6	Premature end of test operation during normal transmission error				-	0	6
	-	7	Premature end of test operation due to transmission error				-	0	7
	-	8	Premature end of test operation due to transmission error of all units				-	0	8
U4	-	1	Transmission error between indoor and outdoor units		U	4	-	0	1
	-	3	Transmission error between indoor unit and system: check indoor unit error				-	0	3
	-	15	Outdoor unable to start test operation because some indoor detects error				-	1	5
U7	-	1	Error when external control adaptor for outdoor unit is installed		U	7	-	0	1
	-	2	Alarm when external control adaptor for outdoor unit is installed				-	0	2
	-	3	Transmission error between master and slave 1 units				-	0	3
	-	4	Transmission error between master and slave 2 units				-	0	4
	-	5	Multi system error				-	0	5
	-	6	Error in address settings of slave 1 and 2				-	0	6
	-	7	Connection of four or more outdoor units in the same system				-	0	7
	-	11	Error in indoor unit connection capacity for test operation				-	1	1
U9	-	1	Other indoor units abnormality		U	9	-	0	1

Error code			Description of error	Upper code			Lower code		
				SEG 1	SEG 2	SEG 3	SEG 1	SEG 2	SEG 3
U8	-	17	Connection of excessive indoor units		U	8	-	1	7
	-	18	Connection of wrong models of indoor units				-	1	8
	-	20	Improper combination of outdoor units				-	2	0
	-	21	Connection error				-	2	1
	-	29	Branch selector BSVQ-P connected to heat pump system				-	2	9
	-	31	Multi-unit combination error				-	3	1
	-	38	Daikin Altherma indoor unit detected				-	3	8
	-	39	Other hydrobox type than HXY-A unit detected				-	3	9
	-	50	RA connected to BP units and HXY-A unit detected				-	5	0
	-	51	Only HXY-a unit(s) connected, minimum 50% DX indoor need				-	5	1
UF	-	1	Wrong wiring check error		U	F	-	0	1
	-	5	Defective stop valve for test operation				-	0	5
UH	-	1	Wiring error		U	H	-	0	1
UJ	-	1	Defective active filter (Master)		U	J	-	0	1
	-	2	Defective active filter (Slave 1)				-	0	2
	-	3	Defective active filter (Slave 2)				-	0	3

Caution Code			Description code	Upper code		
				SEG 1	SEG 2	SEG 3
	P	2	Auto charge more than 5 minutes “t03” blinking		P	2
		8	Auto charge abnormal end freeze up indoor		P	8
		E	Auto charge nearly terminated		P	E
		9	Auto charge normal terminated		P	9
E	-	1	Conditions not met to perform leak test	E	-	1
	-	2	Indoor air average below 10°C for leak test	E	-	2
	-	3	Outdoor air below 0°C for leak test	E	-	3
	-	4	Abnormal low pressure during leak test	E	-	4
	-	5	Some indoor not compatible for leak test	E	-	5

4.3.4 Description Field Settings (mode 2 = m2) on Outdoor Unit Control PCB

- m2-0: **Cool/heat zone** setting. When multiple heat-pump systems need to change over together between cooling and heating (example multiple systems serve to indoor units in landscape area), per zone the optional board DTA104A61/62 needs to be installed.
  - Recommended location is in one of the *VRV* indoor units belonging to the system that will be set as “Master cool/heat unit” (field setting 2-0-1).
  - The source to change over between cooling and heating can be as follows:
    - One of indoor units is chosen: outdoor board DIP switch DS1-1 “Off”, or
    - Optional cool/heat selector “KRC19-26A” and optional board “BRP2A81” is used.
  - Default value: 0 = “individual”**.** Each outdoor unit can select cool/heat operation by optional cool/heat selector if installed, or by defining master indoor unit.
  - Set 1: “Master unit”. This system will switch several systems between cooling/heating/fan-only.
  - Set 2: “Slave unit”. The system will receive the operation from a system set as “Master cool/heat” with same “Cool/heat address” (set 2-1) and DIP switch address on the optional board DTA104A61/62.

- m2-1: **Cool/heat unified address**: address for cool/heat unified operation.
  - When multiple heat pump systems need to change over together between cooling and heating (example multiple systems serve indoor units in landscape area). Per zone the optional board DTA104A61/62 needs to be installed. Recommended location is in one of the *VRV* indoor units belonging to the system that will be set as “Master cool/heat unit” (field setting 2-0-1).
  - The address set to the multiple systems need to operate as a zone, should be same as the address set by the DIP switches on the related optional board DTA104A61/62.

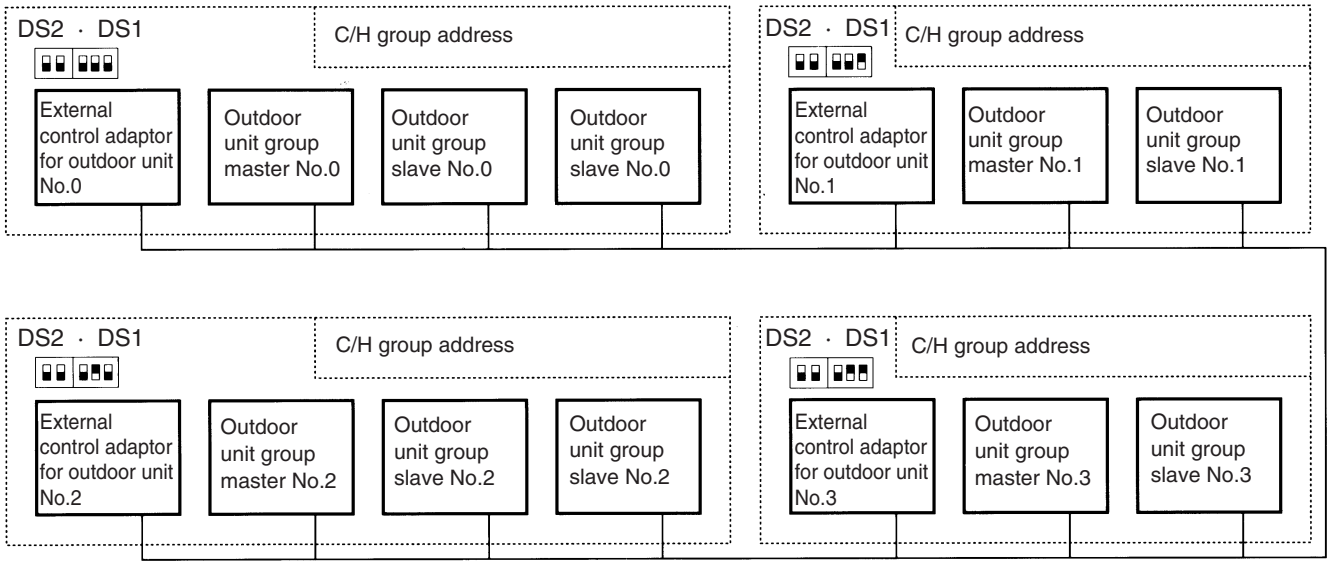

  - Default value = 0.
  - Field setting: 1-31.
  - The source for cool/heat selection can be:
    - Indoor unit: when outdoor unit DIP switch DS1-1 is at the “OFF” position.
    - Cool/heat switch: set DIP switch DS1-1 outdoor board to “ON”. Operation mode according to connections A-B-C to optional board “BRP2A81”.

- m2-2: **Low noise/demand address**: address for low noise/demand operation.
  - 1 or more systems (maximum 10 systems wired by “F1F2 OUT/D”) can operate use the LNO (Low Noise Operation) or/and the DE (Demand Control) by instruction of field supplied input to optional board DTA104A61/62.
  - To link the system to the corresponding DTA104A61/62, set the address same as the DIP switches position on the related optional board DTA104A61/62.
  - Ensure that also field setting 2-12-1 is set to enable input from optional board DTA104A61/62.

- m2-5: **Cross wiring check**.
  - Default value = 0. Not active.
  - Set 1: force all connected indoor units (except VKM) to operate the indoor fan on high speed. This setting can be made to check which units are missing in the communication if the number of indoor units do not correspond to the system lay out. Ensure that after cross wiring check was confirmed, to return setting to default 2-5-0. Once setting 2-5-1 is active, it is not automatically returning to default when exit mode 2.

- m2-6: **Forced thermostat ON** command all connected indoor units.
  - Default value = 0. Not active.
  - Set 1: force all connected indoor units to operate under “Test” = forced thermostat ON command to outdoor. Ensure that when the forced thermostat ON needs to be ended, to return setting to default 2-6-0. Once setting 2-6-1 is active, it is not automatically returning to default when exit mode 2.

- m2-8: **Te target** temperature for cooling operation. Change the setting 2-8 = 0, 2-7 in function of required operation method during cooling.
  - Default value = 2 = 6°C. The refrigerant temperature is set depending on the outdoor ambient conditions. As such adjusting the refrigerant temperature to match the required load (which is also related to the outdoor ambient conditions). When system is operating in cooling, less cooling load when low outdoor air temperatures (e.g. 25°C) as under higher outdoor air temperatures (35°C). The system automatically starts increasing its refrigerant temperature, so reducing the delivered capacity and increasing the system's efficiency.
  - Set 2: **Basic**. The refrigerant temperature is fixed to average indoor evaporating temperature of 6°C, independent from the situation. It corresponds to the standard operation which is known and can be expected from/under previous *VRV* systems.
  - Set 3-7: **High Sensible**. The refrigerant temperature is set higher/lower in cooling compared to basic operation. The focus under high sensible mode is comfort feeling for the customer. The selection method of indoor units is important and has to be considered as the available capacity is not the same as under basic operation. Activate this setting under cooling operation.

set 2-8-	Te target
0	Auto
2	6°C (default)
3	7°C
4	8°C
5	9°C
6	10°C
7	11°C

- m2-12: **Enable input “DTA104A61”**: enable the low noise function and/or power consumption limitation. If the system needs to be running under low noise operation or under power consumption limitation conditions when an external signal is sent to the unit, this setting should be changed. This setting will only be effective when the optional external control adaptor for outdoor unit (DTA104A61/62) is installed and the address set by DIP switches on DTA104A61/62 corresponds to the address set on the outdoor unit(s) – set 2-.
  - Default value = 0.
  - To enable input from DTA104A61/62 change to 2-12-1.

- m2-13: **AIRNET address**.
  - When an AIRNET system will be used, outdoor unit needs an AIRNET address.
  - Also to facilitate the recognition of a system in the map lay out of the service checker type III, set each system a unique address between 1 and 63.
  - When duplicating of AIRNET address, “UC” error code will appear on central control.

- m2-14: **Additional refrigerant charge** amount.
  - Once the manual or/and automatic refrigerant charge is completed, it is required to input to the outdoor unit the total additional refrigerant charge (per 5 kg R410A).

set 2-14-	+kg R410A
0	no input
1	0-5
2	5-10
3	10-15
4	15-20
5	20-25

set 2-14-	+kg R410A
6	25-30
7	30-35
8	35-40
9	40-45
10	45-50
11	50-55
12	55-60

set 2-14-	+kg R410A
13	60-65
14	65-70
15	70-75
16	75-80
17	80-85
18	85-90
19	90-95

  - If default set 0, the refrigerant containment check will not be available.
  - If no input, and field setting 2-88-0, at the end of the test operation caution “U3-02” will indicate that the refrigerant leak containment check will not be available.

- m2-20: **Manual refrigerant charge**. To add the refrigerant amount in a manual way (without automatic refrigerant charging functionality), following setting should be applied.
  - Default value = 0. Manual refrigerant charge is not performed.
  - Activate manual refrigerant charge: make setting 2-20 = 1. When the manual refrigerant charge is active, indication on outdoor refer to “Startup”.

- m2-21: **Refrigerant recovery / vacuuming**.
  - Default value = 0: recovery mode not active.
  - Set 1: outdoor and indoor electronic expansion valves are opened fully (except EV3 for PCM vessel). Compressor(s) do not operate.
    - All controllers show “Test” + LED operation-ON, but indoor and outdoor unit fan do not operate.
    - Outdoor segment display indicates t01.
    - By opening indoor and outdoor electronic expansion valves there is a free pathway to reclaim remaining refrigerant out by using a refrigerant recovery unit to a refrigerant recovery bottle.
    - Prior to launch the recovery mode, ensure:
      - To vacuum all lines between service hoses – refrigerant recovery unit and recovery bottle.
      - Weight the refrigerant recovery bottle to know recovered amount when refrigerant recovery function is terminated.
  - To end the refrigerant recovery mode: press once button BS3. The 7 segment display returns to normal (= all OFF).

- m2-22: **Selection automatic low night noise operation** level. The outdoor can switch automatically to a pre-set low night noise operation level during night time judgement.
  - Default value = 0: Auto low night noise operation not active.
  - Set 1: use level 1,
  - Set 2: use level 2,
  - Set 3: use level 3.
  - Set period: refer to set 2-26 for start time and 2-27 for end time.

- m2-25: **Low night noise operation level when using external input** to optional board DTA104A61/62.
  - If the system needs to be running under low noise operation conditions when an external signal is sent to the unit, this setting defines the level of low noise that will be applied.
  - This setting will only be effective when the optional external control adaptor for outdoor unit DTA104A61/62 is installed and the setting is enabled (mode 2-12-1).
  - When low night noise operation is actually performed, conditions if visible in mode 1 – code 1.
  - The low night noise operation will not be performed in one of following conditions:
    - Startup of system, or
    - During oil return, or
    - 30 minutes after external input opened, or
    - Capacity priority setting is active (refer to mode 2-29-1) and limit condition is met.
  - Default value = 2: level 2.
  - low night noise operation level can be selected to 1, 2 or 3 (field setting 2-25 – 1, 2, 3).

- m2-26: **Start time automatic low night noise** operation. When the auto-low night noise operation is active (refer to field setting 2-22) outdoor will start when start time is reached time is reached. The time judgement is taken from outdoor air tendency.

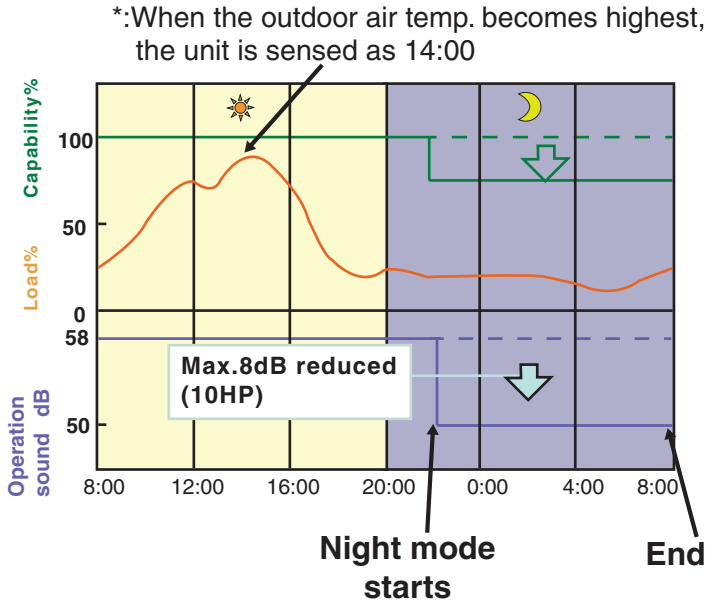

  - Default value = 2: 22h00.
  - Field setting 1 = 20h00, 3 = 24h00 (midnight).

- m2-27: **Stop time automatic low night noise** operation. When the auto-low night noise operation is active (refer to field setting 2-22) outdoor will stop the low night noise operation level automatically when stop time is reached.
  - Default value = 3: 8h00.
  - Field setting 1 = 6h00, 3 = 7h00.

- m2-28: **Power transistor check** mode. To evaluate the output of the power transistors. Use this function in case error code is displayed related to defective inverter PCB or inverter compressor is locked.
  - Default value = 0: power transistor check mode is not active.
  - Field setting 1: power transistor check mode is active.
    - Function:
      - Inverter PCB gives output of 10 Hz in sequence by all 6 transistors. Remove the U/V/W terminals of the inverter compressor, and connect to the inverter checker module. If all 6 LEDs blink, the transistors switch correctly.
      - When the power transistor check mode is interrupted, after internal power circuit is disconnected on the inverter PCB, 2 LEDs will light up to indicate discharge of the DC voltage. Wait till the LEDs are OFF before returning fasten terminals back to the compressor terminals.
    - Minimum requirements to refer to the result on the inverter checker module:
      - All 3 phases and neutral are available, and
      - Inverter PCB control is active. Check if the green LED “HAP” on the inverter PCBs are blinking normal (approx. 1/ second). If LEDs are OFF, need to exit the “standby mode” of the inverter:
        - Disconnect and reconnect power supply control PCB, or
        - Forced thermostat ON condition, or
          - Make shortly set 2-6-1 (forced thermostat ON indoor), or
          - 2-20-1 (manual refrigerant charge).
          - Once the LED is blinking on the inverter PCB, change related setting immediately back to set 0 to deactivate related function.
      - Diode module generates the required 500 VDC.
    - Cautions:
      - In case there is more than 1 compressor in a system (outdoor is 14 HP or larger, or multi outdoor configuration) all compressor inverter PCBs will perform the power transistor check. In such case, disconnect U/V/W fasten terminals on all compressors. Avoid accidental touch of fasten terminals to short circuit or earth leak to casing.
      - To stop the power transistor check mode, change setting to default 2-28-0.

- Output to U/V/W will also stop when control PCB decides standby mode of inverter circuit.
- Next time graph shows the different steps during the power transistor check mode.
  - Switching sequence during power transistor check mode:

Power transistor check mode RXYQ-T
disconnect fasten U/V/W from compressor!

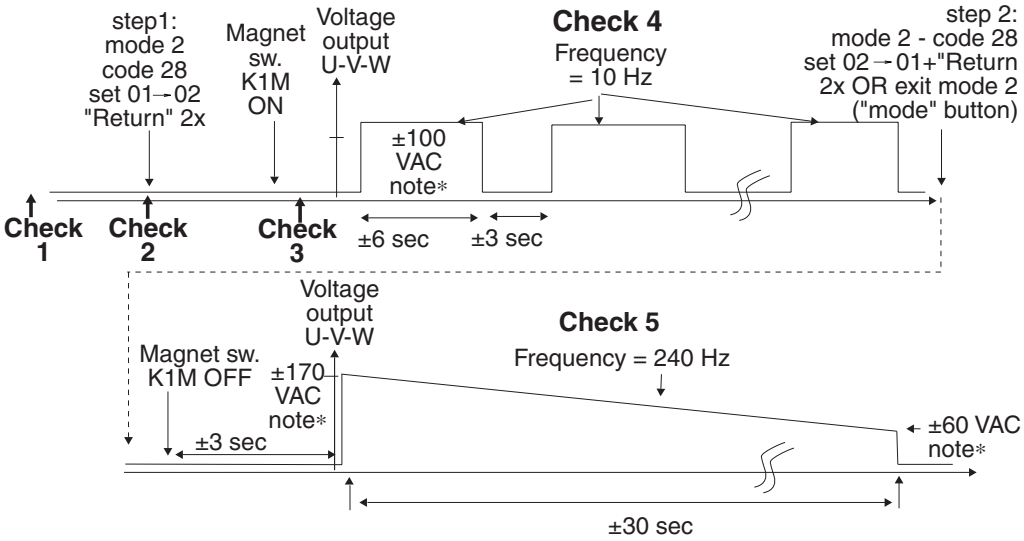

Check 1 : AC power input (connector X10A on A2P=inverter comp.) 380-415V unbalance max.2%.
Check 2 : relay "K1M" on inverter PCB switches : check DC voltage on P&N increase to ±500VDC.
Check 3 : DC = 1.42 x VAC power supply L1-L3 : check at connector X3A (8-12HP), or X5,6A (14-20HP).
Check 4 : AC UVW 10Hz intermediate : check difference within 10V (at fasten U/V/W)
Check 5 : AC UVW 240Hz continuous output while voltage drop (discharge capacitors DC) check difference between UVW within 10 V. 2 LEDs (V phase) brightness reduce till of.

*note : actual voltage value depends on meter characteristics

- m2-29: **Capacity priority**. When the low night noise operation is in use, performance of system might drop because airflow rate of outdoor unit is reduced.
  - Default value = 0: capacity priority cannot be used.
  - Field setting 1: capacity priority can temporary cancel the low night noise operation. Capacity priority can be initiated when certain operation parameters approach the safety setting:
    - Raise in high pressure during cooling.
    - Drop in low pressure during heating.
    - Raise of discharge pipe temperature.
    - Raise of inverter current.
    - Raise of fin temperature inverter PCB.

- When operation parameters return to normal range, the capacity priority is switched OFF, enable to reduce airflow rate depending on low night noise operation is still required (end time for low night noise operation is not reached or external input low night noise operation is still closed).

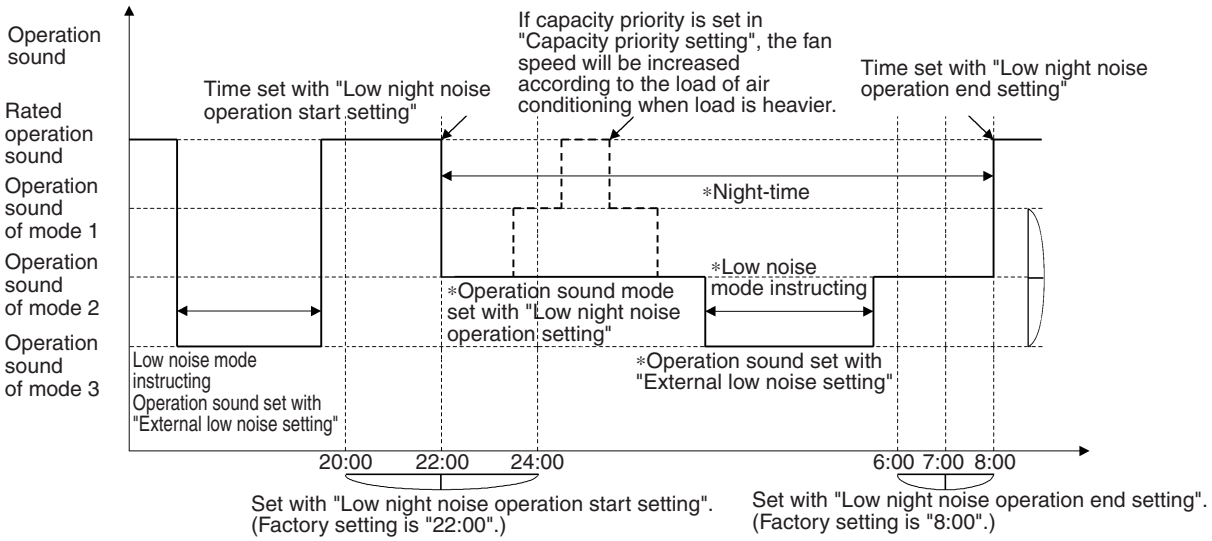

- m2-30: **Power consumption limitation level 1**. If the system needs to be running under power consumption limitation conditions via the external control adaptor for outdoor unit DTA104A61/62. This setting defines the level power consumption limitation that will be applied for level 1. The level is according the table.
  - Default = 3: 70%
  - Field setting:

set 2-30	current limit set %
1	60
2	65
3	70 (default)
4	75
5	80
6	85
7	90
8	95

- m2-31: **Power consumption limitation level 2**. If the system needs to be running under power consumption limitation conditions via the external control adaptor for outdoor unit DTA104A61/62. This setting defines the level power consumption limitation that will be applied for level 2. The level is according the table.
  - Default = 1: 40%
  - Field setting:

set 2-31	current limit set %
1	40 (default)
2	50
3	55

- m2-38: **Emergency operation "Master"**. To disable permanent compressor operation: in case of single module or "Master" unit of a multi outdoor system, this setting allows:
  - Default value = 0: compressor operation enabled.
  - Field setting:
    - Set 1: inverter 1 compressor is disabled.
    - Set 2: inverter 2 compressor is disabled. Only to make in case of 14-20 HP.
      Note that compressor 2 is left side located.
    - Set 3: all compressors in this master module are disabled permanent.

- m2-39: **Emergency operation "Slave 1"**. To disable permanent compressor operation of "Slave 1" unit of a multi outdoor system (RXYQ-T):
  - Default value = 0: compressor operation enabled.
  - Field setting:
    - Set 1: inverter 1 compressor is disabled.
    - Set 2: inverter 2 compressor is disabled. Only to make in case of 14-20 HP. Note that compressor 2 is left side located.
    - Set 3: all compressors in this master module are disabled permanent.

- m2-40: **Emergency operation "Slave 2"**. To disable permanent compressor operation of "Slave 2" unit of a multi outdoor system (RXYQ-T):
  - Default value = 0: compressor operation enabled.
  - Field setting:
    - Set 1: inverter 1 compressor is disabled.
    - Set 2: inverter 2 compressor is disabled. Only to make in case of 14-20 HP. Note that compressor 2 is left side located.
    - Set 3: all compressors in this master module are disabled permanent.

Combination table setting 2-38, 2-39 and 2-40:

disable	Master/ individual	Slave 1	Slave 2
compressor 1	2-38-1	2-39-1	2-40-1
compressor 2	2-38-2	2-39-2	2-40-2
module	2-38-3	2-39-3	2-40-3

- m2-51: **Master/Slave setting Multi**. When 2 or 3 modules are installed as a multi-outdoor (by common refrigerant piping and wiring by terminals Q1Q2) configuration is automatically detected. In certain cases, the sequence of the slave units need to be set manually (in case of AIRNET monitoring).
  - Default value = 0: Automatic detection.
  - Field setting: ensure that the modules in a multi are set different status. Even some modules in a multi are set manually to same status, U7 error will appear.
    - 1 = forced "Master" (F1F2/Ind terminals should be connected to indoor units).
    - 2 = forced "Slave 1" (only Q1Q2 terminals should be wired to "Master" module).
    - 3 = forced "Slave 2" (only Q1Q2 terminals should be wired to "Master" module).

- m2-81: **Cooling comfort** setting. The comfort level is related to the timing and the effort (power consumption) which is put in achieving a certain room temperature by changing temporally the refrigerant temperature to different values in order to achieve requested conditions more quickly.
  - Default value = 1: "Mild". Undershoot during cooling operation is allowed compared to the requested refrigerant temperature, in order to achieve the required room temperature very fast. The undershoot is not allowed from the startup moment. The startup occurs under the condition which is defined by the operation mode. In case of cooling operation the evaporating temperature is allowed to go down to 6°C on temporary base depending on the situation. When the request from the indoor units becomes more moderate, the system will eventually go to the steady state condition which is defined by the operation method above. The startup condition is different from the powerful and quick comfort setting.
  - Field setting:
    - 0 = "Eco". The original refrigerant temperature target, which is defined by the Te setting (field setting 2-8) in cooling mode, is kept without any correction, unless for protection control.
    - 2 = "Quick". Undershoot during cooling operation is allowed compared to the requested refrigerant temperature, in order to achieve the required room temperature very fast. The overshoot is allowed from the start up moment. In case of cooling operation the evaporating temperature is allowed to go down to 6°C on temporary base depending on the situation. When the request from the indoor units becomes more moderate, the system will eventually go to the steady state condition which is defined by the operation method above.
    - 3 = "Powerful". Undershoot during cooling operation is allowed compared to the requested refrigerant temperature, in order to achieve the required room temperature very fast. The overshoot is allowed from the start up moment. In case of cooling operation the evaporating temperature is allowed to go down to 3°C on temporary base depending on the situation. This setting is used in conjunction with setting [2-8].

- The graph below shows the different patterns of target Te according to setting 2-81 “cooling comfort setting”.

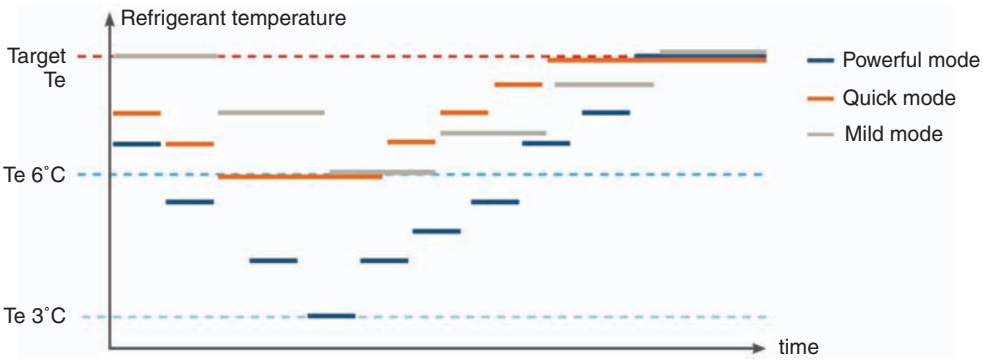

- m2-82: **Heating comfort** setting. The comfort level is related to the timing and the effort (power consumption) which is put in achieving a certain room temperature by changing temporally the refrigerant temperature to different values in order to achieve requested conditions more quickly.
  - Default value = 1: “Mild”. Overshooting during heating operation is allowed compared to the requested refrigerant temperature, in order to achieve the required room temperature very fast. The overshoot is not allowed from the startup moment. The startup occurs under the condition which is defined by the operation mode. In case of heating operation the condense temperature is allowed to go up to 46°C on temporary base depending on the situation. When the request from the indoor units becomes more moderate, the system will eventually go to the steady state condition which is defined by the operation method above. The startup condition is different from the powerful and quick comfort setting.
  - Field setting:
    - 0 = “Eco”. The original refrigerant temperature target, which is defined by the Tc setting (field setting 2-9) in heating mode, is kept without any correction, unless for protection control.
    - 2 = “Quick”. Overshoot during heating operation is allowed compared to the requested refrigerant temperature, in order to achieve the required room temperature very fast. The overshoot is allowed from the start up moment. In case of heating operation the condense temperature is allowed to go up to 46°C on temporary base depending on the situation. When the request from the indoor units becomes more moderate, the system will eventually go to the steady state condition which is defined by the operation method above.
    - 3 = “Powerful”. The overshoot is allowed from the start up moment. In case of heating operation the condense temperature is allowed to go up to 49°C on temporary base depending on the situation. This setting is used in conjunction with setting [2-9].

- m2-83: **Allocation of cool/heat master logic**. When system contains *VRV* DX indoor and RA indoor (through BP units), it is required to assign the cool/heat change over logic to follow.
  - Default value = 1: RA cool/heat master logic. Any RA indoor unit that is switched first, is assigned as cool/heat master as long this unit is in operation (regardless thermostat status). Only when this indoor unit is switched OFF operation (by remote controller), other indoor unit can become cool/heat master:
    - Priority is given to indoor unit operating in the same mode as the previous cool/heat master switched OFF operation.
    - Only no more indoor unit operate in the same mode as the previous cool/heat master, other RA indoor unit can become cool/heat master to switch to the other operation mode.
    - RA indoor unit that is operating, but demanding the other operation mode set by the cool/heat master, enters the “stand-by mode”: operation LED blinks.
    - *VRV* indoor unit change the operation mode immediately when outdoor unit receives change of operation mode from the current cool/heat master RA indoor unit.
  - Field Setting: 0 = *VRV* cool/heat master logic.
    - At time of first startup, or when cool/heat master was released, one of connected *VRV* DX indoor unit can be assigned cool/heat master. The symbol “locked cool/heat selector” blinks. In case of wireless controller kit is used, the green clock LED blinks on the receiver.
    - Confirm cool/heat master to a *VRV* DX indoor unit: press once the cool/heat selector button on the remote controller of the indoor unit to be set as cool/heat master.

- m2-84: **Initial opening electronic expansion valve BP** unit heating thermostat-ON:
  - Default value = 0: 400 pulses.
  - Field setting: 1 = 500 pulses, 2 = 600 pulses, 3 = 300 pulses.

- m2-85: **Automatic leak detection interval time**. *VRV* IV outdoor can perform on a preset interval a leak detection. It is required to activate the “automatic leak detection” by field setting 2-86.
  - Default value = 0: 365 days.
  - Field setting: 1-6.

Setting 2-85-	Days between automatic refrigerant leak detection
0	365 (default)
1	180
2	90
3	60
4	30
5	7
6	1

- m2-86: **Automatic leak detection activation**: the refrigerant leak detection judgement can be performed once in set days or every period set days. The interval is set by 2-85 (reference above). Each time when the automatic leak detection function was executed the system will stay idle until it is restarted by thermo. ON request or by next scheduled action.
  - Default value = 0.
  - Field setting:
    - 1 = once in set days.
    - 2 = every set days.

- m2-88: **Gathering detailed refrigerant information** during test run. To have the refrigerant leak function available, the *VRV* IV outdoor needs to run a prolonged test-run to calculate the total refrigerant charge and the related operation conditions at several target evaporating temperatures. The control uses following parameters: condensing temperature, evaporating temperature, discharge pipe temperature, frequency step, opening degree electronic expansion valves, indoor type and size, pipe length estimation during step 7 of test-run.
  - Default value = 0: detailed data collection enabled.
  - Field setting: 1 = test run without detailed data collection.

- m2-90: **Indoor unit without power** U4 error generation. In case an indoor unit needs maintenance or repair on the electric side, it is possible to keep the rest of the *VRV* DX indoor units operating without power supply to some indoor unit(s).
  - Default value = 0: not active.
  - Field setting: 1 = possible for operate system when some indoor units are temporary without power supply. Following conditions need to fulfil:
    - Maximum equivalent piping length of the farthest indoor less than 120 m.
    - Index indoor units power simultaneously less than 30% of the nominal outdoor.
    - Total capacity is less than 30% of the nominal one of the outdoor unit.
    - Operation time is limited to 24 hours period.
    - It is recommended to shut down connected indoor units at the same floor.
    - Not possible to use service mode operation (e.g. recovery mode).
    - Backup operation has priority over this special feature.

5. Procedure and Outline

Follow the following procedure to conduct the initial test operation after installation.

5.1 Check Work Prior to Turn Power Supply ON

Check that the installation work for the indoor and outdoor units has been performed in accordance with the instructions in the Installation Manual.

Check the below items.
- Power wiring
- Control transmission wiring between units
- Earth wire
- Branch switch
- Earth leakage circuit breaker

⇩

○ Is the wiring performed as specified?
○ Are the branch switches and earth leakage circuit breakers wired correctly?
○ Is the designated wire used?
○ Is the wiring screw of wiring not loose?
○ Is the grounding work completed?
○ Is the insulation of the main power supply circuit deteriorated?
Use a 500V megger tester to measure the insulation. (∗1)
- Do not use a megger tester for other circuits than 400V or 200V circuit.

∗1: Measure to be taken against decreased insulation resistance in the compressor
If the compressor is left to stand for an extended period of time after the refrigerant charge with the stop valve open and the power supply OFF, the refrigerant may be mixed in the compressor, thus decreasing the insulation resistance.
Heat the compressor as shown on the right and then recheck the insulation.

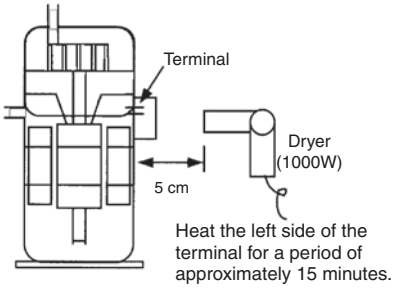

Check on refrigerant piping / insulation materials

⇩

○ Is the pipe size proper? Are the design pressures for the gas pipe and liquid pipe more than 4.0MPa?
○ Is the pipe insulation material installed securely?
Liquid and gas pipes need to be insulated. (Otherwise causes water leak.)

Check air tight test and vacuum drying.

⇩

○ Have the air tight test and the vacuum drying been conducted according to the procedure in the Installation Manual?

Check on amount of additional refrigerant charge

⇩

○ Is a proper quantity of refrigerant charged?
∗ Refer to the following page for the calculation of the amount of additionally refrigerant charge.
- When the refrigerant level is insufficient, leave the liquid and gas stop valves closed and charge with liquid refrigerant via the liquid stop valve service port. (∗ Do not charge via the gas stop valve service port. Doing so will result in error.)

○ Is the amount of additional refrigerant charge recorded in the [Service Precaution] label?

Check the stop valves for conditions.

○ Check to be sure the stop valves are under the following conditions.

Liquid side stop valve	Gas side stop valve
Open	Open

5.2 Turn Power ON

Turn outdoor unit and indoor unit power ON.

○ Be sure to turn the power ON 6 hours before starting operation to protect compressors. (to power ON crankcase heater)

Check the 7 segment display of the outdoor unit PCB.

○ Check to be sure the transmission is normal.
In a normal condition, the 7-segment display is OFF. Please refer to the following figure for other states.

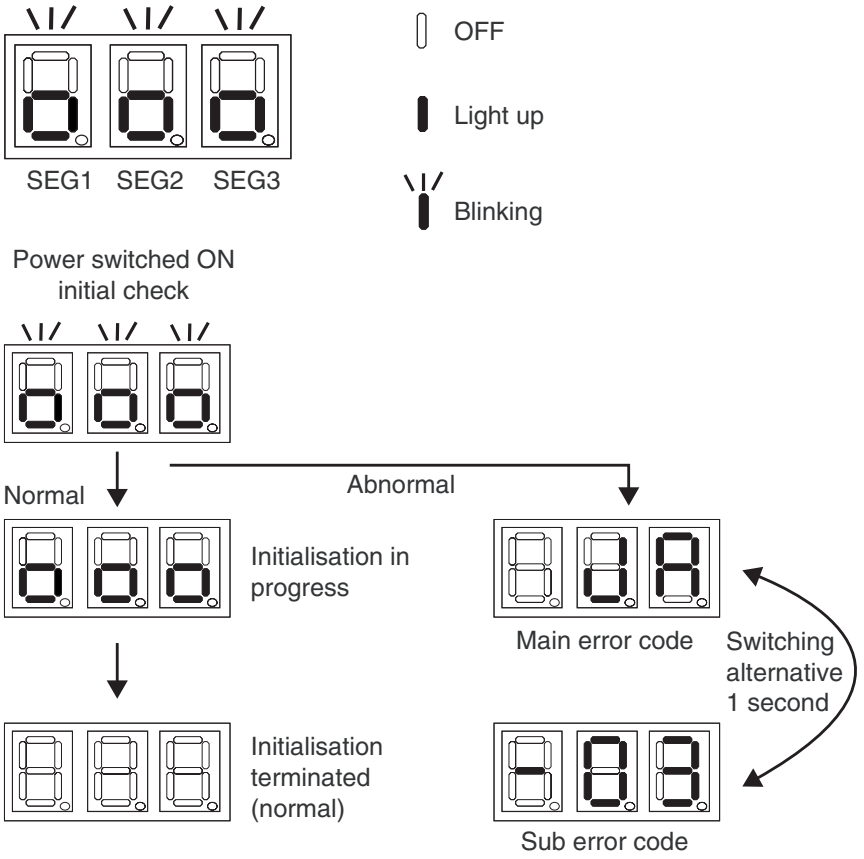

(*) The master unit is the outdoor unit to which the transmission wiring for the indoor units is connected.
The other outdoor units are slave units.

Make field settings with outdoor unit PCB.

○ Make field settings if needed.
(For the setting procedure, refer to information in "3. List of Field Setting Items" on P.90 onward.)
For the outdoor-multi system, make field settings with the master unit.
(Field settings made with the slave unit will be all invalid.)

Conduct check operations.

The check operations shown below will be automatically initiated.

- Check for erroneous wirings
- Check for failure to open stop valves
- Check for excessive refrigerant refilling
- Automatic judgement of piping length

Check for normal operation.

○ Before starting the normal operation after the completion of check operations, make sure indoor and outdoor units normally operate.

5.3 Charging Refrigerant

5.3.1 Precautions

Note:
- Refrigerant cannot be charged until field wiring has been completed.
- Refrigerant may only be charged after performing the air tight test and the vacuum drying.
- When charging a system, care shall be taken that its maximum permissible charge is never exceeded, in view of the danger of liquid hammer.
- Charging with an unsuitable substance may cause explosions and accidents, so always ensure that the appropriate refrigerant R410A is charged.
- Refrigerant containers shall be opened slowly.
- Always use protective gloves and protect your eyes when charging refrigerant.
- When the refrigerant system is to be opened, refrigerant must be treated according to the applicable legislation.

Warning **Electric Shock Warning**

- To avoid compressor breakdown. Do not charge the refrigerant more than the specified amount.
- This outdoor unit is factory charged with refrigerant and depending on pipe sizes and pipe lengths some systems require additional charging of refrigerant.
- In case additional refrigerant charging is required, refer to the nameplate of the unit. It states the type of refrigerant and necessary amount.

5.3.2 Calculating the Additional Refrigerant Charge

How to calculate the additional refrigerant to be charged

Additional refrigerant to be charged = R (kg). R should be rounded off in units of 0.1 kg.

$R = [(X_1 \times \phi\mathbf{22.2}) \times 0.37 + (X_2 \times \phi\mathbf{19.1}) \times 0.26 + (X_3 \times \phi\mathbf{15.9}) \times 0.18 + (X_4 \times \phi\mathbf{12.7}) \times 0.12 + (X_5 \times \phi\mathbf{9.5}) \times 0.059 + (X_6 \times \phi\mathbf{6.4}) \times 0.022\ ] + A + B$

$X_{1...6}$ = Total length (m) of liquid piping size at ϕ**a**

A parameter (kg)	Total indoor unit capacity CR[(a)]	HP			
		6-8	10-12	14-18	20
Piping length ≤ 30 m	50% ≤ CR ≤ 105%	0			0.5
	105% < CR ≤ 130%	0.5			1
Piping length > 30 m	50% ≤ CR ≤ 7 0%	0			0.5
	70% < CR ≤ 85%	0.3	0.5		1.0
	85% < CR ≤ 105%	0.7	1		1.5
	105% < CR ≤ 130%	1.2	1.5		2.0

(a) CR = Connection ratio.

Piping length is considered the distance from the outdoor unit to the farthest indoor unit.

When using metric piping, please take into account following table concerning the weight factor to be allocated. It should be substituted in the formula for R.

Inch piping	
size (ϕ) (mm)	Weight factor
f6.4 (1/4")	0.022
ϕ9.5 (3/8")	0.057
ϕ12.7 (1/2")	0.11
ϕ15.9 (5/8")	0.17
ϕ19.1 (3/4")	0.26
ϕ22.2 (7/8")	0.36

When selecting indoor unit, following table with connection ratio limitation has to be respected. More detailed information can be found in engineering data.

Used indoor units	Total capacity	Allowable capacity connection ratio	
	CR[(a)]	*VRV*	RA
VRV	50-130%	50-130%	—
VRV + RA	50-130%	0-130%	0-130%
RA	50-130%	—	50-130%

(a) Connection ratio.

5.3.3 Method for adding Refrigerant

■ Flow chart

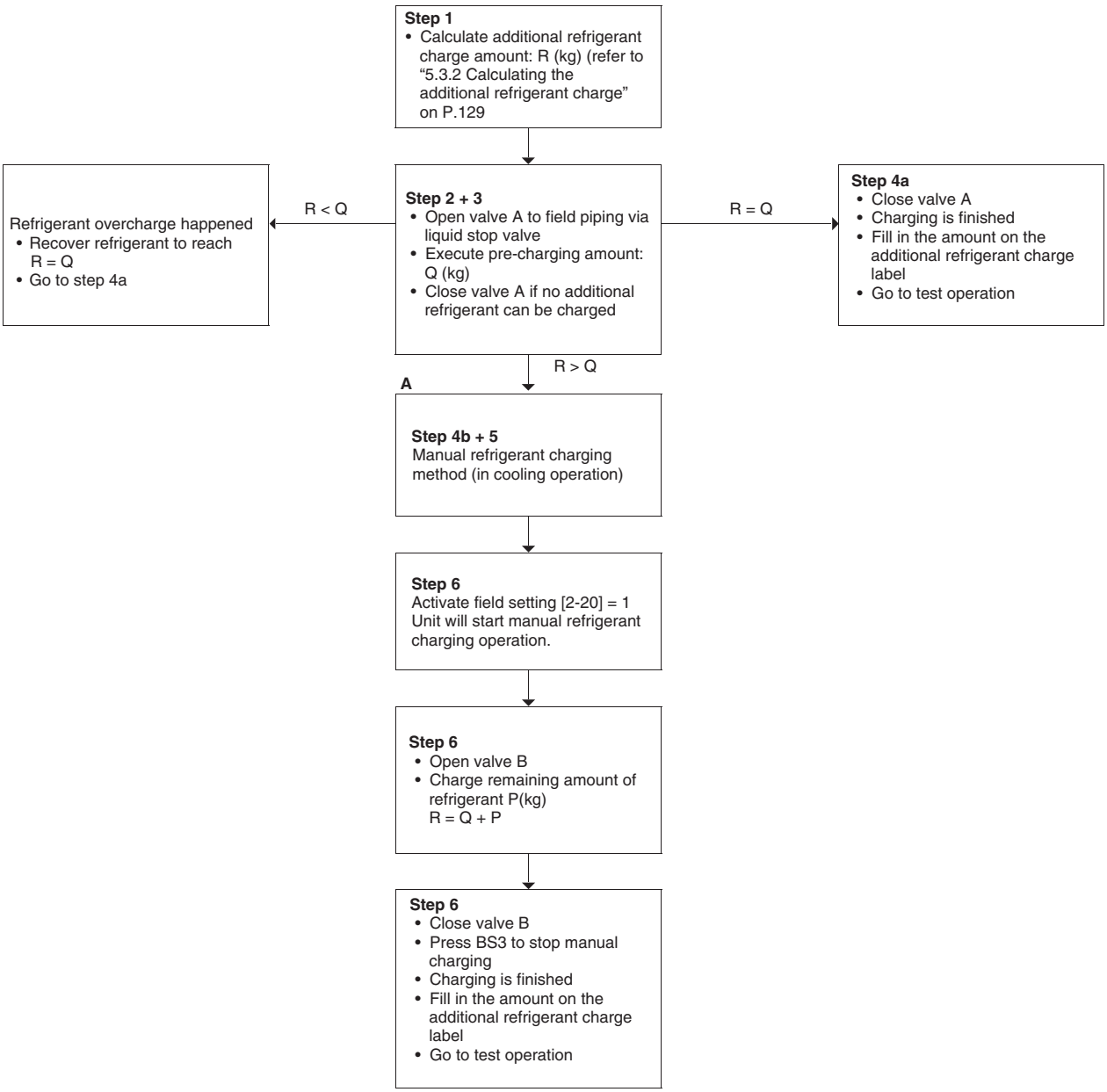

Be sure to charge the specified amount of refrigerant in liquid state. Since this refrigerant is a mixed refrigerant, adding it in gas form may cause the refrigerant composition to change, preventing normal operation.

- Before charging, check whether the refrigerant cylinder is equipped with a siphon tube or not.

Charge the liquid refrigerant with the cylinder in upright position.

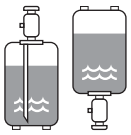

Charge the liquid refrigerant with the cylinder in upside-down position.

- Be sure to use tools exclusively for R410A to ensure required pressure resistance and to prevent foreign materials from mixing into the system.

Caution

- When the refrigerant charging procedure is done or when pausing, close the valve of the refrigerant tank immediately. If the tank is left with the valve open, the amount of refrigerant which is properly charged may get off point. More refrigerant may be charged by any remaining pressure after the unit has stopped.

Note:

- If the power of some units is turned OFF, the charging procedure cannot be finished properly.
- In case of a multiple outdoor system, turn ON the power of all outdoor units.
- Make sure to turn ON the power 6 hours before starting the operation. This is necessary to warm the crankcase by the electric heater.
- If operation is performed within 12 minutes after the indoor and outdoor units are turned ON, the compressor will not operate before the communication is established in a correct way between outdoor unit(s) and indoor units.
- Before starting charging procedures, check if the segment display indication of the outdoor unit PCB (A1P) is as normal (refer to "Retrieve Data by Using BS Button Outdoor Main Control PCB" on P.104). If an error code is present, refer to "2.3 Error Code and Description" on P.145.
- Make sure all connected indoor units are recognized
- Close the front panel before any refrigerant charge operation is executed. Without the front panel attached the unit cannot judge correctly whether it is operating properly or not.

Note:

In case of maintenance and the system (outdoor unit+field piping+indoor units) does not contain any refrigerant any more (e.g., after refrigerant reclaim operation), the unit has to be charged with its original amount of refrigerant (refer to the nameplate on the unit) by pre-charging before the automatic charging function can be started.

■ Charging method

As explained during vacuum drying method, once vacuum drying is finished, additional refrigerant charging can start.

Adding refrigerant by using the manual refrigerant charging function. Refer to "Adding refrigerant by using the manual charging function" on P.133. This method uses a manual method for charging refrigerant.

A flow chart is available which gives an overview of the possibilities and actions to be taken (refer to "■ Flow chart" on P.130).

To speed up the process of pre-charging refrigerant for large systems, it is recommended to first charge a portion of the refrigerant before performing charging. This step is included in the following procedure. This step can be skipped, charging will take longer in such a case.
Follow the steps as described in the following and take into account whether you want to use the automatic charge function or not.

1. Calculate the additional amount of refrigerant to be added using the formula mentioned in "5.3.2 Calculating the Additional Refrigerant Charge" on P.129.
2. The first 10 kg of additional refrigerant can be charged without outdoor unit operation.
   If the additional refrigerant amount is smaller than 10 kg, perform the pre-charging procedure as explained in the following step 3 and 4a.
   If the additional refrigerant charge is larger than 10 kg, perform step 3 till the end of the procedure.

3. Pre-charging can be done without compressor running by connecting the refrigerant bottle only to the liquid stop valve service port (open valve A). Make sure that the stop valves are closed (valve B+liquid line stop valve+gas line stop valve

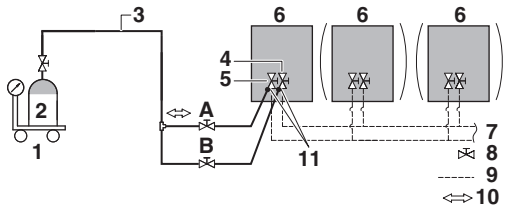

1 Measuring instrument
2 Refrigerant R410A tank (siphon system)
3 Charge hose
4 Gas line stop valve
5 Liquid line stop valve
6 Outdoor unit
7 To indoor unit
8 Stop valve
9 Field piping
10 Gas flow
11 Stop valve service port
A Valve A
B Valve B

4. a) If the calculated additional refrigerant amount is reached by above pre-charging procedure, close valve A.
   b) If the total amount of refrigerant could not be charged by pre-charging, then close valve A and go to step 5. Follow step 6 depending on the chosen charging method.

INFORMATION
If the total additional refrigerant amount was reached in step 4 (by pre-charging only), record the amount of refrigerant that was added on the additional refrigerant charge label provided with the unit and attach it on the back side of the front panel.
Perform the test procedure as described in "1. Test Operation" on P.72.

5. After pre-charging, perform the refrigerant charge operation as shown in the following and charge the remaining refrigerant of the additional charging amount through valve B. Open the liquid and gas side stop valves. Valves A and B must remain closed!

INFORMATION
For a multi outdoor unit system, it is not required to connect all charge ports to a refrigerant tank.
The refrigerant will be charged with ±22 kg in 1 hour time at an outdoor air temperature of 30°C DB or with ±6 kg at an outdoor air temperature of 0°C DB.
If you need to speed up in case of a multiple outdoor system, connect the refrigerant tanks to each outdoor unit.

Note:
- The unit's internal piping is already factory charged with refrigerant, so be careful when connecting the charge hose.
- After adding the refrigerant, do not forget to close the lid of the refrigerant charging port. The tightening torque for the lid is 11.5 to 13.9 N·m.
- In order to ensure uniform refrigerant distribution, it may take the compressor ±10 minutes to start up after the unit has started operation. This is not an error.

Adding refrigerant by using the manual charging function

6. The remaining additional refrigerant charge can be charged by operating the outdoor unit by means of the manual refrigerant charge operation mode:
   - Turn ON the power of the indoor units and outdoor unit.
   - Take all the precautions mentioned in "startup and configuration" into account.
   - Activate outdoor unit setting [2-20]=1 to start manual refrigerant charge mode.
     Result: The unit will start operation. Valve B can be opened. Charging of remaining additional refrigerant can be done. When the remaining calculated additional refrigerant amount is added, close valve B and press BS3 to stop the manual refrigerant charging procedure.

INFORMATION

- The manual refrigerant charge operation will automatically stop within 30 minutes. If charging is not completed after 30 minutes, perform the additional refrigerant charging operation again.
- When an error is detected during the procedure (e.g., in case of closed stop valve), an error code will be displayed. In that case, refer to"2.3 Error Code and Description" on P.145 and solve the error accordingly. Resetting the error can be done by pushing BS3. The procedure can be restarted from 6B).
- Aborting the manual refrigerant charge is possible by pushing BS3. The unit will stop and return to idle condition.

■ Checks after adding refrigerant

- Are the stop valves for liquid and gas open?
- Is the amount of refrigerant, that has been added, recorded on the refrigerant charge label?

Note:
Make sure to open all stop valves after (pre-) charging the refrigerant.
Operating with the stop valves closed will damage the compressor.

Part 6
Service Diagnosis

1. Symptom-based Troubleshooting 136
2. Troubleshooting by Remote Controller 139
   2.1 Mode Access Operation 139
   2.2 Procedure of Self-diagnosis by Remote Controller 141
   2.3 Error Code and Description 145
   2.4 Error Codes - Sub Codes 146
3. Troubleshooting by Indication on the Remote Controller 147
   3.1 PCB Abnormality 147
   3.2 Detection of Earth Leakage by Leak Detection PCB Assy 148
   3.3 Missing of Earth Leakage Detection Core 149
   3.4 Actuation of High Pressure Switch 150
   3.5 Actuation of Low Pressure Sensor 152
   3.6 INV. Compressor Motor Lock 154
   3.7 Compressor Damage Alarm 156
   3.8 Outdoor Unit Fan Motor Abnormality 158
   3.9 Electronic Expansion Valve Coil Abnormality 161
   3.10 Discharge Pipe Temperature Abnormality 162
   3.11 Wet Alarm 164
   3.12 Refrigerant Overcharged 165
   3.13 Harness Abnormality (between Control PCB and Inverter PCB) 166
   3.14 Outdoor Unit Fan Motor Signal Abnormality 167
   3.15 Thermistor Abnormality 169
   3.16 High Pressure Sensor Abnormality 171
   3.17 Low Pressure Sensor Abnormality 172
   3.18 Inverter PCB Abnormality 173
   3.19 Reactor Temperature Rise Abnormality 175
   3.20 Inverter Radiation Fin Temperature Rise Abnormality 176
   3.21 INV. Compressor Instantaneous Overcurrent 177
   3.22 INV. Compressor Overcurrent 179
   3.23 INV. Compressor Startup Abnormality 181
   3.24 Transmission Error between Inverter and Control PCB 184
   3.25 Power Supply Voltage Imbalance 186
   3.26 Reactor Temperature Abnormality 188
   3.27 Inverter Radiation Fin Temperature Abnormality 189
   3.28 Field Setting after Replacing Outdoor Unit Main PCB Abnormality or Combination of PCB Abnormality 190
   3.29 Refrigerant Shortage 191
   3.30 Reverse Phase, Open Phase 192
   3.31 Power Supply Insufficient or Instantaneous Abnormality 193
   3.32 Check Operation is not Executed 195
   3.33 Transmission Error between Indoor Units and Outdoor Units 196
   3.34 Transmission Error between Remote Controller and Indoor Unit 199
   3.35 Transmission Error between Outdoor Units 200
   3.36 Transmission Error between Main and Sub Remote Controllers 206

3.37 Transmission Error between Indoor and Outdoor Units in the Same System 207
3.38 Improper Combination of Indoor and Outdoor Units, Indoor Units and Remote Controller.....208
3.39 Address Duplication of Centralized Control Equipment 211
3.40 Transmission Error between Centralized Control Equipment and Indoor Unit.....212
3.41 System is not Set yet.....214
3.42 System Abnormality, Refrigerant System Address Undefined.....215
3.43 Check 217

1. Symptom-based Troubleshooting

No.	Symptom		Supposed Cause	Countermeasure
1	The system does not start operation at all.		Blowout of fuse(s)	Turn OFF the power supply and then replace the fuse(s).
	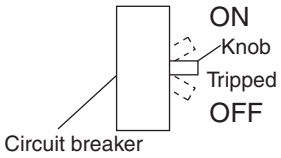		Cutout of breaker(s)	• If the knob of any breaker is in its OFF position, turn ON the power supply. • If the knob of any circuit breaker is in its tripped position, do not turn ON the power supply.
			Power failure	After the power failure is reset, restart the system.
2	The system starts operation but makes an immediate stop.		Blocked air inlet or outlet of indoor or outdoor unit	Remove obstacle(s).
			Clogged air filter(s)	Clean the air filter(s).
3	The system does not cool or heat air well.		Blocked air inlet or outlet of indoor or outdoor unit	Remove obstacle(s).
			Clogged air filter(s)	Clean the air filter(s).
			Enclosed outdoor unit(s)	Remove the enclosure.
			Improper set temperature	Set the temperature to a proper degree.
			Airflow rate set to "LOW"	Set it to a proper airflow rate.
			Improper direction of air diffusion	Set it to a proper direction.
			Open window(s) or door(s)	Shut it tightly.
		[In cooling]	Direct sunlight received	Hang curtains or shades on windows.
		[In cooling]	Too many persons staying in a room	The model must be selected to match the air conditioning load.
		[In cooling]	Too many heat sources (e.g. OA equipment) located in a room	
4	The system does not operate.	The system stops and immediately restarts operation.	If the OPERATION lamp on the remote controller turns ON, the system will be normal. These symptoms indicate that the system is controlled so as not to put unreasonable loads on the system.	Normal operation. The system will automatically start operation after a lapse of 5 minutes.
		Pressing the TEMP ADJUST button immediately resets the system.		
		The remote controller displays "UNDER CENTRALIZED CONTROL", which blinks for a period of several seconds when the OPERATION button is depressed.	The system is controlled with centralized control equipment. Blinking display indicates that the system cannot be operated using the remote controller.	Operate the system using the COOL/HEAT central remote controller.
		The system stops immediately after turning ON the power supply.	The system is in preparation mode of micro-computer operation.	Wait for a period of approximately 1 minute.
5	The system makes intermittent stops.	The remote controller displays error codes "U4" and "U5", and the system stops but restarts after a lapse of several minutes.	The system stops due to an interruption in communication between units caused by electrical noises coming from equipment other than air conditioners.	Remove causes of electrical noises. If these causes are removed, the system will automatically restart operation.
6	COOL-HEAT selection is disabled.	The remote controller displays "UNDER CENTRALIZED CONTROL".	This remote controller has no option to select cooling operation.	Use a remote controller with option to select cooling operation.
		The remote controller displays "UNDER CENTRALIZED CONTROL", and the COOL-HEAT selection remote controller is provided.	COOL-HEAT selection is made using the COOL-HEAT selection remote controller.	Use the COOL-HEAT selection remote controller to select cool or heat.
7	The system conducts fan operation but not cooling operation or heating operation.	This symptom occurs immediately after turning ON the power supply.	The system is in preparation mode of operation.	Wait for a period of approximately 10 minutes.

No.	Symptom		Supposed Cause	Countermeasure
8	The airflow rate is not reproduced according to the setting.	Even pressing the AIRFLOW RATE SET button makes no changes in the airflow rate.	In heating operation, when the room temperature reaches the set degree, the outdoor unit will stop while the indoor unit is brought to fan LL operation so that no one gets cold air. Furthermore, if fan operation mode is selected when other indoor unit is in heating operation, the system will be brought to fan LL operation. (The fan LL operation is also enabled while in oil return mode in cooling operation.)	Normal operation.
9	The airflow direction is not reproduced according to the setting.	The airflow direction is not corresponding to that displayed on the remote controller. The flap does not swing.	Automatic control	Normal operation.
10	A white mist comes out from the system.	<Indoor unit> In cooling, the ambient humidity is high. (This indoor unit is installed in a place with much oil or dust.)	Uneven temperature distribution due to heavy stain of the inside of the indoor unit.	Clean the inside of the indoor unit.
		<Indoor unit> Immediately after cooling operation stopping, the outdoor air temperature and ambient humidity are low.	Hot gas (refrigerant) flown in the indoor unit results to be vapor from the unit.	Normal operation.
		<Indoor and outdoor units> After the completion of defrosting operation, the system is switched to heating operation.	Defrosted moisture turns to be vapor and comes out from the units.	Normal operation.
11	The system produces sounds.	<Indoor unit> Immediately after turning ON the power supply, indoor unit produces "ringing" sounds.	These are operating sounds of the electronic expansion valve of the indoor unit.	Normal operation. This sound becomes low after a lapse of approximately 1 minute.
		<Indoor and outdoor units> "Hissing" sounds are continuously produced while in cooling or defrosting operation.	These sounds are produced from gas (refrigerant) flowing respectively through the indoor and outdoor units.	Normal operation.
		<Indoor and outdoor units> "Hissing" sounds are produced immediately after the startup or stop of the system, or the startup or stop of defrosting operation.	These sounds are produced when the gas (refrigerant) stops or changes flowing.	Normal operation.
		<Indoor unit> Faint sounds are continuously produced while in cooling operation or after stopping the operation.	These sounds are produced from the drain discharge device in operation.	Normal operation.
		<Indoor unit> "Creaking" sounds are produced while in heating operation or after stopping the operation.	These sounds are produced from resin parts expanding and contracting with temperature changes.	Normal operation.
		<Indoor unit> Sounds like "trickling" or the like are produced from indoor units in the stopped state.	On *VRV* systems, these sounds are produced when other indoor units in operation. The reason is that the system runs in order to prevent oil or refrigerant from dwelling.	Normal operation.
		<Outdoor unit> Pitch of operating sounds changes.	The reason is that the compressor changes the operating frequency.	Normal operation.
12	Dust comes out from the system.	Dust comes out from the system when it restarts after the stop for an extended period of time.	Dust, which has deposited on the inside of indoor unit, is blown out from the system.	Normal operation.

No.	Symptom		Supposed Cause	Countermeasure
13	Odors come out from the system.	In operation	Odors of room, cigarettes or else adsorbed to the inside of indoor unit are blown out.	The inside of the indoor unit should be cleaned.
14	Outdoor unit fan does not rotate.	In operation	The reason is that fan revolutions are controlled to put the operation to the optimum state.	Normal operation.
15	LCD display "88" appears on the remote controller.	Immediately after turning ON the power supply	The reason is that the system is checking to be sure the remote controller is normal.	Normal operation. This code is displayed for a period of approximately 1 minute at maximum.
16	The outdoor unit compressor or the outdoor unit fan does not stop.	After stopping operation	It stops in order to prevent oil or refrigerant from dwelling.	Normal operation. It stops after a lapse of approximately 5 to 10 minutes.
17	The outdoor gets hot.	While stopping operation	The reason is that the compressor is warmed up to provide smooth startup of the system.	Normal operation.
18	Hot air comes out from the system even though it stops.	Hot air is felt while the system stops.	On *VRV* systems, small quantity of refrigerant is fed to indoor units in the stopped state when other indoor units are in operation.	Normal operation.
19	The system does not cool air well.	The system is in dry operation.	The reason is that the dry operation serves not to reduce the room temperature where possible.	Change the system to cooling operation.

2. Troubleshooting by Remote Controller

2.1 Mode Access Operation

2.1.1 BRC1C62

The following modes can be selected by using the [INSPECTION/TEST Operation] button on the remote controller.

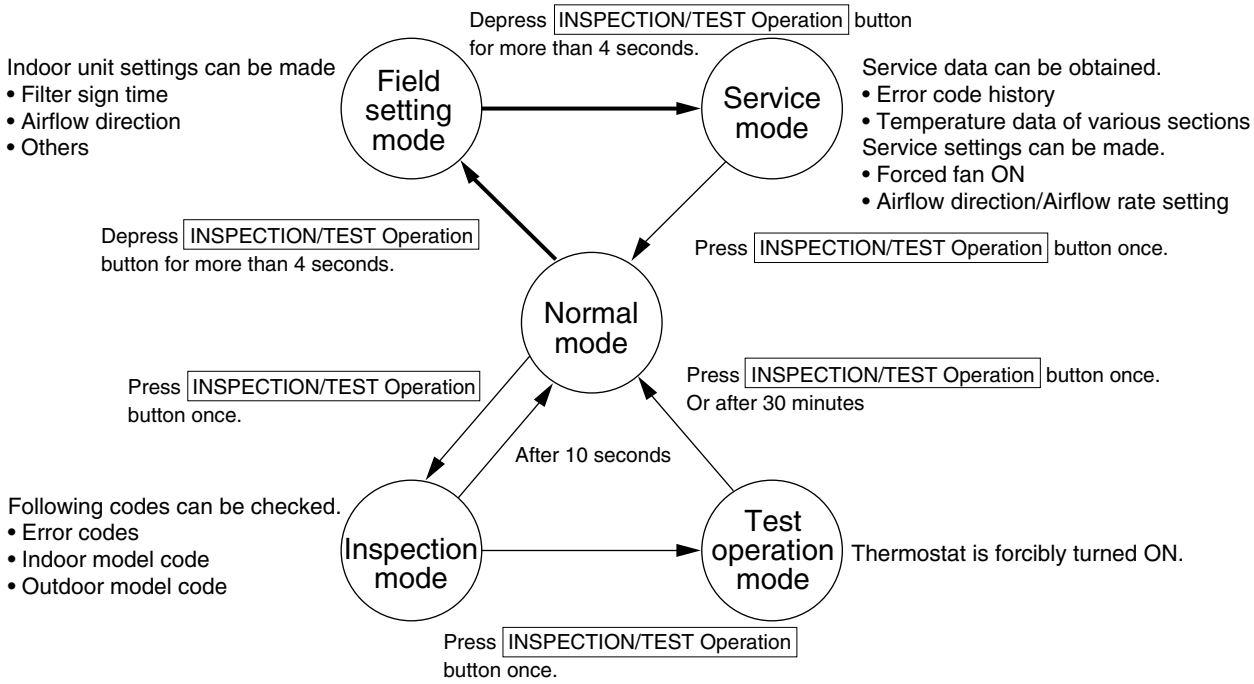

2.1.2 BRC1E62

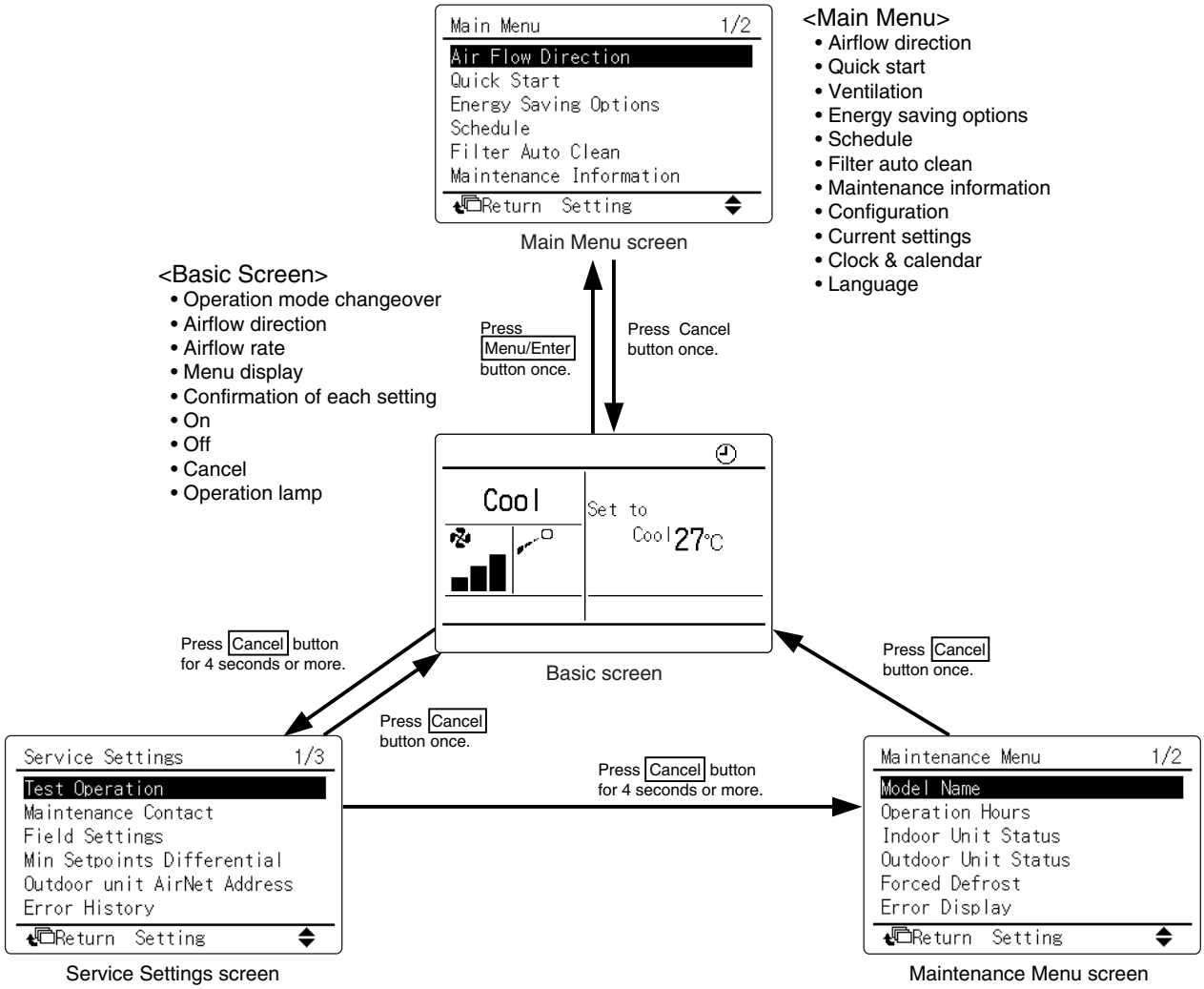

<Service Settings Menu>
- Test operation
- Maintenance Contract
- Field settings
- Min setpoints differential
- Group address
- Indoor unit Airnet address
- Outdoor unit Airnet address
- Error history
- Indoor unit status
- Outdoor unit status
- Forced fan ON
- Switch main sub controller
- Filter indicator

<Maintenance Menu>
- Model name
- Operation hours
- Indoor unit status
- Outdoor unit status
- Forced defrost
- Error display
- Swap unit No.
- Addressed sensor value

2.2 Procedure of Self-diagnosis by Remote Controller

2.2.1 Wired Remote Controller — BRC1C62

If operation stops due to error, the remote controller's operation LED blinks, and error code is displayed. (Even if stop operation is carried out, error contents are displayed when the inspection mode is entered.) The error code enables you to tell what kind of error caused operation to stop. Refer to P.145 for error code and error contents.

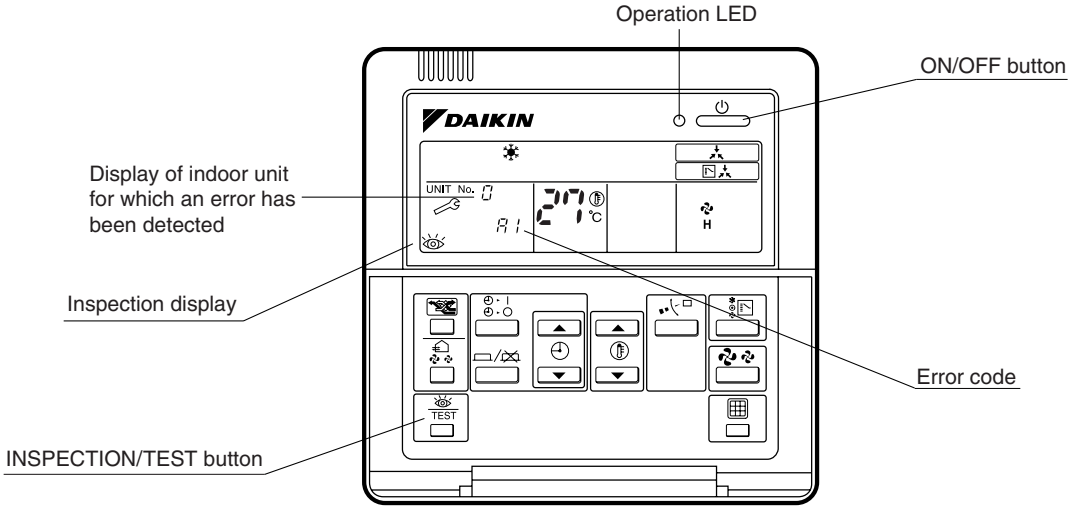

Note:

1. Pressing the INSPECTION/TEST button will blink the check indication.
2. While in service mode, holding down the ON/OFF button for a period of 5 seconds or more will clear the error history indication shown above. In this case, on the codes display, the error code will blink twice and then change to "00" (= Normal), the Unit No. will change to "0", and the operation mode will automatically switch from service mode to normal mode (displaying the set temperature).

2.2.2 Wired Remote Controller — BRC1E62

The following will be displayed on the screen when an error (or a warning) occurs during operation. Check the error code and take the corrective action specified for the particular model.

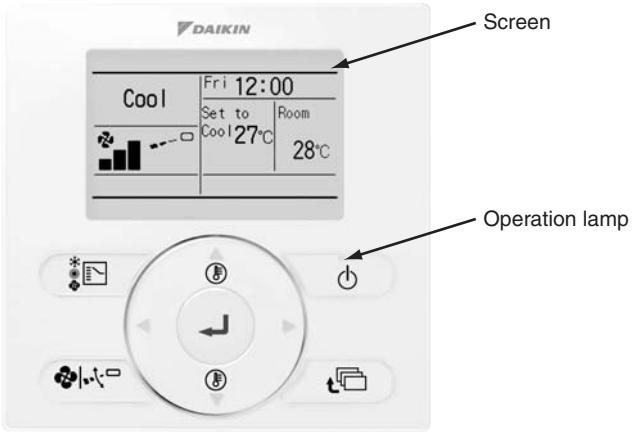

(1) Checking an error or warning

	Operation Status	Display	
Abnormal shutdown	The system stops operating.	The operation lamp (green) starts to blink. The message "Error: Push Menu button" will appear and blink at the bottom of the screen.	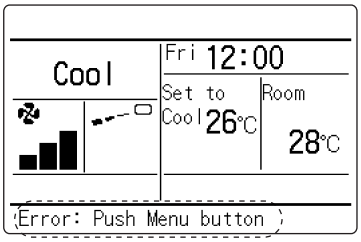
Warning	The system continues its operation.	The operation lamp (green) remains ON. The message "Warning: Push Menu button" will appear and blink at the bottom of the screen.	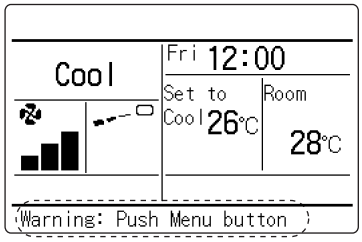

(2) Taking corrective action

· Press the Menu/Enter button to check the error code.

· Take the corrective action specific to the model.

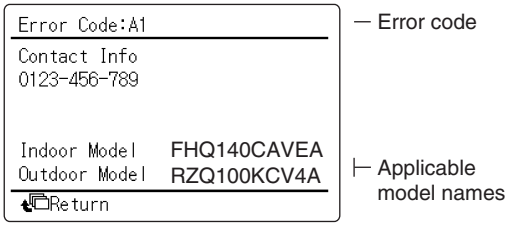

2.2.3 Wireless Remote Controller

If unit stops due to an error, the operation indicating LED on the signal receiving part of indoor unit blinks. The error code can be determined by following the procedure described below. (The error code is displayed when an operation error has occurred. In normal condition, the error code of the last problem is displayed.)

1	Press the INSPECTION/TEST button to select “inspection”. The equipment enters the inspection mode. The “Unit” indication is displayed and the Unit No. display shows blinking “0” indication.	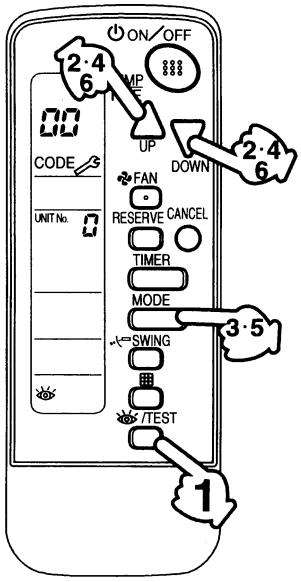
2	Set the Unit No. Press the UP or DOWN button and change the Unit No. display until the buzzer (∗1) is generated from the indoor unit. ∗1 Number of beeps **3 short beeps:** Conduct all of the following operations. **1 short beep:** Conduct steps 3 and 4. Continue the operation in step 4 until a buzzer remains ON. The continuous buzzer indicates that the error code is confirmed. **Continuous beep:** No abnormality.	
3	Press the MODE selector button. The left “0” (upper digit) indication of the error code blinks.	
4	Error code upper digit diagnosis Press the UP or DOWN button and change the error code upper digit until the error code matching buzzer (∗2) is generated. ■ The upper digit of the code changes as shown below when the UP and DOWN buttons are pressed. ⇨ **"UP" button** ⬅ **"DOWN" button** ∗2 Number of beeps **Continuous beep:** Both upper and lower digits matched. (Error code confirmed) **2 short beeps:** Upper digit matched. **1 short beep:** Lower digit matched.	
5	Press the MODE selector button. The right “0” (lower digit) indication of the error code blinks.	
6	Error code lower digit diagnosis Press the UP or DOWN button and change the error code lower digit until the continuous error code matching buzzer (∗2) is generated. ■ The lower digit of the code changes as shown below when the UP and DOWN buttons are pressed. ⇨ **"UP" button** ⬅ **"DOWN" button**	

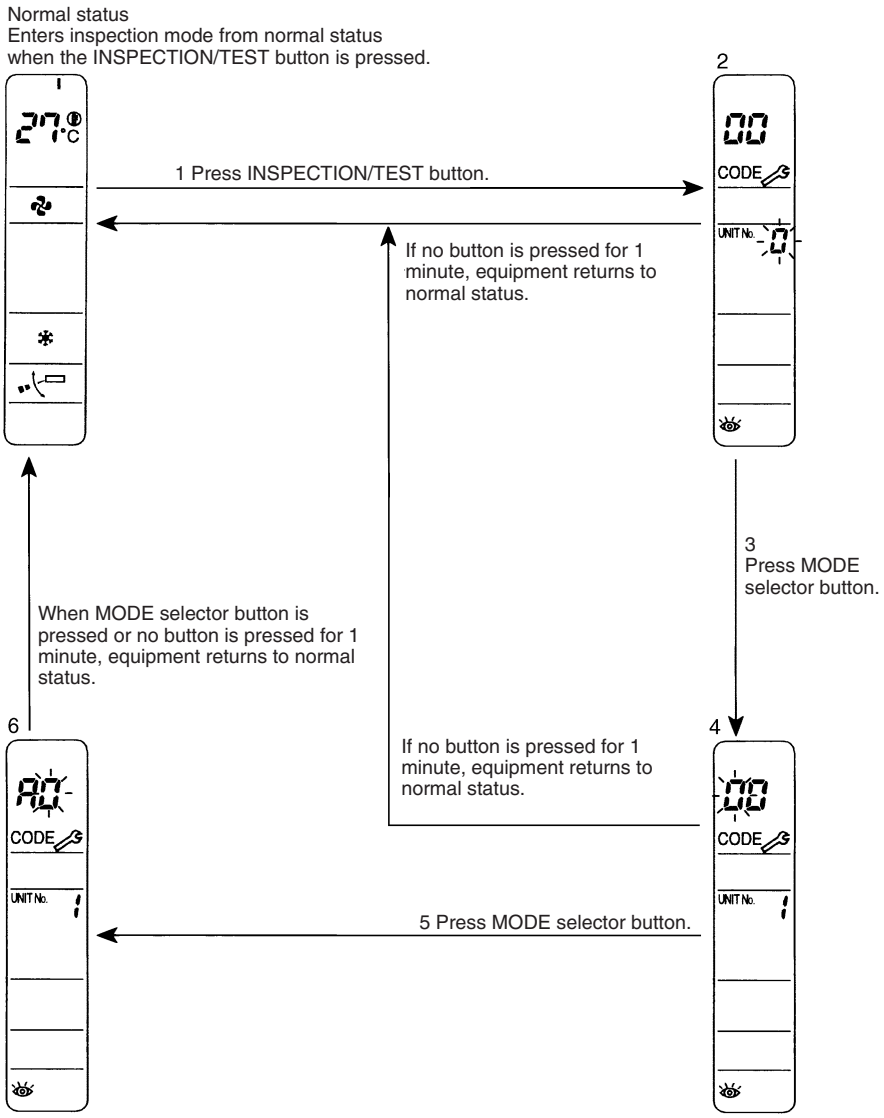
Normal status
Enters inspection mode from normal status when the INSPECTION/TEST button is pressed.
2
1 Press INSPECTION/TEST button.
If no button is pressed for 1 minute, equipment returns to normal status.
3
Press MODE selector button.
When MODE selector button is pressed or no button is pressed for 1 minute, equipment returns to normal status.
6
4
If no button is pressed for 1 minute, equipment returns to normal status.
5 Press MODE selector button.
CODE
UNIT No.

2.3 Error Code and Description

○: ON ●: OFF ◑: Blink

	Error code	Operation lamp	Error contents	Page Referred
Outdoor Unit	E1	◑	PCB abnormality	147
	E2	◑	Detection of earth leakage by leak detection PCB assy	148
	E2	◑	Missing of earth leakage detection core	149
	E3	◑	Actuation of high pressure switch	150
	E4	◑	Actuation of low pressure sensor	152
	E5	◑	INV. compressor motor lock	154
	E6	◑	Compressor damage alarm	156
	E7	◑	Outdoor unit fan motor abnormality	158
	E9	◑	Electronic expansion valve coil abnormality	161
	F3	◑	Discharge pipe temperature abnormality	162
	F4	◑	Wet alarm	164
	F6	◑	Refrigerant overcharged	165
	F6	◑	Harness abnormality (between control PCB and inverter PCB)	166
	H7	◑	Outdoor unit fan motor signal abnormality	167
	H9	◑	Outdoor air thermistor (R1T) abnormality	169
	J3	◑	Discharge pipe thermistor (R21T, R22T) abnormality Compressor surface temperature thermistor (R8T) abnormality	169
	J5	◑	Accumulator inlet thermistor (R3T) abnormality	169
	J6	◑	Heat exchanging deicer thermistor (R7T) abnormality	169
	J7	◑	Subcooling heat exchanger liquid pipe thermistor (R5T) abnormality	169
	J8	◑	Heat exchanger liquid pipe thermistor (R4T) abnormality	169
	J9	◑	Heat exchanger gas pipe thermistor (R6T) abnormality	169
	JA	◑	High pressure sensor abnormality	171
	JC	◑	Low pressure sensor abnormality	172
	L1	◑	Inverter PCB abnormality	173
	L3	◑	Reactor Temperature Rise Abnormality	175
	L4	◑	Inverter radiation fin temperature rise abnormality	176
	L5	◑	INV. compressor instantaneous overcurrent	177
	L8	◑	INV. compressor overcurrent	179
	L9	◑	INV. compressor startup abnormality	181
	LC	◑	Transmission error between inverter and control PCB	184
	P1	◑	Power supply voltage imbalance	186
	P3	◑	Reactor Temperature Abnormality	188
	P4	◑	Inverter radiation fin temperature abnormality	189
	PJ	◑	Field setting after replacing outdoor unit main PCB abnormality or combination of PCB abnormality	190
System	U0	○	Refrigerant shortage	191
	U1	◑	Reverse phase, open phase	192
	U2	◑	Power supply insufficient or instantaneous abnormality	193
	U3	◑	Check operation is not executed	195
	U4	◑	Transmission error between indoor units and outdoor units	196
	U5	◑	Transmission error between remote controller and indoor unit	199
	U7	◑	Transmission error between outdoor units	200
	U8	◑	Transmission error between main and sub remote controllers	206
	U9	◑	Transmission error between indoor and outdoor units in the same system	207
	UA	◑	Improper combination of indoor and outdoor units, indoor units and remote controller	208
	UC	○	Address duplication of centralized control equipment	211
	UE	◑	Transmission error between centralized control equipment and indoor unit	212
	UF	◑	System is not set yet	214
	UH	◑	System abnormality, refrigerant system address undefined	215

The system operates for error codes indicated in black squares, however, be sure to check and repair.

2.4 Error Codes - Sub Codes

If an error code like the one shown below is displayed when the navigation remote controller (BRC1E62) is in use, make a detailed diagnosis or a diagnosis of the relevant unit referring to the attached list of detailed error codes.

2.4.1 Indoor Unit

Error code	Troubleshooting	
	Description of error	Description of diagnosis
A6 - 01	Fan motor locked	A locked fan motor current has been detected. Turn the fan by hand to check for the connection of connectors.
A6 - 10	Fan overcurrent error	A fan motor overcurrent has been detected. Check for the connection of the connector between the fan motor and the PCB for the fan. If the connection is normal, replace the fan motor. If this still cannot solve the error, replace the PCB for the fan.
A6 - 11	Fan position detection error	An error in the detection of position of the fan motor. Check for the connection of the connector between the fan motor and the PCB for the fan. If the connection is normal, replace the fan motor. If this still cannot solve the error, replace the PCB for the fan.
A8 - 01	Power supply voltage error	Check for the input voltage of the fan motor.
A9 - 01	Electronic expansion valve error	There is an error in the electronic expansion valve coil or a connector disconnected.
A9 - 02	Refrigerant leakage detection error	Refrigerant leaks even if the electronic expansion valve is closed. Replace the electronic expansion valve.
AH - 03	Transmission error (between the self-cleaning decoration panel and the indoor unit) [when the self-cleaning decoration panel is mounted]	Check for the connection of the harness connector between the panel PCB and the indoor unit PCB.
AH - 04	Dust detection sensor error [when the self-cleaning decoration panel is mounted]	Check for the connections of the connector X12A on the panel PCB and the connectors X18A and X19A on the sensor PCB.
AH - 05	Dust collection sign error [when the self-cleaning decoration panel is mounted]	Check for clogging with dust at the dust collection port as well as in the brush unit, S-shaped pipe, and dust box. Furthermore, check for any stains of the light receiving and emitting parts of the infrared unit.
AH - 06	Air filter rotation error [when the self-cleaning decoration panel is mounted]	Check for anything getting in the way of rotating the filter (e.g. the filter comes off or the drive gear is clogged with foreign matters).
AH - 07	Damper rotation error [when the self-cleaning decoration panel is mounted]	The damper does not rotate normally. Check for any foreign matters around the damper and for the operation of the gear and limit switch.
AH - 08	Filter self-cleaning operation error [when the self-cleaning decoration panel is mounted]	The unit has not yet completed the filter self-cleaning operation even after the lapse of specified period of time. Check for any external noise, etc.
AH - 09	Filter self-cleaning operation start disabled error [when the self-cleaning decoration panel is mounted]	The unit has been put into a state in which the filter self-cleaning operation is disabled. Check the unit for the operating conditions.
AJ - 01	Capacity setting error	There is an error in the capacity setting of the indoor unit PCB.
AJ - 02	Electronic expansion valve setting error	There is a fault in the setting of the gear type electronic expansion valve/direct acting type electronic expansion valve.
C1 - 01	Transmission error (between indoor unit PCB and the PCB for the fan)	Check for the conditions of transmission between the indoor unit PCB and the PCB for the fan.
C6 - 01	Defective combination of indoor unit PCB and the PCB for the fan	A combination of indoor unit PCB and the PCB for the fan is defective. Check whether the capacity setting adaptor is correct and the type of the PCB for the fan is correct.
U4 - 01	Indoor-Outdoor transmission error	Refer to the "U4" flow chart.
UA - 13	Refrigerant type error	The type of refrigerant used for the indoor unit is different from that used for the outdoor unit.
UA - 15	Not applicable for self-cleaning decoration panel [when the self-cleaning decoration panel is mounted]	An outdoor unit is not applicable for the self-cleaning decoration panel is connected.

2.4.2 Outdoor Unit

Refer to P.108.

3. Troubleshooting by Indication on the Remote Controller

3.1 PCB Abnormality

Error Code	E1
Applicable Models	RXYQ-T
Method of Error Detection	Abnormality is detected under the communication conditions in the hardware section between the indoor unit and outdoor unit.
Error Decision Conditions	When the communication conditions in the hardware section between the indoor unit and the outdoor unit are not normal
Supposed Causes	■ Defective outdoor unit PCB (A1P) ■ Defective connection communication line between indoor and outdoor units

Troubleshooting

Caution Be sure to turn off the power switch before connecting or disconnecting connectors, or parts may be damaged.

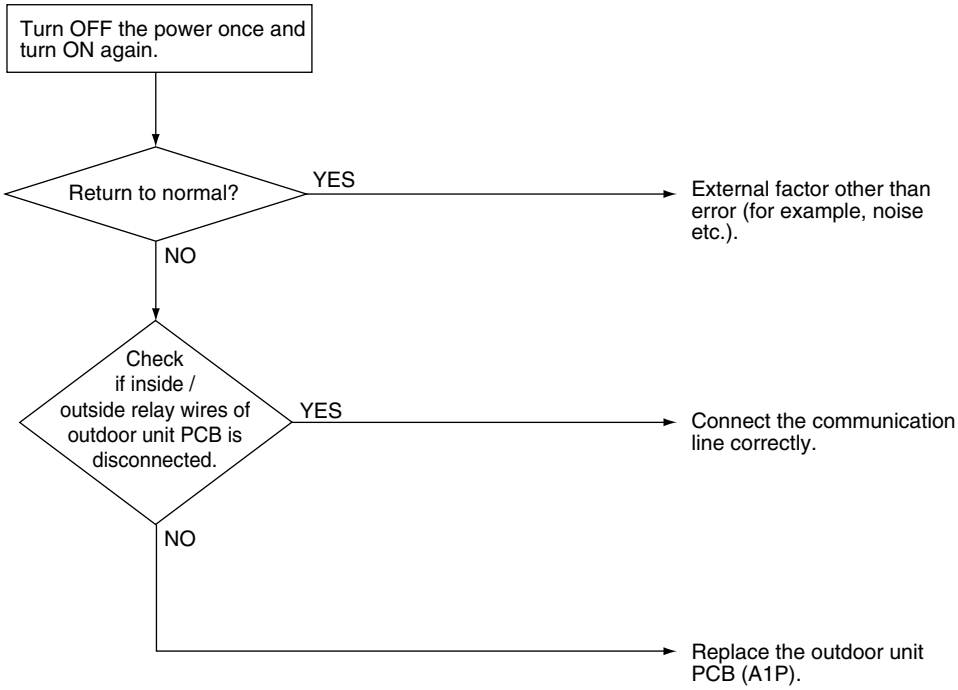

3.2 Detection of Earth Leakage by Leak Detection PCB Assy

Error Code

E2

Sub code: -01 to -03

Applicable Models

RXYQ-T

Method of Error Detection

Detect leakage current in the earth leakage detection circuit and detect error on the control PCB.

Error Decision Conditions

When leakage current is detected.

Supposed Causes

- Earth fault
- Improper wiring passing through the current sensor
- Temporary liquid compression or melting in compressor

Troubleshooting

Caution Be sure to turn off the power switch before connecting or disconnecting connectors, or parts may be damaged.

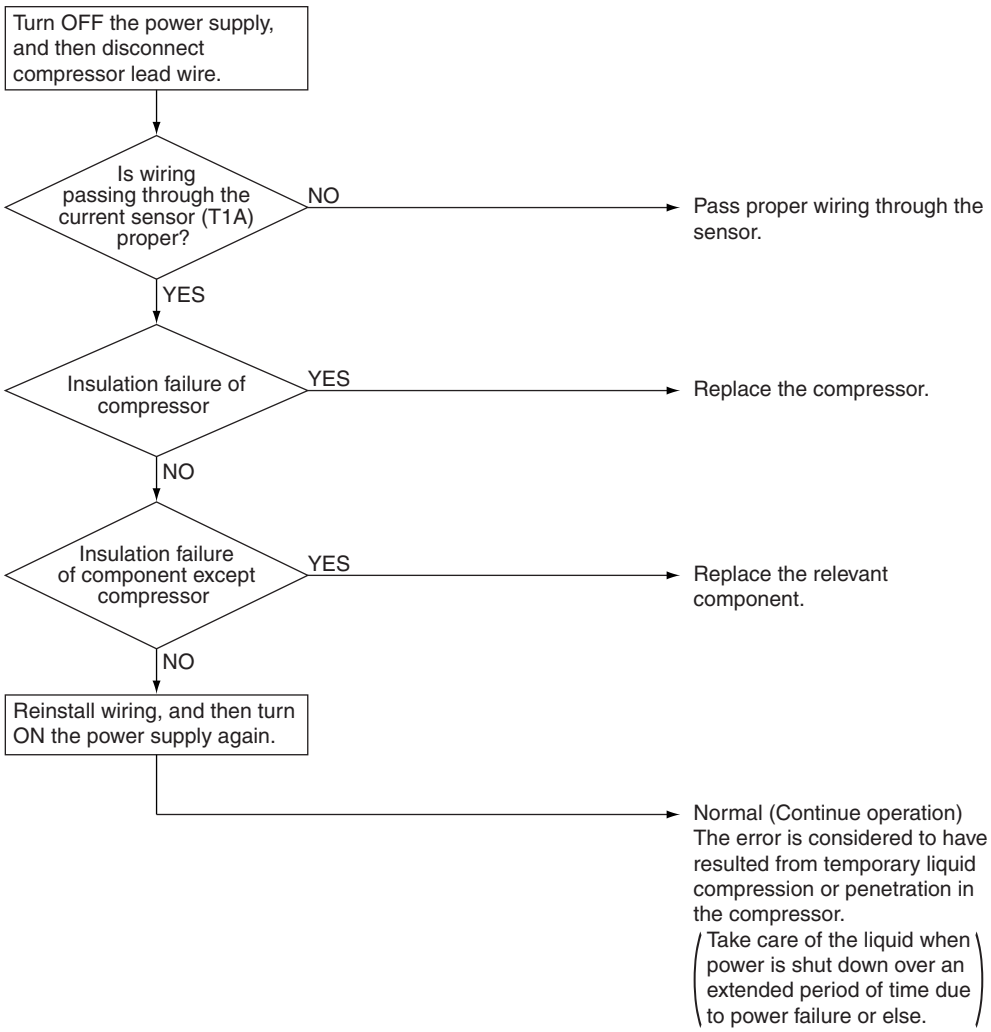

3.3 Missing of Earth Leakage Detection Core

Error Code

E2

Sub code: -06 to -08

Applicable Models

RXYQ-T

Method of Error Detection

Detect error according to whether or not there is continuity across the junction connector (X101A).

Error Decision Conditions

When no current flows at the time of turning ON the power supply.

Supposed Causes

- Disconnection of junction connector (X101A)
- Wiring disconnection
- Defective outdoor unit control PCB

Troubleshooting

Caution Be sure to turn off the power switch before connecting or disconnecting connectors, or parts may be damaged.

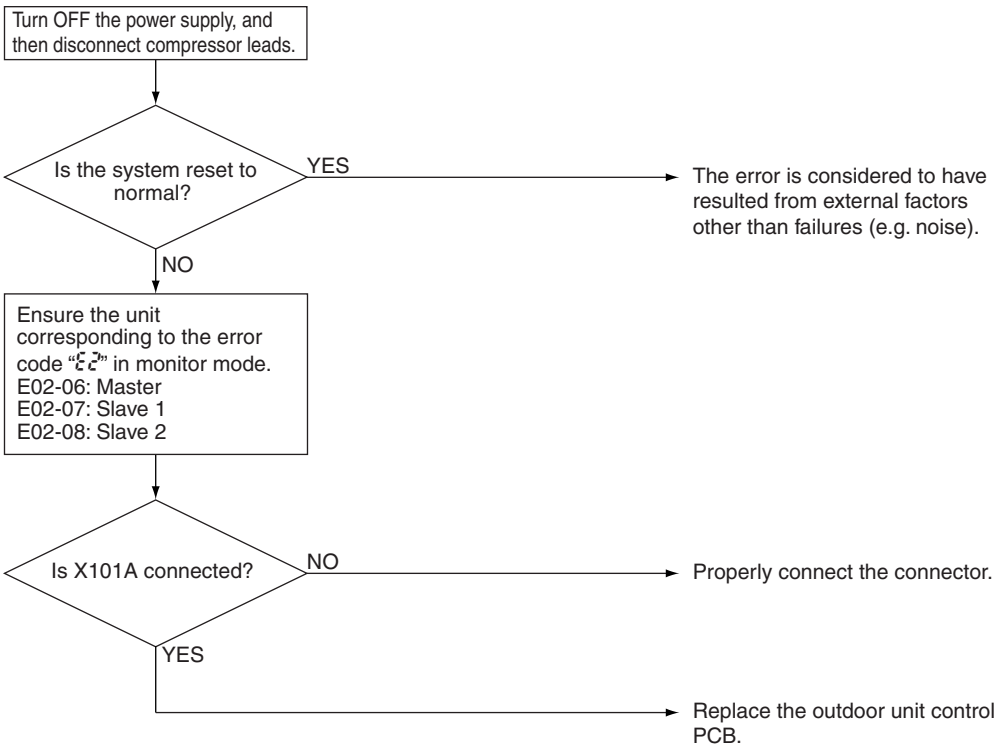

3.4 Actuation of High Pressure Switch

Error Code E3

Applicable Models RXYQ-T

Method of Error Detection Detect continuity across the high pressure switch in the protection device circuit.

Error Decision Conditions
When part of the protection device circuit opens.
(Reference) Operating pressure of the high pressure switch:
- Operating pressure: 4.0MPa
- Resetting pressure: 3.0MPa

Supposed Causes
- Activation of high pressure switch
- Defective high pressure switch
- Defective control PCB (A1P)
- Momentary power failure
- Defective high pressure sensor

Troubleshooting

Caution Be sure to turn off the power switch before connecting or disconnecting connectors, or parts may be damaged.

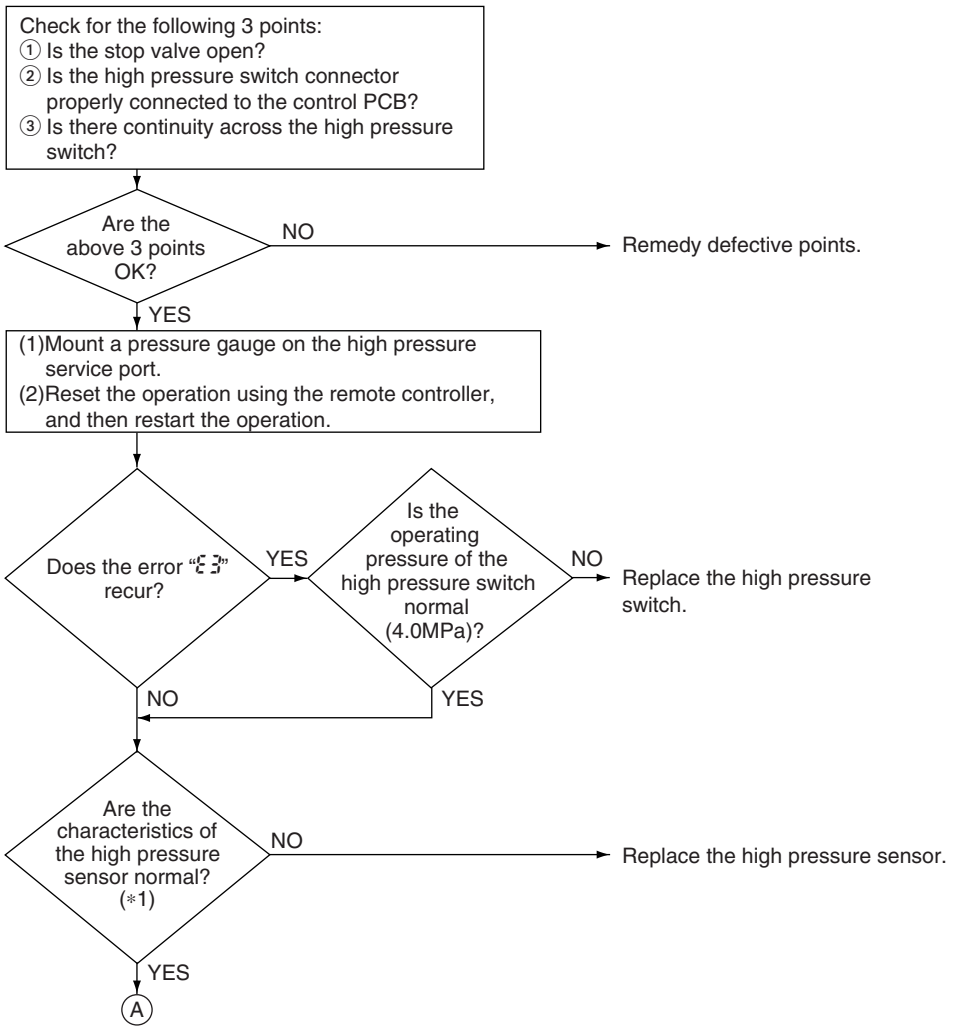

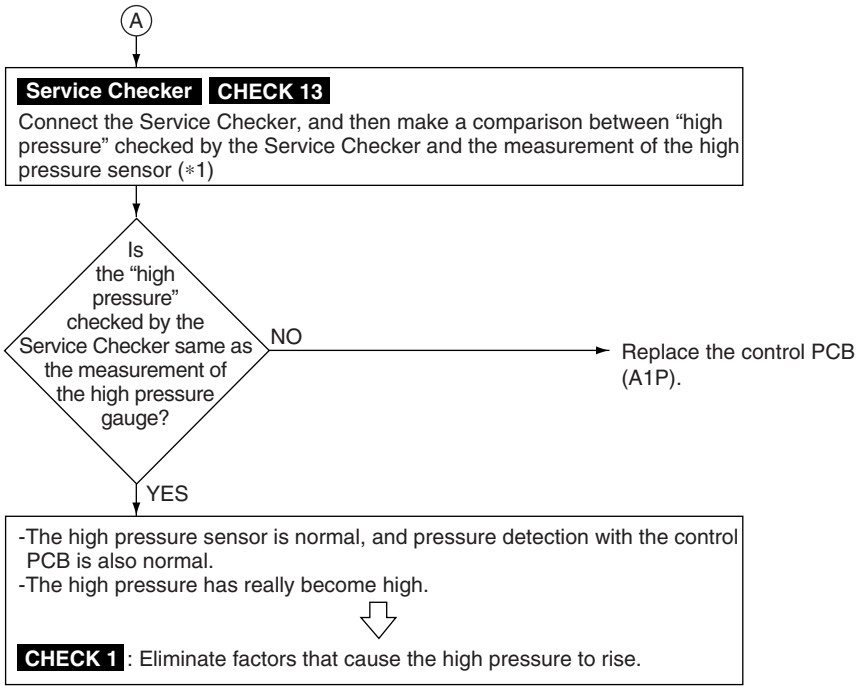

Note: ∗1. Make a comparison between voltage measured by the pressure sensor and that read by the pressure gauge.
(The pressure sensor makes measurement of voltage at its connector block to convert it to pressure. **CHECK 12**)

CHECK 1 Refer to P.217.

CHECK 12 Refer to P.224.

CHECK 13 Refer to P.224.

3.5 Actuation of Low Pressure Sensor

Error Code E4

Applicable Models RXYQ-T

Method of Error Detection Make judgement of pressure detected by the low pressure sensor with the control PCB.

Error Decision Conditions When low pressure caused a drop while the compressor is in operation:
- Operating pressure: 0.07MPa

Supposed Causes
- Abnormally drop in low pressure
- Defective low pressure sensor
- Defective outdoor unit PCB
- The stop valve is not opened

Troubleshooting

Caution Be sure to turn off the power switch before connecting or disconnecting connectors, or parts may be damaged.

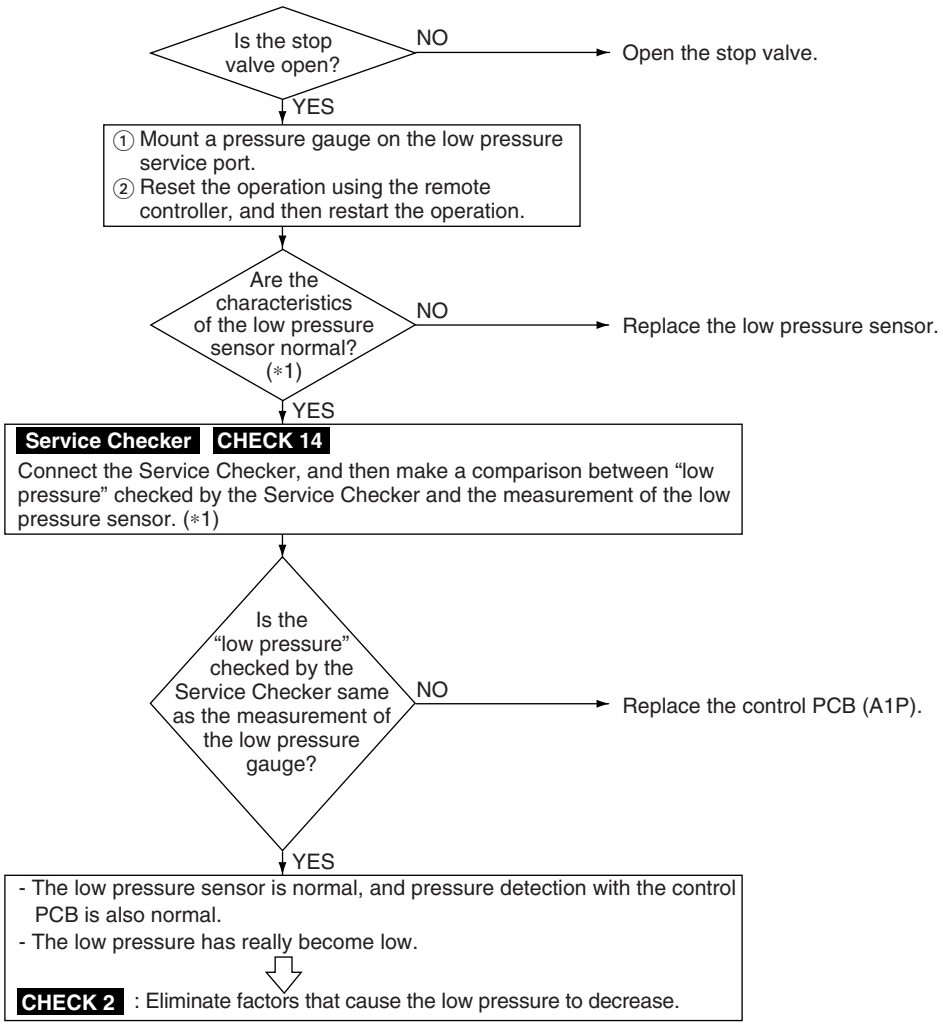

Note: ∗1. Make a comparison between voltage measured by the pressure sensor and that read by the pressure gauge.
(The pressure sensor makes measurement of voltage at its connector block to convert it to pressure. **CHECK 12**)

CHECK 2 Refer to P.218.

CHECK 12 Refer to P.224.

CHECK 14 Refer to P.224.

3.6 INV. Compressor Motor Lock

Error Code E5

Applicable Models RXYQ-T

Method of Error Detection Outdoor unit PCB takes the position signal from UVW line connected between the inverter and compressor, and the error is detected when any abnormality is observed in the phase-current waveform.

Error Decision Conditions When the inverter compressor motor does not operate even by starting it in forced startup mode.

Supposed Causes

- Inverter compressor lock
- High differential pressure (0.5MPa or more)
- UVW connection error
- Defective inverter PCB
- The stop valve is not opened

Troubleshooting

Caution Be sure to turn off the power switch before connecting or disconnecting connectors, or parts may be damaged.

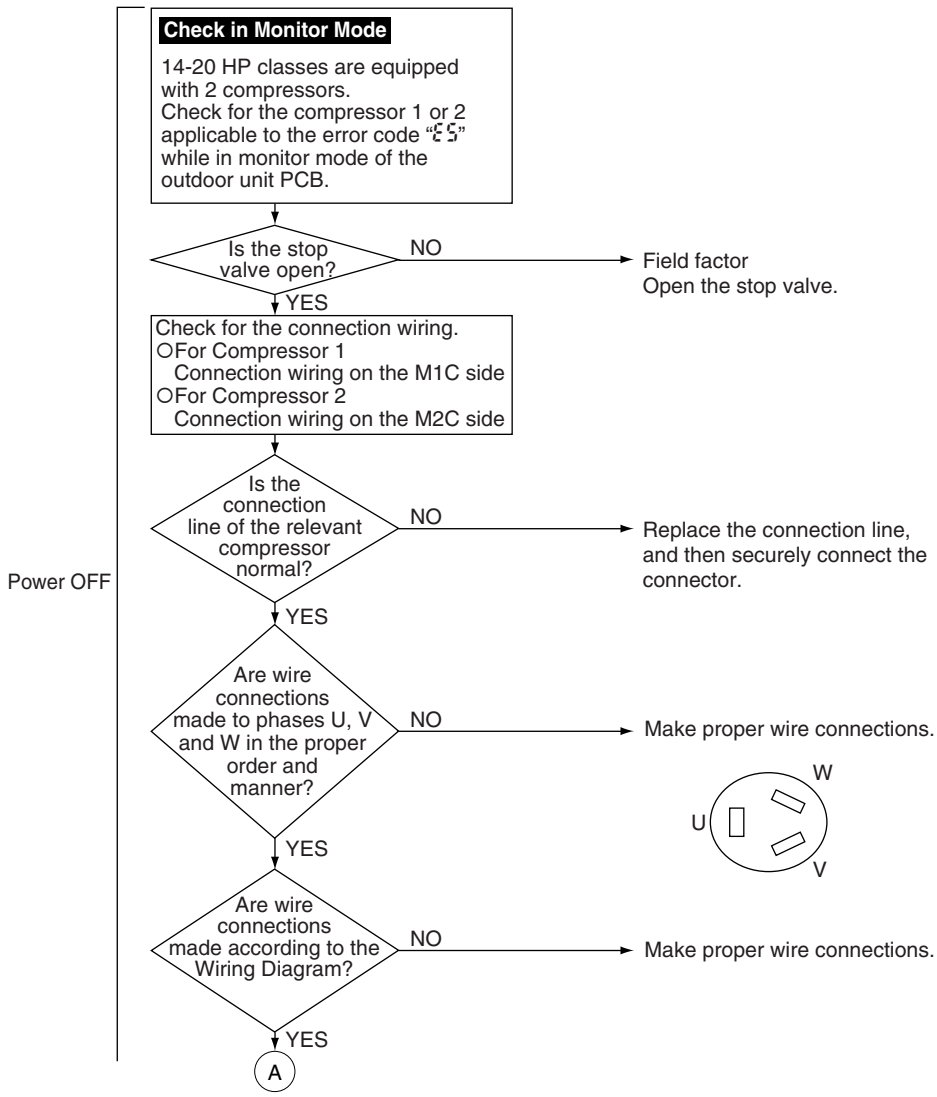

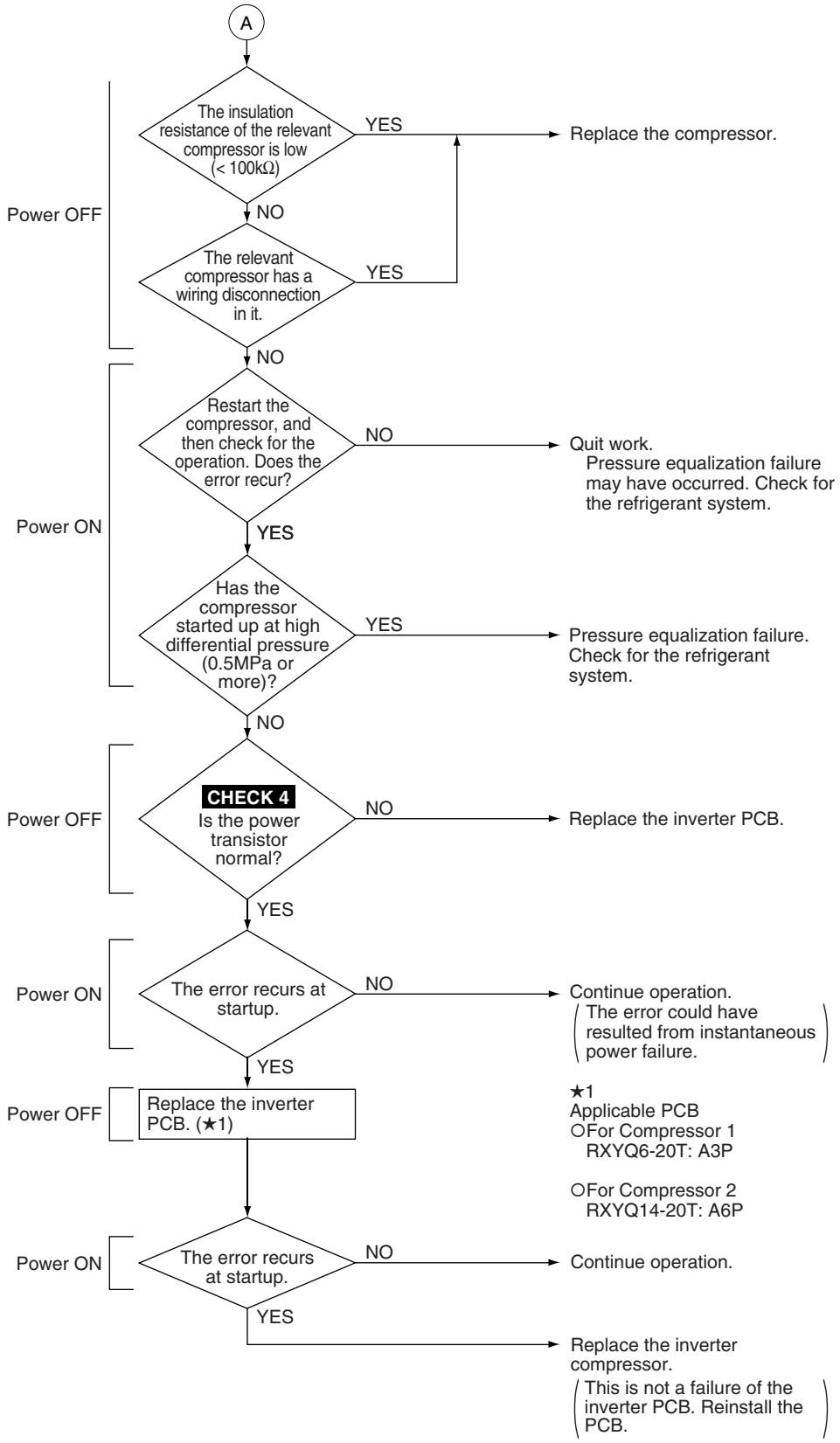

CHECK 4 Refer to P.220.

3.7 Compressor Damage Alarm

Error Code E6

Applicable Models RXYQ-T

Method of Error Detection Determine the symptom to be error by detecting the revolutions of the compressor and pressure values detected by the high and low pressure sensors, and further making a comparison between a theoretical current value of the compressor calculated from parameters detected and an actual current value detected by the power transistor.

Error Decision Conditions When a state in which the actual current value of the compressor is abnormally high (by 130% or more) compared to the theoretical current value continues for a period of 30 minutes.
∗ In case of a system with multi outdoor units, the system will return an alarm if there is any operational unit other than that applicable to "E6" or determine to be error if not.

Supposed Causes
- Defective compressor
- Defective high pressure sensor
- Defective low pressure sensor
- Defective control PCB
- Defective inverter PCB

Troubleshooting

Caution Be sure to turn off the power switch before connecting or disconnecting connectors, or parts may be damaged.

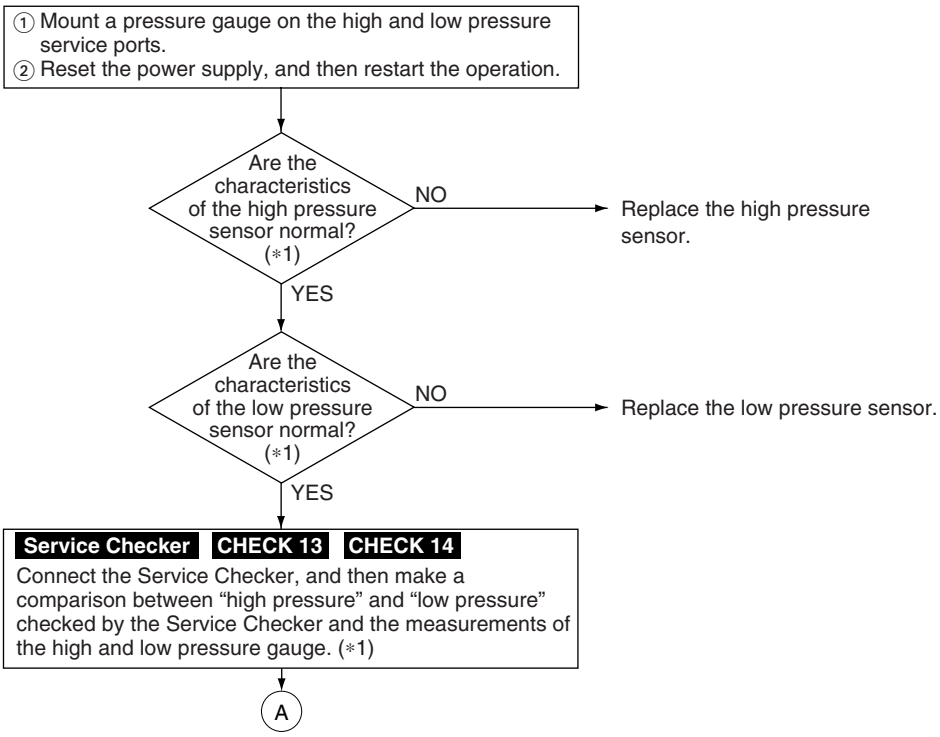

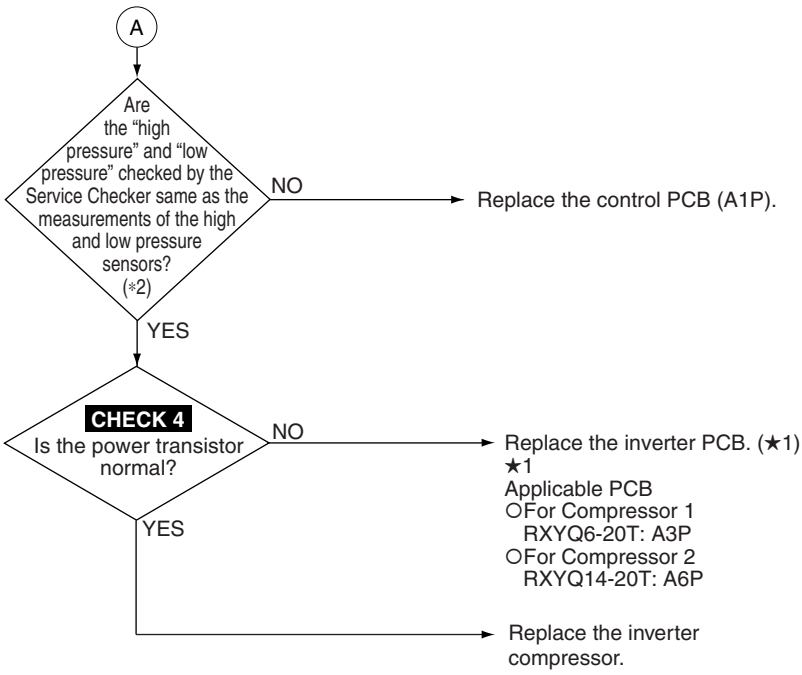

Note: *1. Make a comparison between voltage measured by the pressure sensor and that read by the pressure gauge.
(The pressure sensor makes measurement of voltage at its connector block to convert it to pressure. **CHECK 12**)

CHECK 4 Refer to P.220.

CHECK 12 Refer to P.224.

CHECK 13 Refer to P.224.

CHECK 14 Refer to P.224.

3.8 Outdoor Unit Fan Motor Abnormality

Error Code	E7
Applicable Models	RXYQ-T
Method of Error Detection	① Detect according to the value of current flowing through the inverter PCB (or fan inverter PCB in case of Fan Motor 2). ② Detect error of the fan motor system according to the fan revolutions detected by the hall IC during the fan motor runs.
Error Decision Conditions	① When overcurrent is detected from the inverter PCB or the fan inverter PCB (Detecting overcurrent 4 times will shut down the system). ② When the fan revolutions fall below a given level for a period of 6 seconds while in fan motor rotation mode (Detecting shortage of revolutions will shut down the system).
Supposed Causes	■ Fan motor failure ■ Neglect to connect or defective connection of harness/connector between the fan motor and the PCB ■ Fan does not rotate due to foreign matters caught in it ■ Clearing condition: fan motor performs normal operation for a period of 5 minutes

Troubleshooting

Caution Be sure to turn off the power switch before connecting or disconnecting connectors, or parts may be damaged.

Check in Monitor Mode
14-20 HP classes are equipped with 2 compressors.
Check for the compressor 1 or 2 applicable to the error code "C7" while in monitor mode of the outdoor unit PCB.

↓

Turn OFF the power supply, and then wait for a period of 10 minutes.

↓

There are foreign matters around the applicable fan.
- YES → Remove the foreign matters.
- NO ↓

Check for Connection of Connector
Check for the connections of all fan motor connectors.
("∗1: Wirings" shown below)

↓

Some connectors are disconnected.
- YES → Insert the connector.
- NO ↓

Check for Colors of Junction Connectors
Check for any wire connection errors in 2 units of fan motors.
- ○ Fan motor 1: Power supply cables and signal cables are all white.
- ○ Fan motor 2: Power supply cables and signal cables are red on the PCB side and white on the motor side.

↓

There is a junction relay connection error.
- YES → Correct the connection of the junction connector.
- NO ↓

(A)

∗1. Wirings

RXYQ6-12T (A4P)

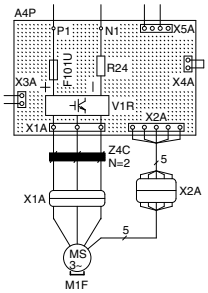

3D085819B

RXYQ14-20T (A7P) (A4P)

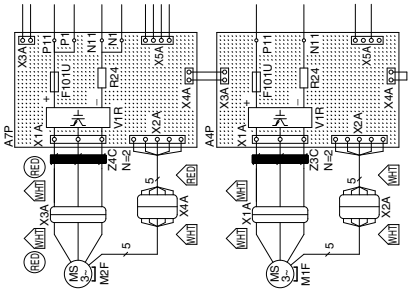

2D085820B

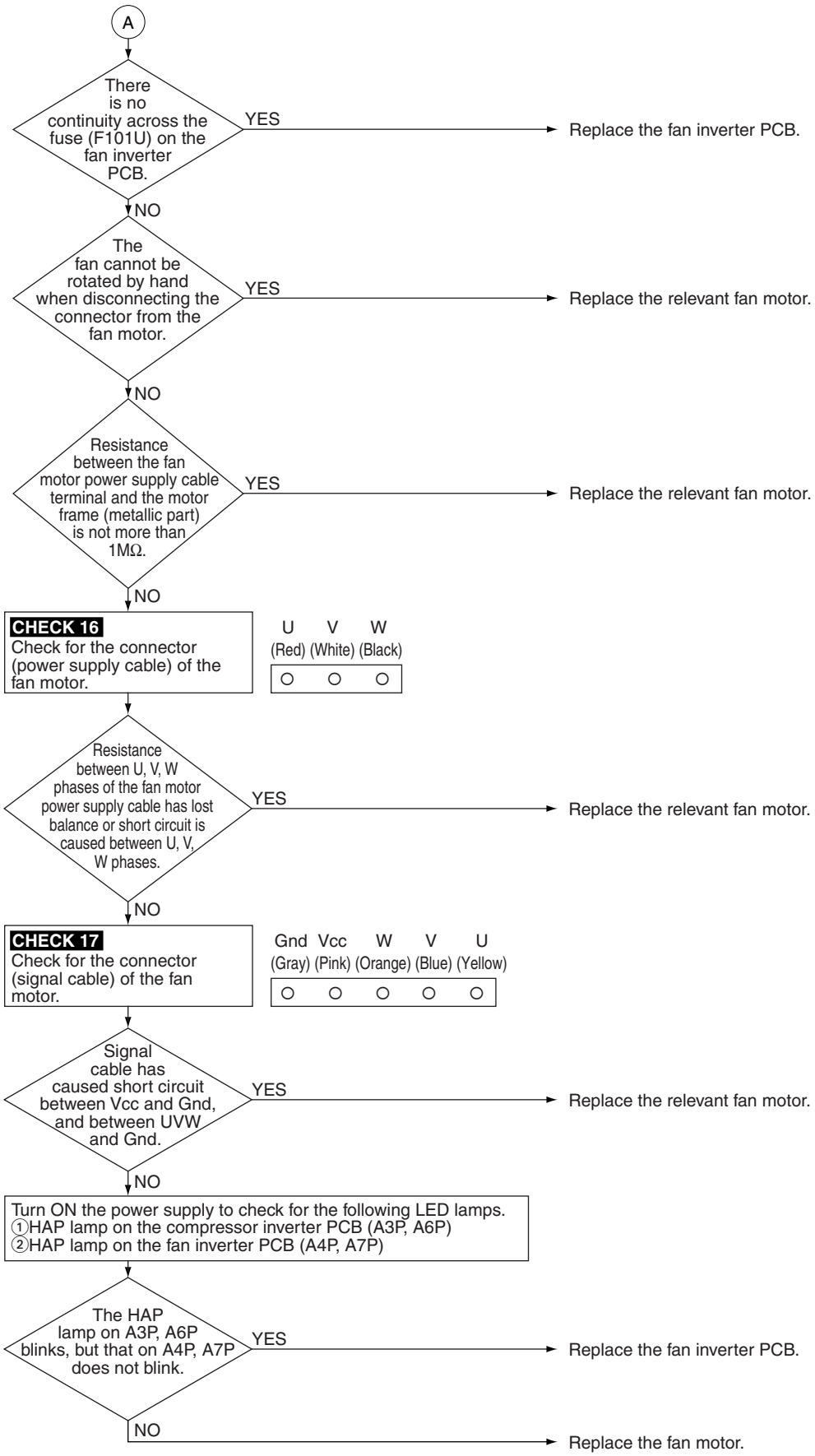

CHECK 16 Refer to P.226.

CHECK 17 Refer to P.226.

3.9 Electronic Expansion Valve Coil Abnormality

Error Code E9

Applicable Models RXYQ-T

Method of Error Detection Detect according to whether or not there is continuity across the electronic expansion valve coils (Y1E, Y2E).

Error Decision Conditions When no current flows through common (COM[+]) at the time of turning ON the power supply.

Supposed Causes
- Disconnection of connectors from electronic expansion valves (Y1E, Y2E)
- Defective electronic expansion valve coil
- Defective outdoor unit control PCB

Troubleshooting

Caution Be sure to turn off the power switch before connecting or disconnecting connectors, or parts may be damaged.

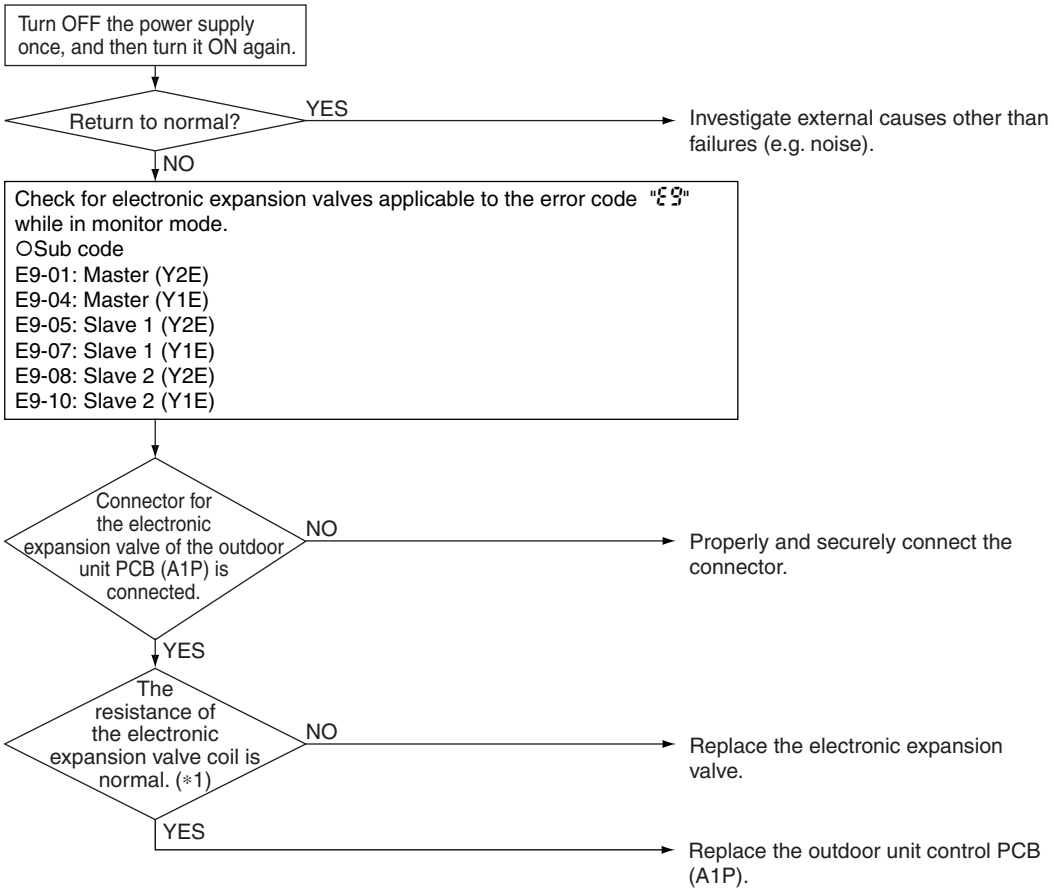

Note: ∗1. Make measurement of resistance between individual pins to ensure that it falls within the range of 40 to 50Ω.

Measurement Point	Acceptance Criteria
1 – 6	40 ~ 50Ω
2 – 6	
3 – 6	
4 – 6	

3.10 Discharge Pipe Temperature Abnormality

Error Code	F3
Applicable Models	RXYQ-T
Method of Error Detection	Detect according to temperature detected with the discharge pipe or compressor surface temperature thermistor.
Error Decision Conditions	■ When discharge pipe temperature becomes abnormally high (i.e., 135°C or more) ■ When discharge pipe temperature sharply rises (remains at 120°C or more for a period of consecutive 10 minutes) ■ When compressor surface temperature becomes abnormally high (i.e., 120°C or more) ■ When compressor surface temperature sharply rises (remains at 110°C or more for a period of consecutive 10 minutes)
Supposed Causes	■ Abnormal discharge pipe temperature ■ Defective discharge pipe thermistor ■ Abnormal compressor surface temperature ■ Defective compressor surface temperature thermistor ■ Defective outdoor unit control PCB

Troubleshooting

Caution Be sure to turn off the power switch before connecting or disconnecting connectors, or parts may be damaged.

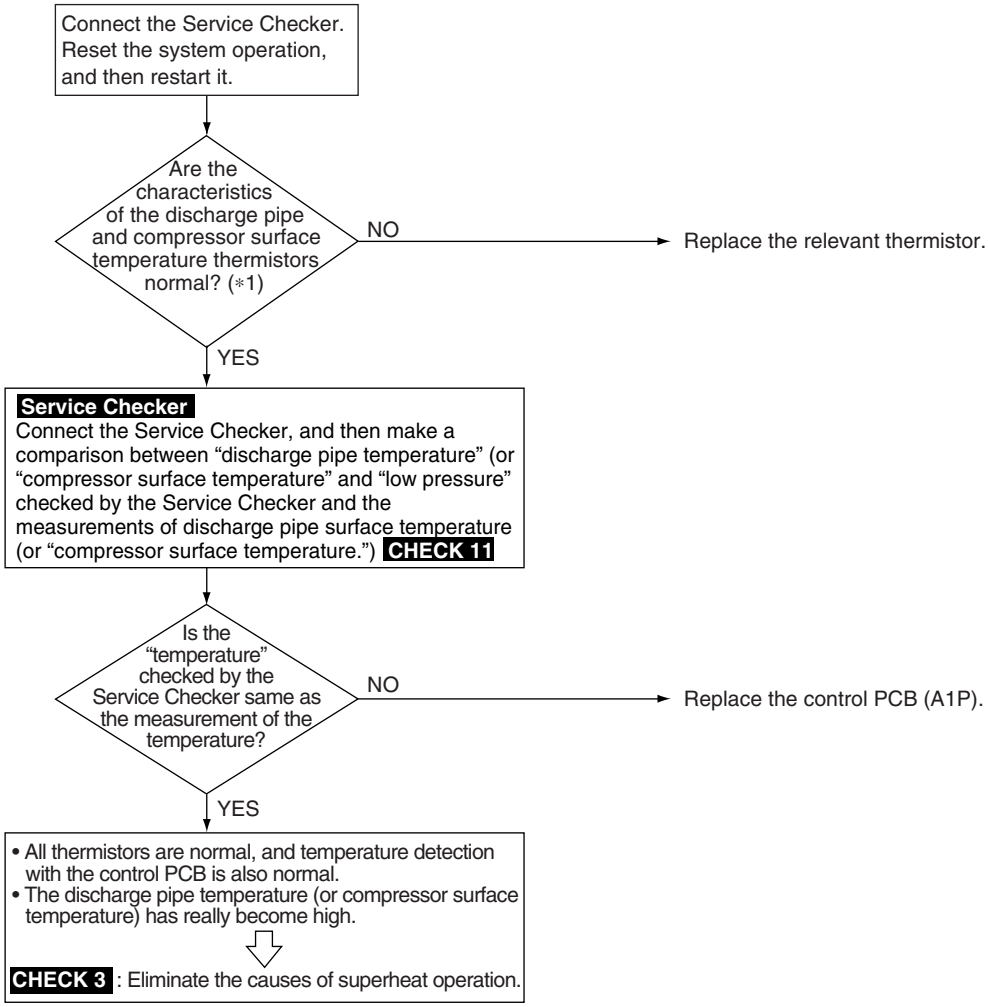

Note: ∗1. Error codes and thermistors

Error Code	Applicable Thermistor	RXYQ6·8T		RXYQ10·12T		RXYQ14-18T		RXYQ20T	
		Electric symbol	Connector	Electric symbol	Connector	Electric symbol	Connector	Electric symbol	Connector
d3	Discharge pipe (M1C) thermistor	R21T	X29A	R21T	X29A (Group connector)	R21T	X29A (Group connector)	R21T	X29A (Group connector)
	Discharge pipe (M2C) thermistor	—	—	—		R22T		R22T	
	Compressor surface temperature thermistor	—	—	R8T		—		R8T	

CHECK 3 Refer to P.219.

CHECK 11 Refer to P.223.

3.11 Wet Alarm

Error Code

F4

Applicable Models

RXYQ-T

Method of Error Detection

In cooling operation, detect the condition under which liquid refrigerant returns to the compressor, according to the temperature and pressure of each part.

Error Decision Conditions

When the following wet state continues for a period of 90 minutes, an alert is issued.
An error is defined for 120 minutes.

- Wet state in outdoor units

When the following wet state continues for a period of 45 minutes, an alert is issued.

- Wet state in some of indoor units

Supposed Causes

- Defective suction pipe thermistor
- Defective discharge pipe thermistor
- Defective high pressure sensor
- Defective indoor unit electronic expansion valve
- Dirty air filter

Troubleshooting

Caution Be sure to turn off the power switch before connecting or disconnecting connectors, or parts may be damaged.

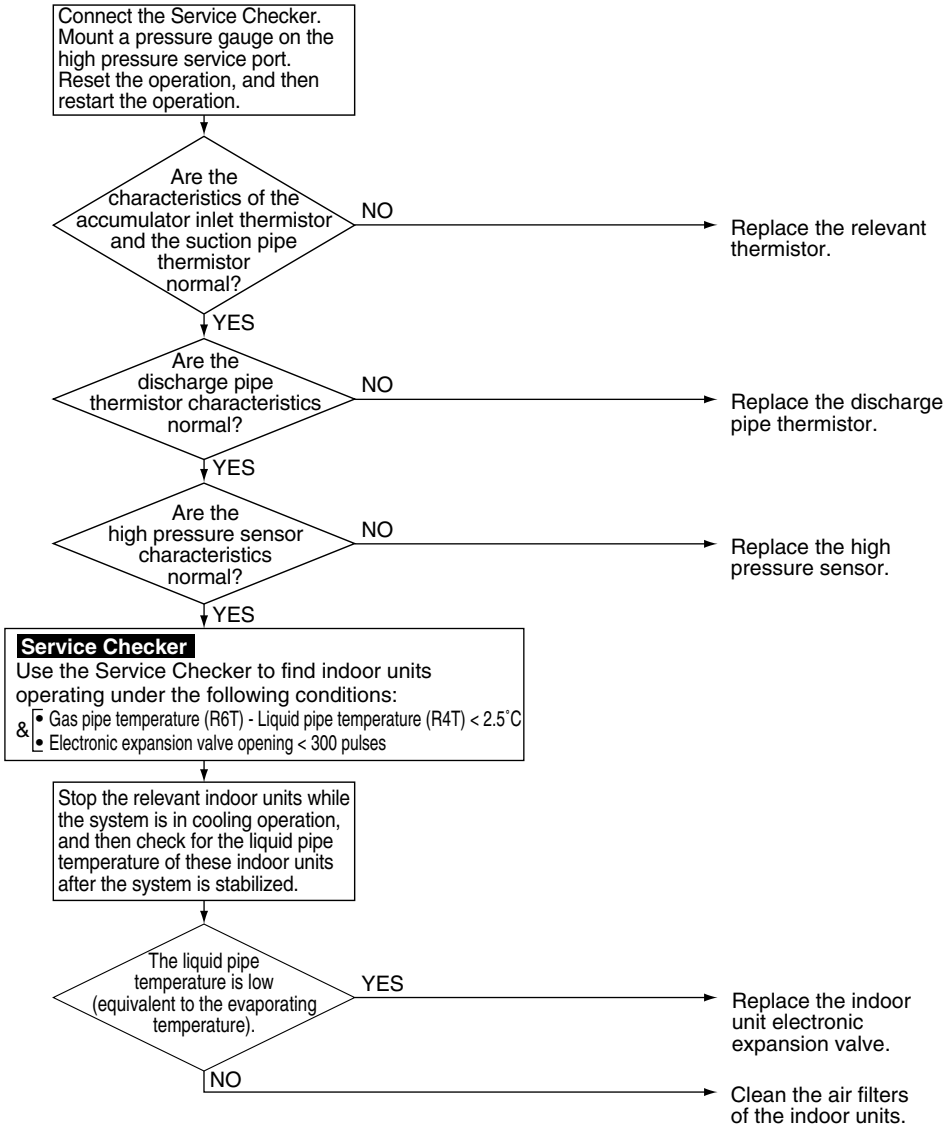

3.12 Refrigerant Overcharged

Error Code

F6

Applicable Models

RXYQ-T

Method of Error Detection

Detect overcharged refrigerant according to outdoor air temperature, heat exchanging deicer temperature, and liquid pipe temperature during check operation.

Error Decision Conditions

When the amount of refrigerant, which is calculated using outdoor air temperature, heat exchanging deicer temperature, and liquid pipe temperature during check operation, exceeds the regular charge amount by 30% or more
(If refrigerant is charged slightly over the regular charge amount, "F6" may be displayed on the remote controller.)

Supposed Causes

- Refrigerant overcharged
- Disconnection of outdoor air thermistor
- Disconnection of heat exchanging deicer thermistor
- Disconnection of liquid pipe temperature thermistor

Troubleshooting

Caution Be sure to turn off the power switch before connecting or disconnecting connectors, or parts may be damaged.

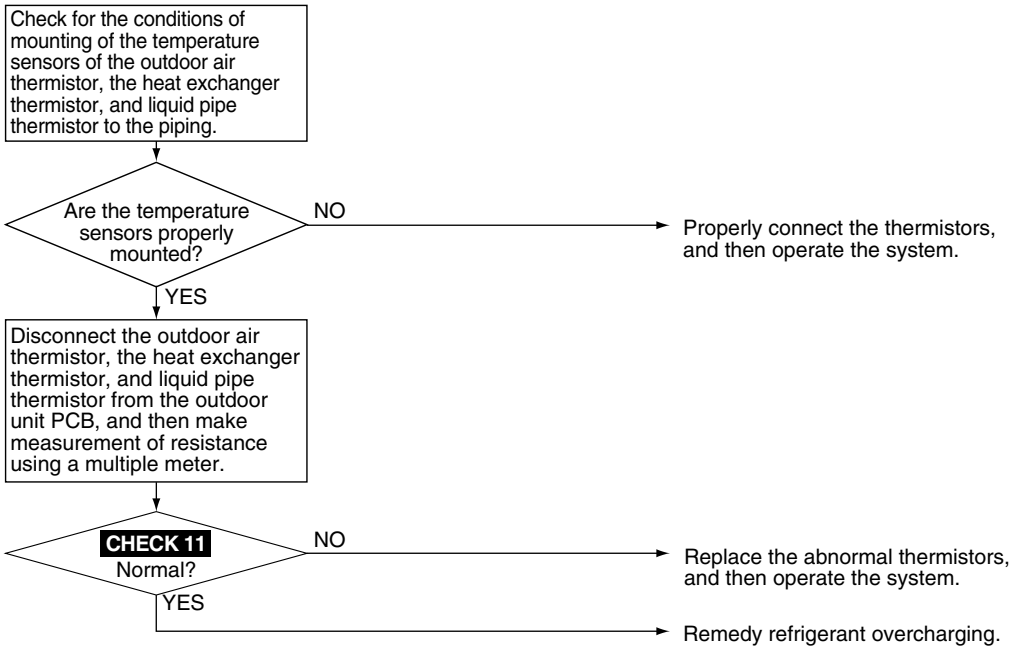

CHECK 11 Refer to P.223.

3.13 Harness Abnormality (between Control PCB and Inverter PCB)

Error Code

F6

Applicable Models

RXYQ-T

Method of Error Detection

Check for the transmission conditions of the following jumpers between the PCB using micro-computer:

- 6-20 HP Inverter 1
  Between X28A (A1P) and X6A (A3P)
- 14-20 HP Inverter 2
  Between X62A (A3P) and X6A (A6P)

Error Decision Conditions

When normal transmission between PCB is disabled during the compressor stops running.

Supposed Causes

- Defective connection of jumpers between PCB
- Defective control PCB (A1P)
- Defective inverter PCB

Troubleshooting

Caution Be sure to turn off the power switch before connecting or disconnecting connectors, or parts may be damaged.

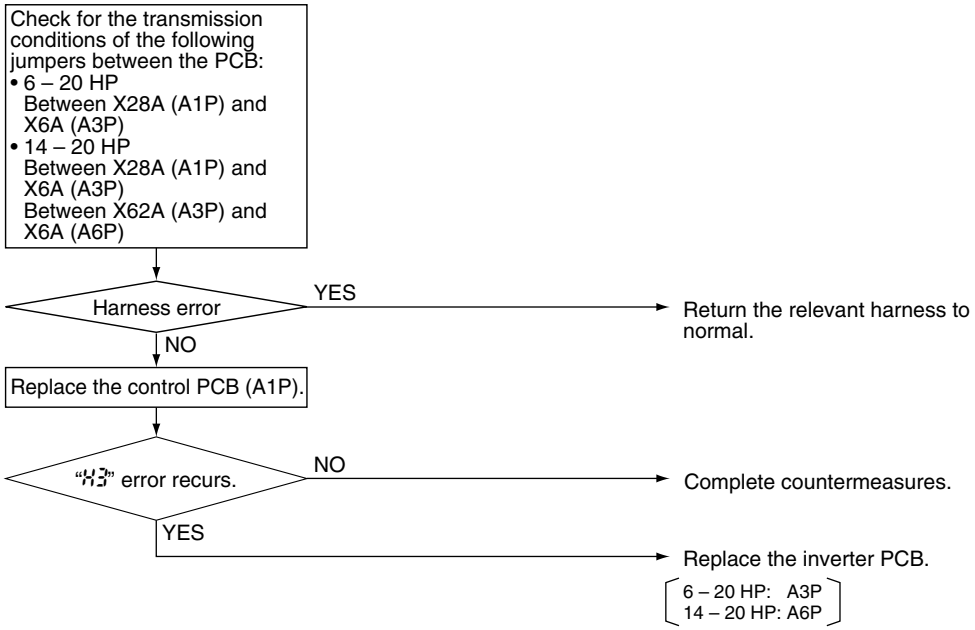

3.14 Outdoor Unit Fan Motor Signal Abnormality

Error Code H7

Applicable Models RXYQ-T

Method of Error Detection Detect of abnormal signal from fan motor.

Error Decision Conditions When an abnormal signal is detected at startup of the fan motor operation.

Supposed Causes
- Abnormal signal from fan motor (Circuit failure)
- Disconnection/Short circuit in fan motor leads or disconnection of connector
- Defective inverter PCB (A3P, A6P)

Troubleshooting

Caution Be sure to turn off the power switch before connecting or disconnecting connectors, or parts may be damaged.

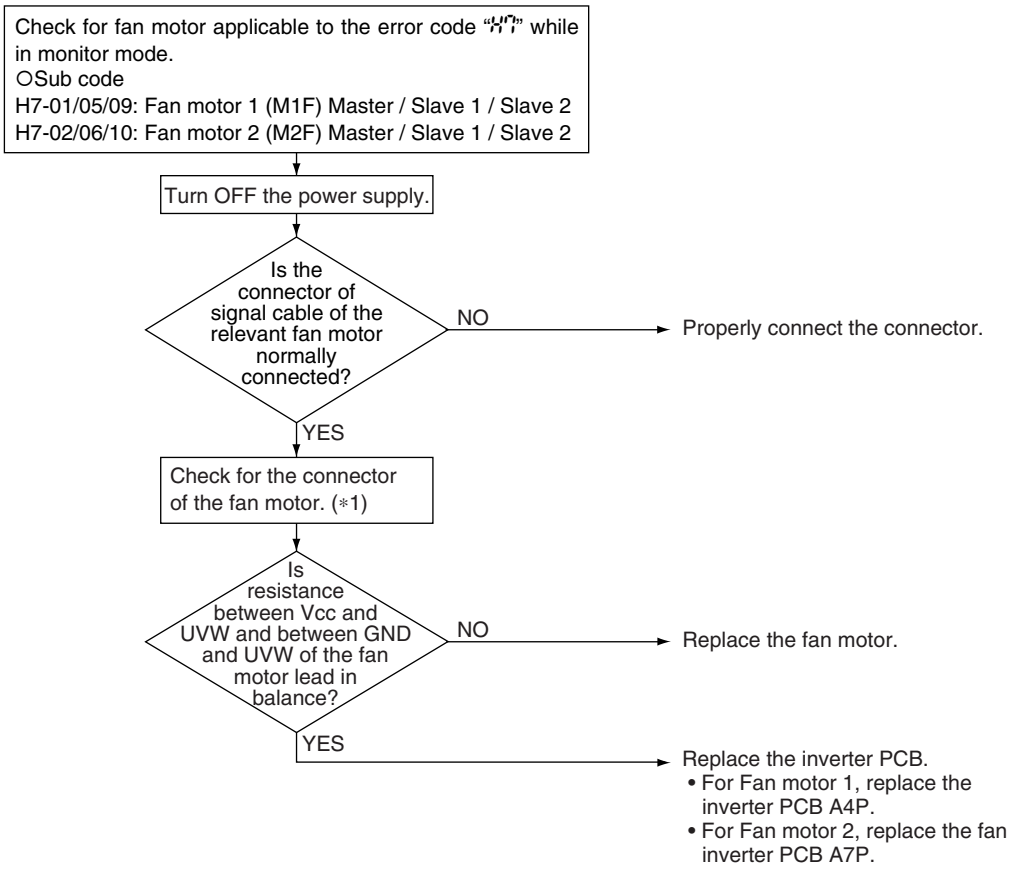

Note: ∗1. Procedure for checking for the connector of the fan motor.

(1) Turn OFF the power supply.

(2) Disconnect the connector (X2A or X4A) from the PCB, and then make measurement of the following resistance. Acceptance criteria: Resistance between phases falls within the range of ±20%.

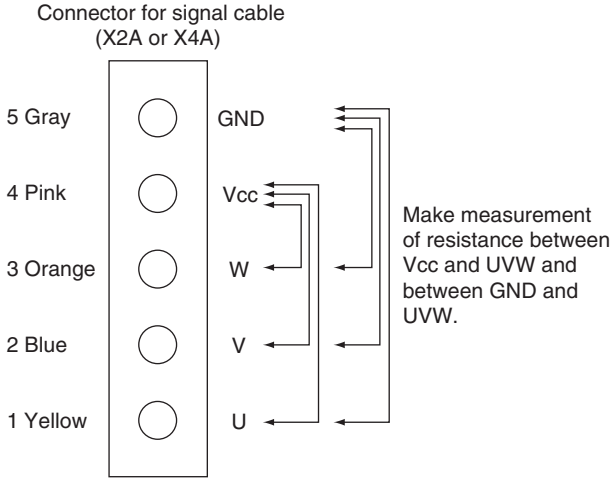

3.15 Thermistor Abnormality

Error Code H9, J3, J5, J6, J7, J9

Applicable Models RXYQ-T

Method of Error Detection Detect according to temperature detected with individual thermistors.

Error Decision Conditions When the system is in operation and the thermistor causes wiring disconnection or short circuit in it.

Supposed Causes
- Defective connection of thermistor
- Defective thermistor
- Defective outdoor unit PCB

Troubleshooting

Caution Be sure to turn off the power switch before connecting or disconnecting connectors, or parts may be damaged.

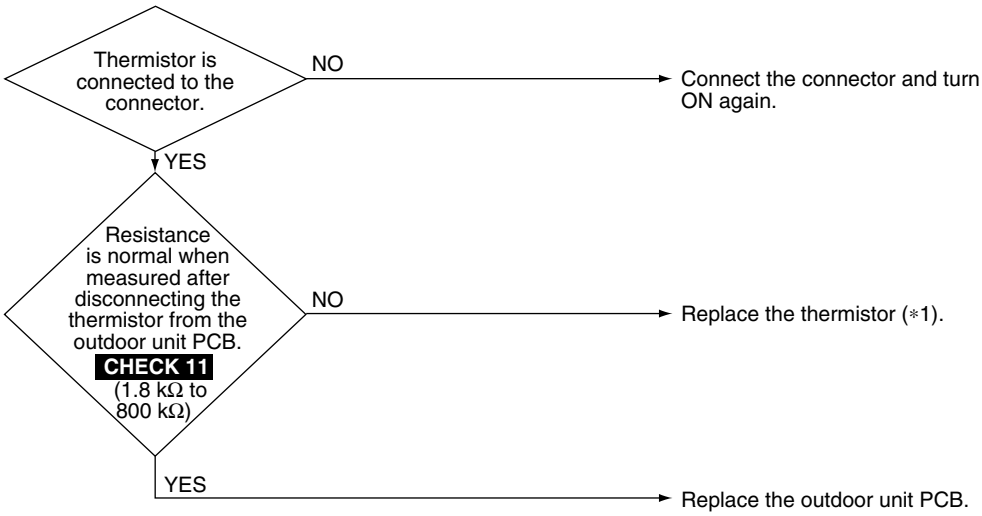

Note: ∗1. Error codes and thermistors

Error Code	Applicable Thermistor	RXYQ6·8T		RXYQ10·12T		RXYQ14-18T		RXYQ20T	
		Electric symbol	Connector	Electric symbol	Connector	Electric symbol	Connector	Electric symbol	Connector
H9	Outdoor air	R1T	X18A	R1T	X18A	R1T	X18A	R1T	X18A
J3	Discharge pipe	R21T	X29A	R21T	X29A (Group connector)	R21T	X29A (Group connector)	R21T	X29A (Group connector)
	Discharge pipe (M2C) thermistor	—	—	—		R22T		R22T	
	Compressor surface temperature thermistor	—	—	R8T		—		R8T	
J5	Accumulator inlet thermistor	R3T	X30A (Group connector)	R3T	X30A (Group connector)	R3T	X30A (Group connector)	R3T	X30A (Group connector)
J6	Heat exchanging deicer thermistor	R7T		R7T		R7T		R7T	
J7	Subcooling heat exchanger liquid pipe thermistor	R5T		R5T		R5T		R5T	
J8	Heat exchanger liquid pipe thermistor	R4T		R4T		R4T		R4T	
J9	Heat exchanger gas pipe thermistor	R6T		R6T		R6T		R6T	

CHECK 11 Refer to P.223.

3.16 High Pressure Sensor Abnormality

Error Code UP

Applicable Models RXYQ-T

Method of Error Detection Detect according to temperature detected with the high pressure sensor.

Error Decision Conditions When the high pressure sensor causes wiring disconnection or open circuit (at pressure of not less than 4.22MPa or not more than 0.01MPa).

Supposed Causes

- Defective high pressure sensor
- Connection of low pressure sensor in mistake for high pressure sensor
- Defective outdoor unit PCB
- Defective connection of high pressure sensor

Troubleshooting

Caution Be sure to turn off the power switch before connecting or disconnecting connectors, or parts may be damaged.

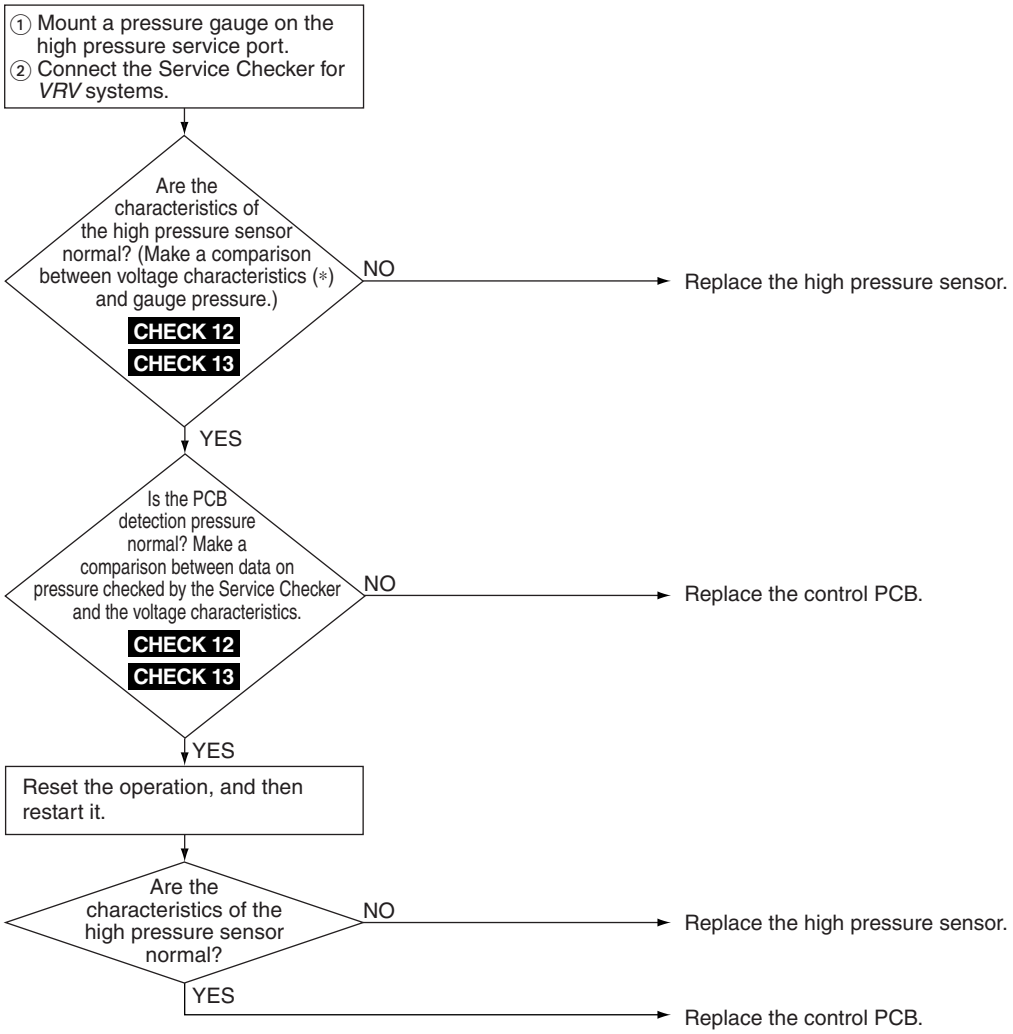

CHECK 12 Refer to P.224.

CHECK 13 Refer to P.224.

3.17 Low Pressure Sensor Abnormality

Error Code

Applicable Models

RXYQ-T

Method of Error Detection

Detect according to temperature detected with the low pressure sensor.

Error Decision Conditions

When the low pressure sensor causes wiring disconnection or open circuit (at pressure of not less than 1.77MPa or not more than -0.01MPa).

Supposed Causes

- Defective low pressure sensor
- Connection of high pressure sensor in mistake for low pressure sensor
- Defective outdoor unit PCB
- Defective connection of low pressure sensor

Troubleshooting

Caution Be sure to turn off the power switch before connecting or disconnecting connectors, or parts may be damaged.

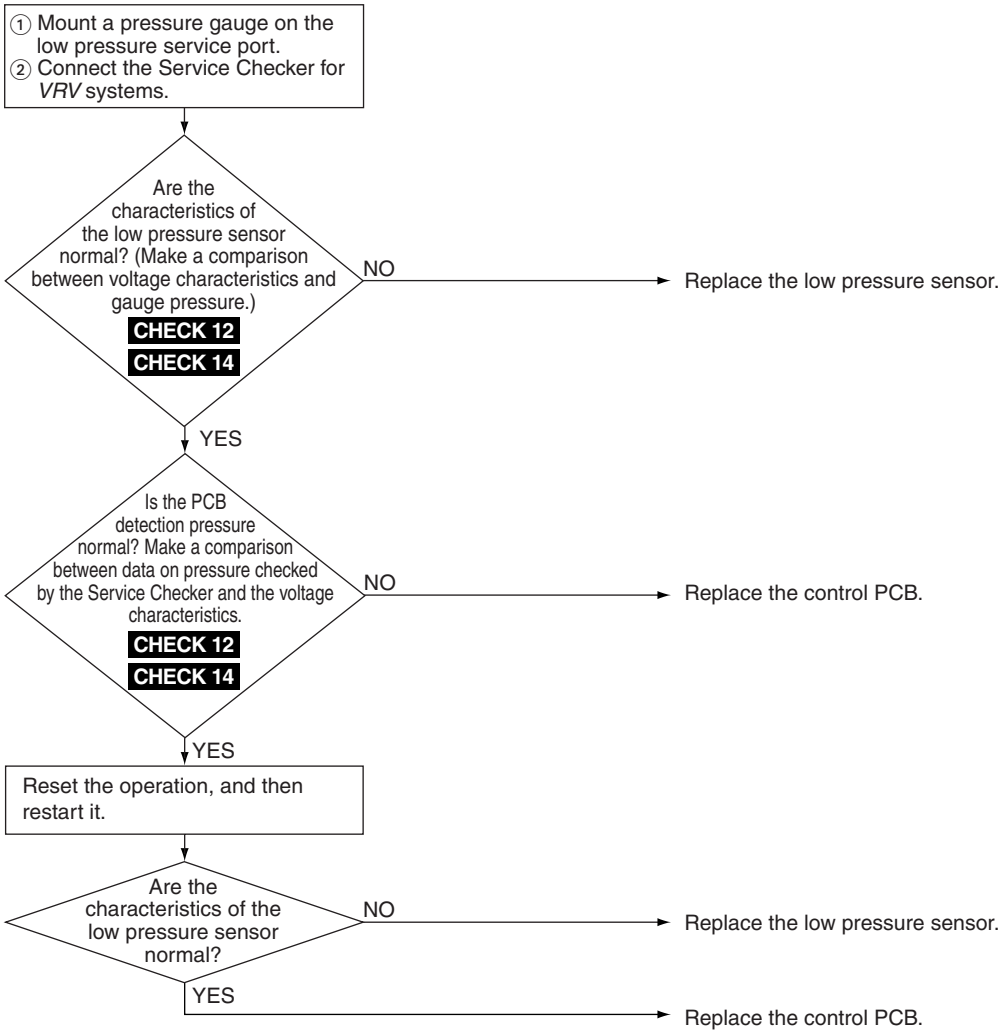

CHECK 12 Refer to P.224.

CHECK 14 Refer to P.224.

3.18 Inverter PCB Abnormality

Error Code	L 1
Applicable Models	RXYQ-T
Method of Error Detection	■ Detect according to current value detected during the output of waveform before compressor startup ■ Detect according to current value detected with the current sensor during sync operation for startup
Error Decision Conditions	■ When overcurrent (OCP) flows during the output of waveform ■ When the current sensor error during sync operation ■ When IPM error occurs
Supposed Causes	■ Inverter PCB (■ IPM failure ■ Current sensor failure ■ Drive circuit failure)

Troubleshooting

Caution Be sure to turn off the power switch before connecting or disconnecting connectors, or parts may be damaged.

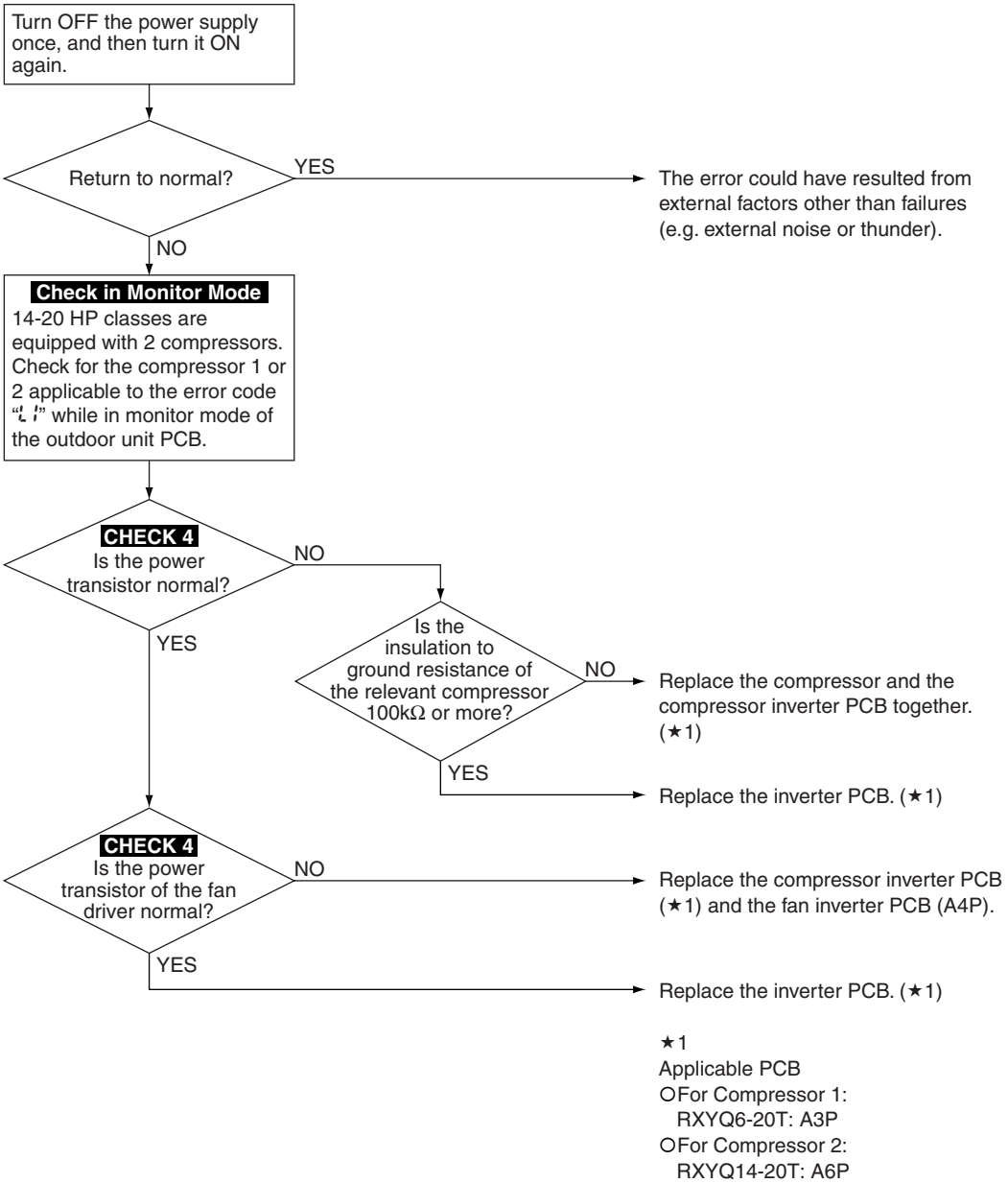

CHECK 4 Refer to P.220.

3.19 Reactor Temperature Rise Abnormality

Error Code L3

Applicable Models RXYQ-T

Method of Error Detection Detect according to the value detected with the reactor surface thermistor.

Error Decision Conditions When the temperature detected with the reactor surface thermistor is more than the specified temperature.

Supposed Causes

- Defective connection of harness
- Defective reactor surface thermistor
- Defective inverter PCB

Troubleshooting

Caution Be sure to turn off the power switch before connecting or disconnecting connectors, or parts may be damaged.

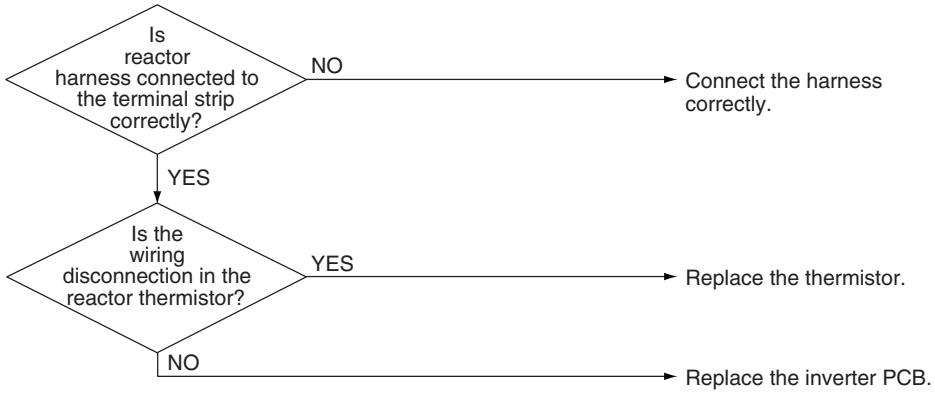

3.20 Inverter Radiation Fin Temperature Rise Abnormality

Error Code L4

Applicable Models RXYQ-T

Method of Error Detection Detect temperature of power module of the compressor inverter PCB.

Error Decision Conditions Thermistor located inside the power module of the inverter PCB for compressor and fan motor. Cooling tube plate poor heat-exchange.

Supposed Causes

- Cooling tube plate not fixed with screws.
- "U0" error.
- Defective inverter PCB.
- High outdoor air temperature.

Troubleshooting

Caution Be sure to turn off the power switch before connecting or disconnecting connectors, or parts may be damaged.

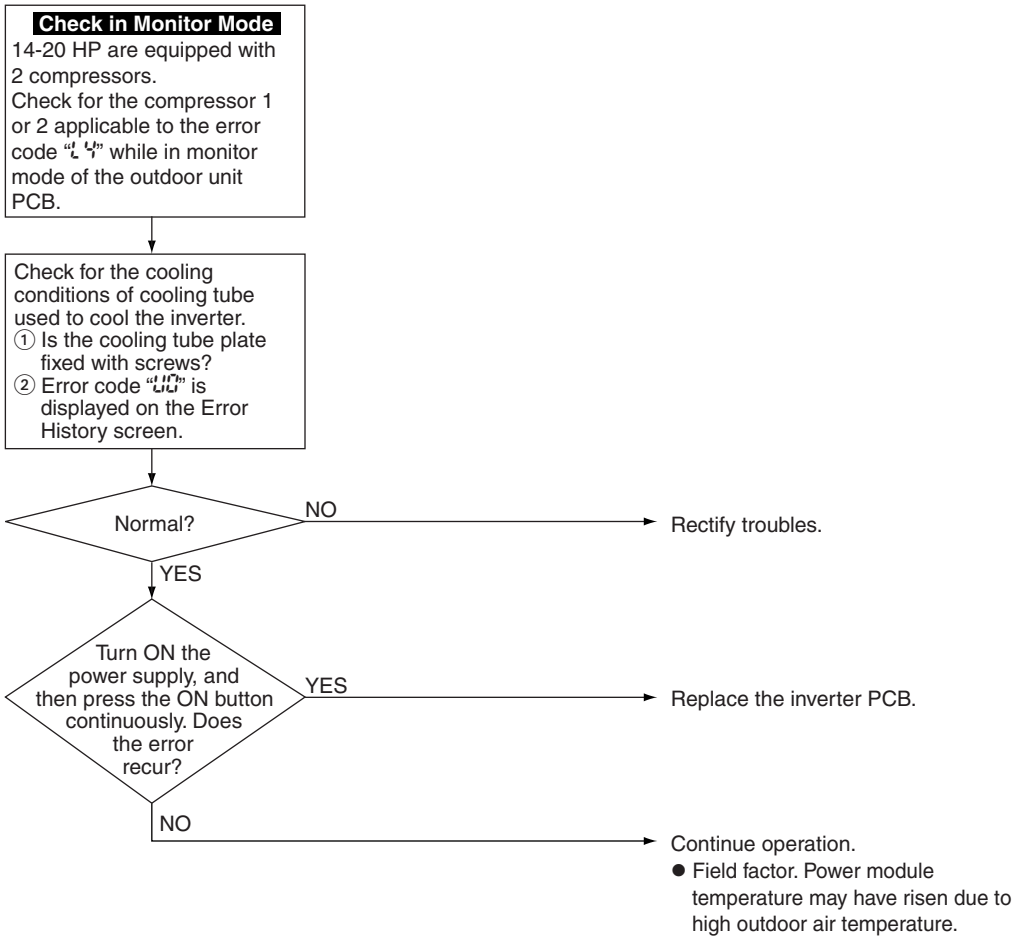

3.21 INV. Compressor Instantaneous Overcurrent

Error Code L5

Applicable Models RXYQ-T

Method of Error Detection Detect current flowing through the power transistor.

Error Decision Conditions When instantaneously overcurrent flows through the power transistor:

- Compressor type
  JT1GCVDKYR@T
  trigger point = 32 A
- Compressor type
  JT15JBVDKYR@S
  trigger point = 51.2 A

Supposed Causes

- Defective compressor coil (such as wiring disconnection or insulation failure)
- Compressor startup failure (mechanical lock)
- Defective inverter PCB

Troubleshooting

Compressor inspection

Caution Be sure to turn off the power switch before connecting or disconnecting connectors, or parts may be damaged.

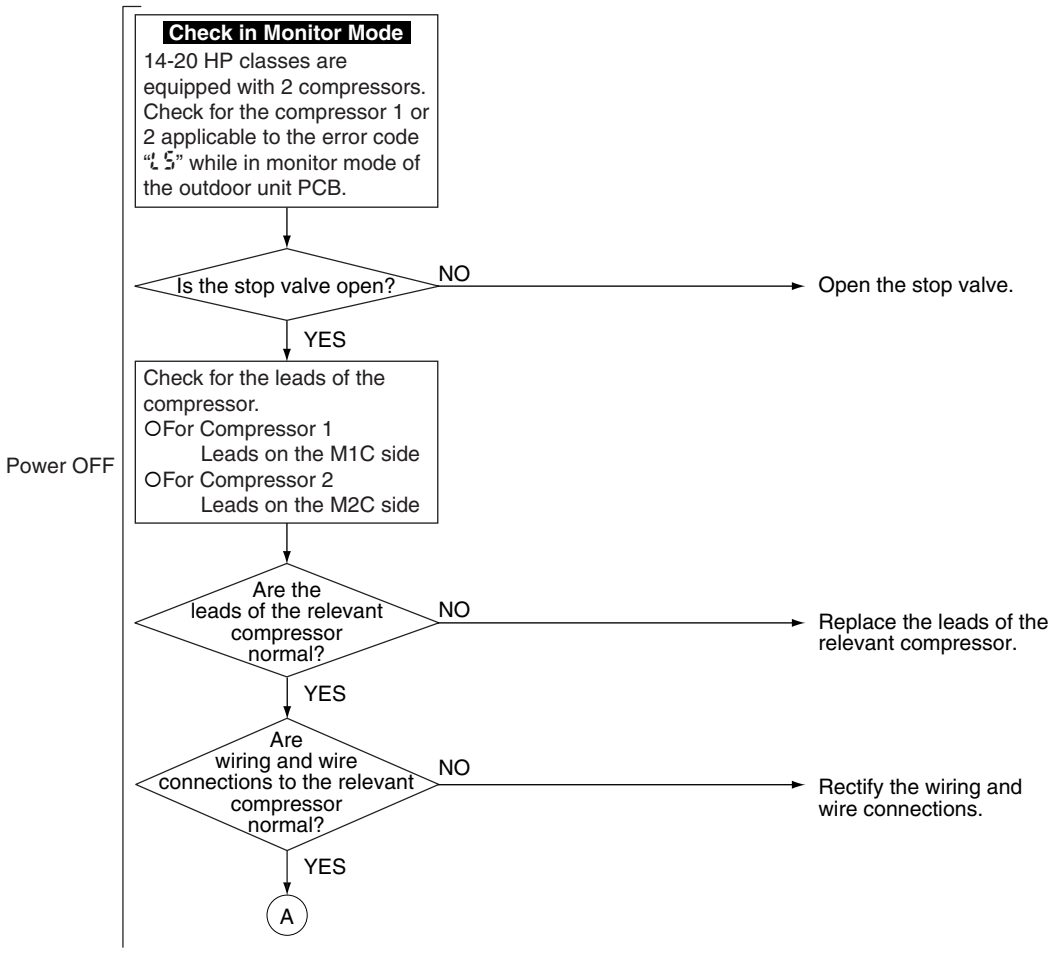

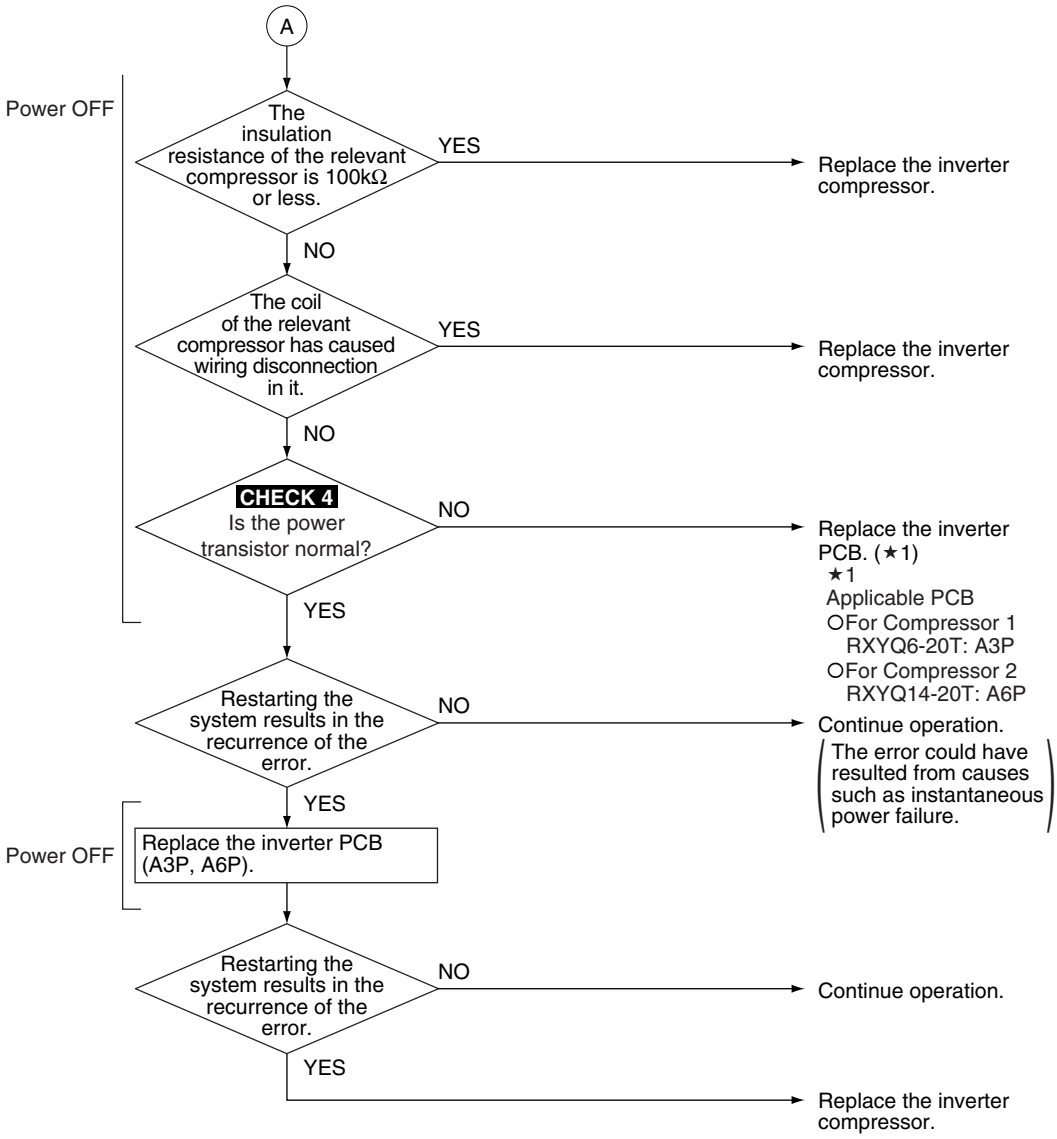

CHECK 4 Refer to P.220.

3.22 INV. Compressor Overcurrent

Error Code L8

Applicable Models RXYQ-T

Method of Error Detection Detect current flowing through the power transistor.

Error Decision Conditions

When the secondary-side inverter current exceeds:
(1) for a period of consecutive 5 seconds:
compressor type JT1GCVDKYR@T
trigger point = 19 A
compressor type JT15JBVDKYR@S
trigger point = 25 A.
(2) for a period of consecutive 260 seconds:
compressor type JT1GCVDKYR@T
trigger point = 16.1 A
compressor type JT15JBVDKYR@S
trigger point = 22.5 A.

Supposed Causes

- Compressor overloaded
- Wiring disconnection in compressor coil
- Disconnection of compressor wiring
- Defective inverter PCB

Troubleshooting

Caution Be sure to turn off the power switch before connecting or disconnecting connectors, or parts may be damaged.

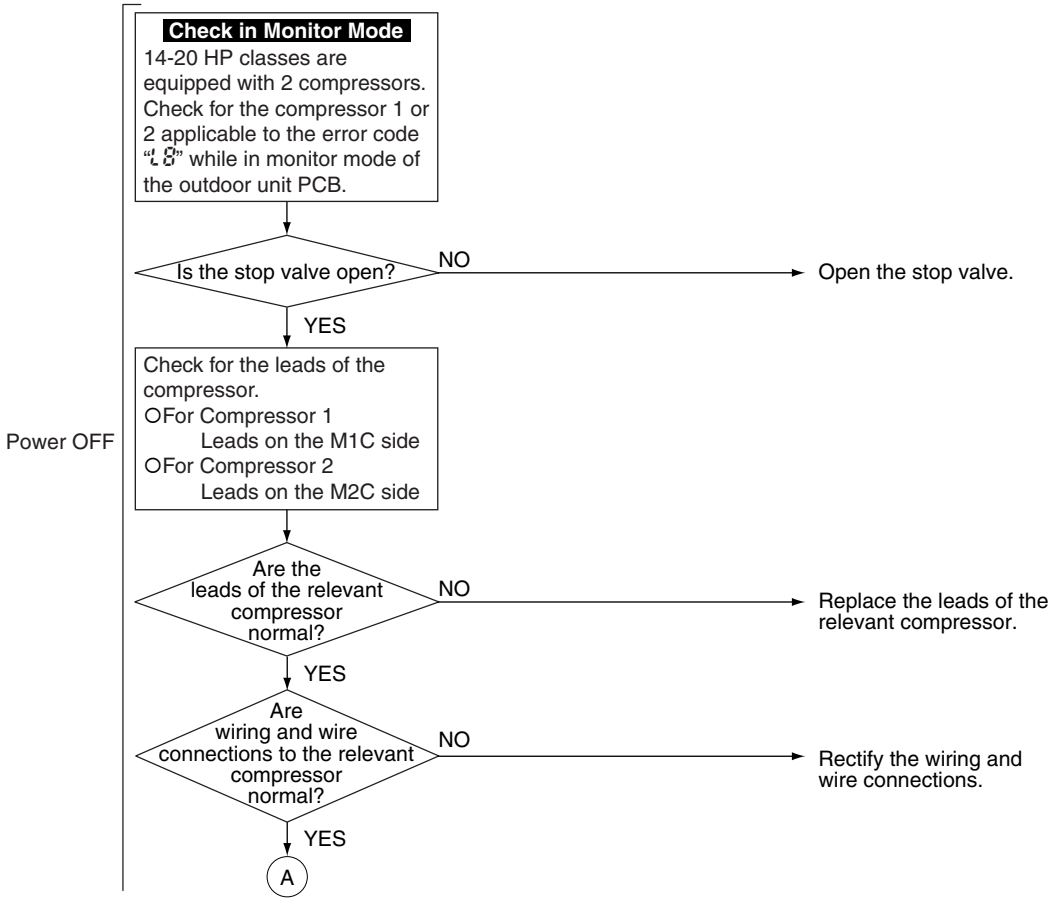

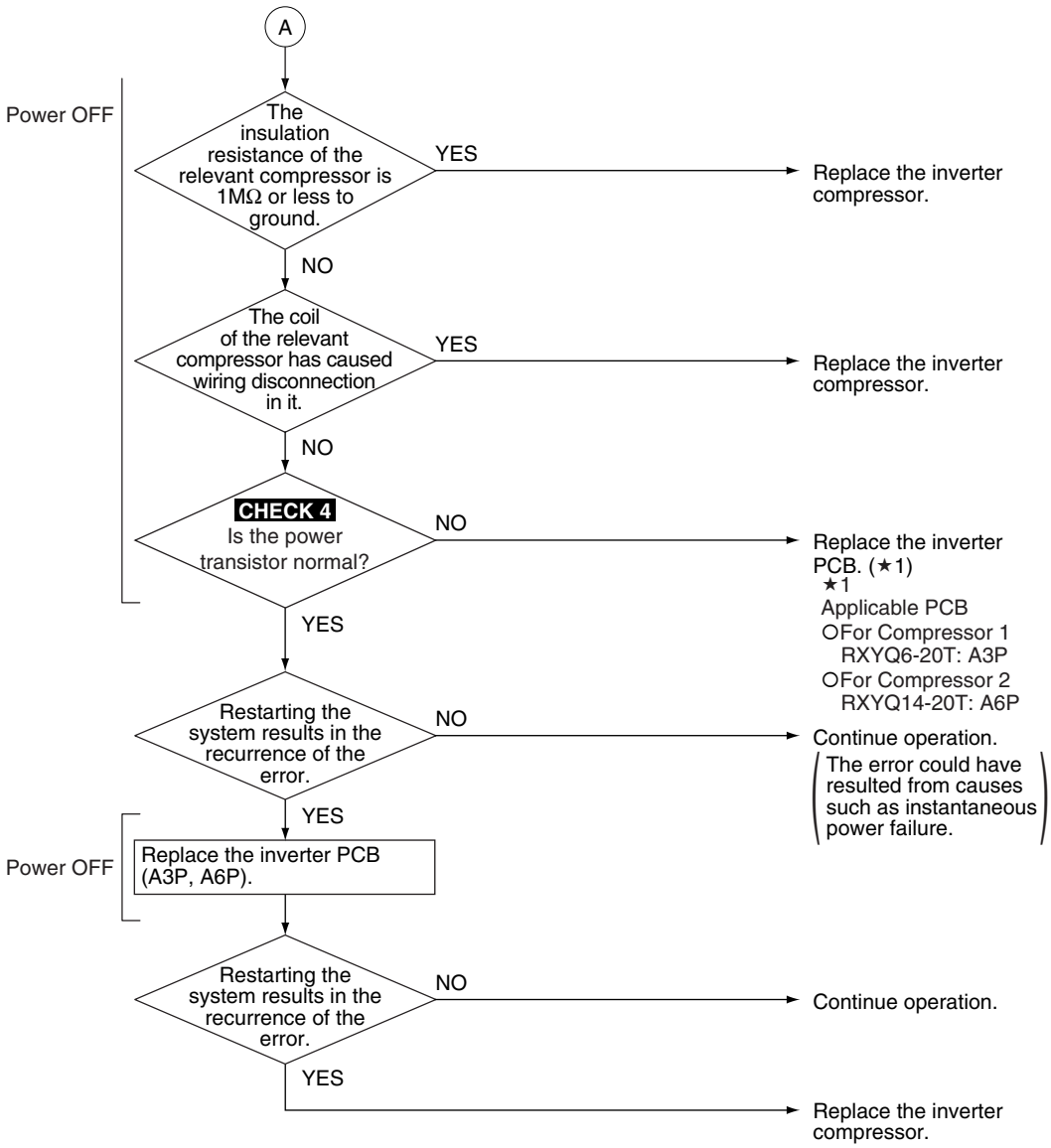

CHECK 4 Refer to P.220.

3.23 INV. Compressor Startup Abnormality

Error Code	L9
Applicable Models	RXYQ-T
Method of Error Detection	Detect error according to the signal waveform of compressor.
Error Decision Conditions	When compressor startup operation has not been completed.
Supposed Causes	■ The stop valve is not opened ■ Defective compressor ■ Error in wire connections to compressor ■ Large differential pressure before compressor startup ■ Defective inverter PCB

Troubleshooting

Caution Be sure to turn off the power switch before connecting or disconnecting connectors, or parts may be damaged.

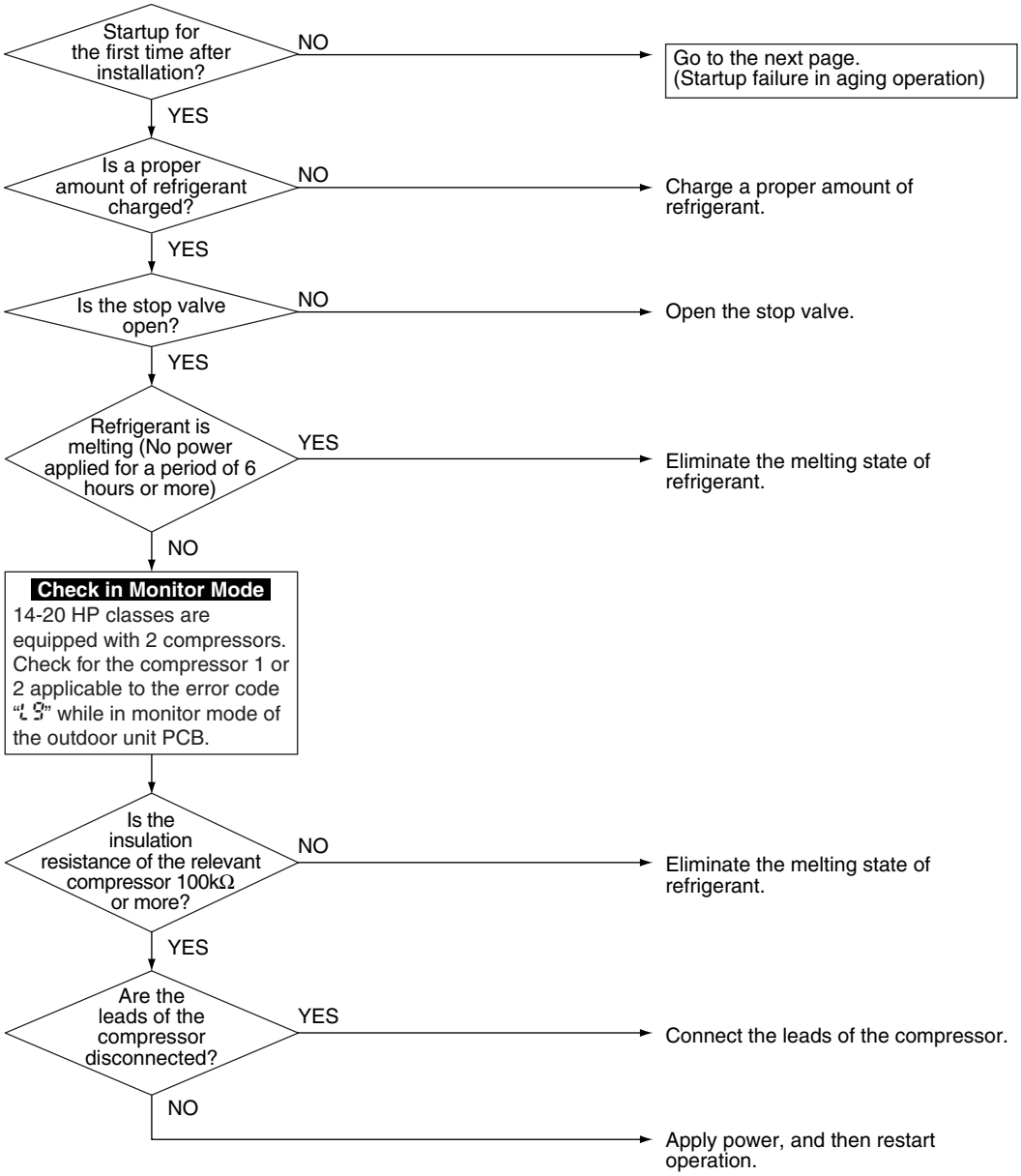

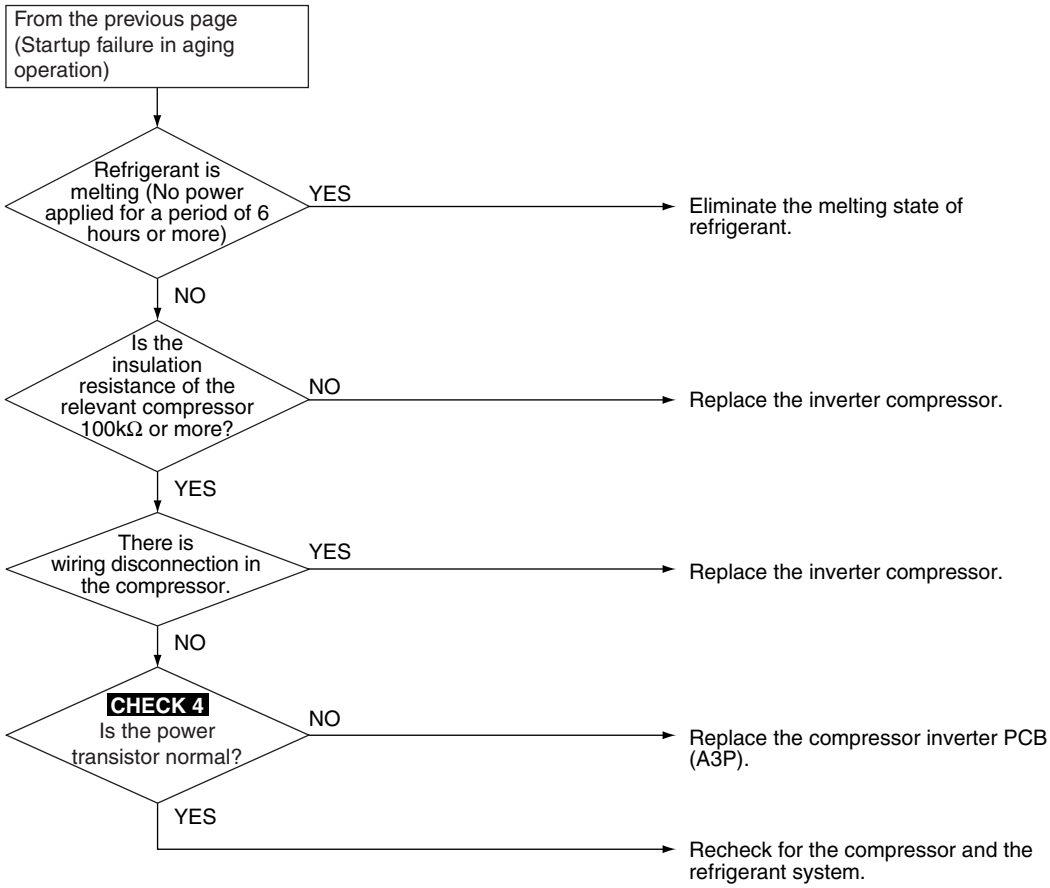

CHECK 4 Refer to P.220.

3.24 Transmission Error between Inverter and Control PCB

Error Code LC

Applicable Models RXYQ-T

Method of Error Detection Check for the transmission conditions between the inverter PCB and the control PCB using a micro-computer.

Error Decision Conditions When normal transmission is disabled for a given period of time or more.

Supposed Causes

- Defective connection between the inverter PCB and the control PCB
- Defective control PCB (transmission block)
- Defective noise filter
- External factors (e.g. noise)
- Defective inverter compressor
- Defective fan motor

Troubleshooting

Caution Be sure to turn off the power switch before connecting or disconnecting connectors, or parts may be damaged.

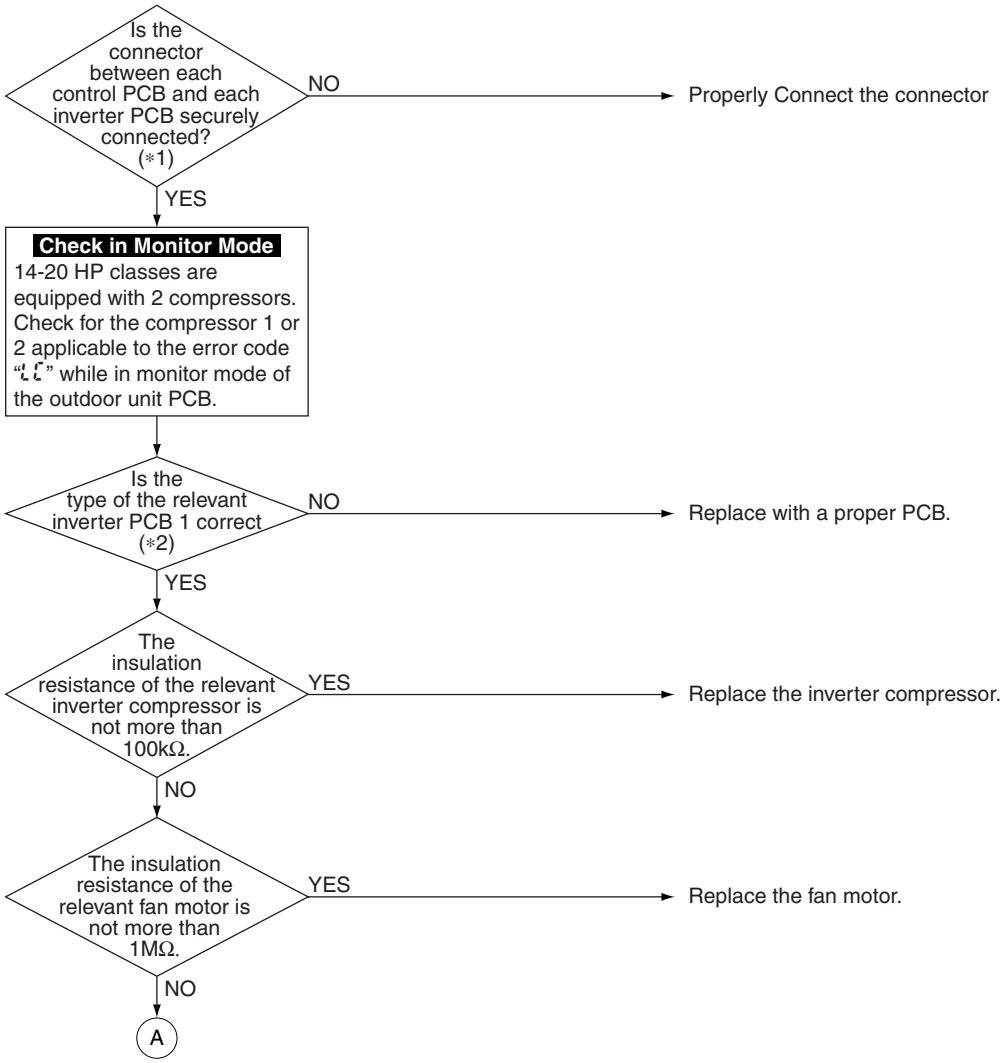

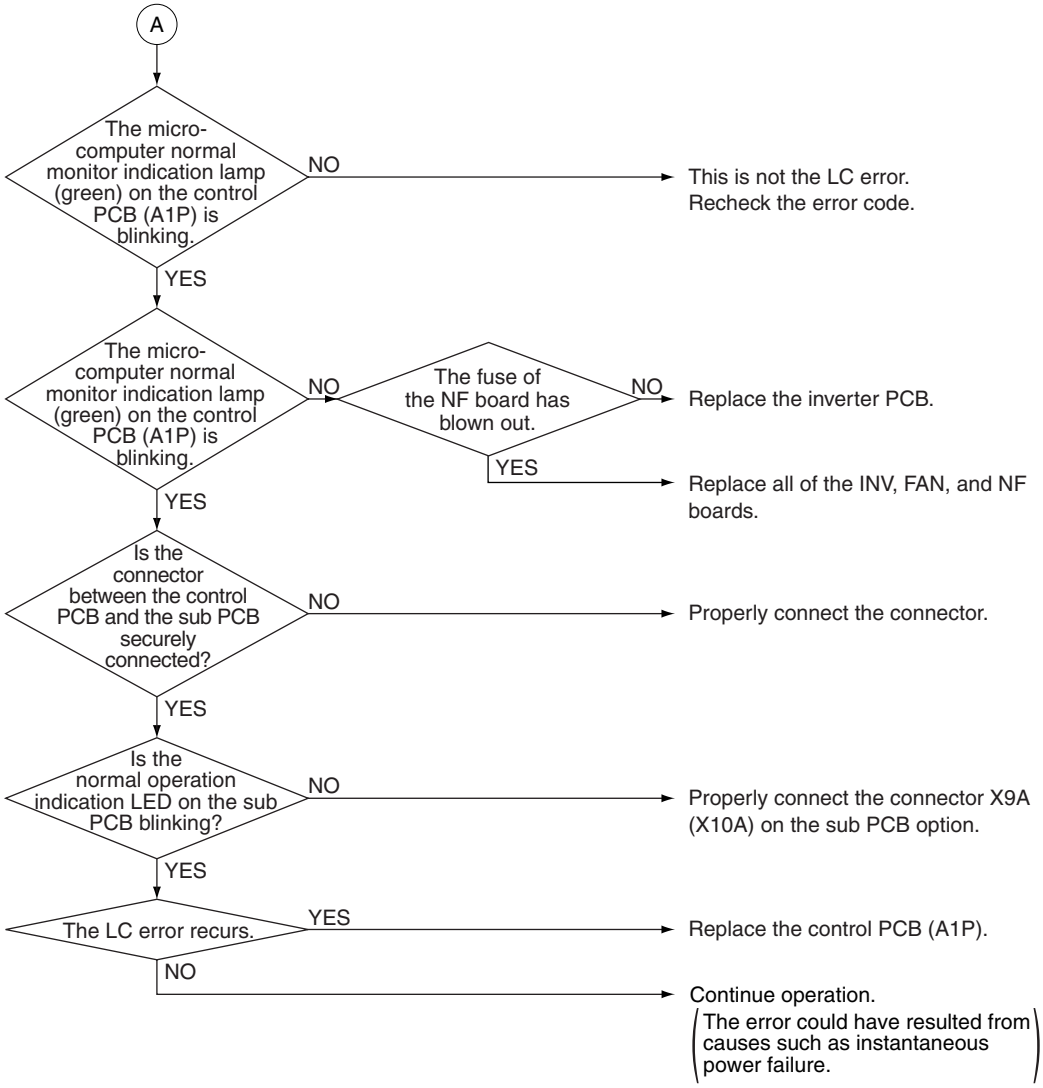

Note: ∗1. Connect and disconnect the connector once to ensure that it is securely connected.
∗2. List of types of inverter PCB:

Motor symbol	RXYQ6·8T	RXYQ10·12T	RXYQ14-18T	RXYQ20T
M1C	PC1227-1(A)	PC1116-1(B)	PC1230-1(A)	
M2C	—		PC1229-1(A)	PC1116-3(B)
M1F	PC13001-3(A)		PC13001-2(A)	
M2F	—		PC13001-1(A)	

3.25 Power Supply Voltage Imbalance

Error Code	P1
Applicable Models	RXYQ-T
Method of Error Detection	Detect voltage imbalance through PCB.
Error Decision Conditions	When power supply voltage imbalance exceeds approximately 12V. Error is not decided while the unit operation is continued. "P1" will be displayed by pressing the inspection button.
Supposed Causes	■ Open phase ■ Interphase voltage imbalance ■ Defective capacitor in the main circuit ■ Defective inverter PCB ■ Defective K1M, K2M (inverter board) ■ Defective wiring in the main circuit

Troubleshooting

Caution Be sure to turn off the power switch before connecting or disconnecting connectors, or parts may be damaged.

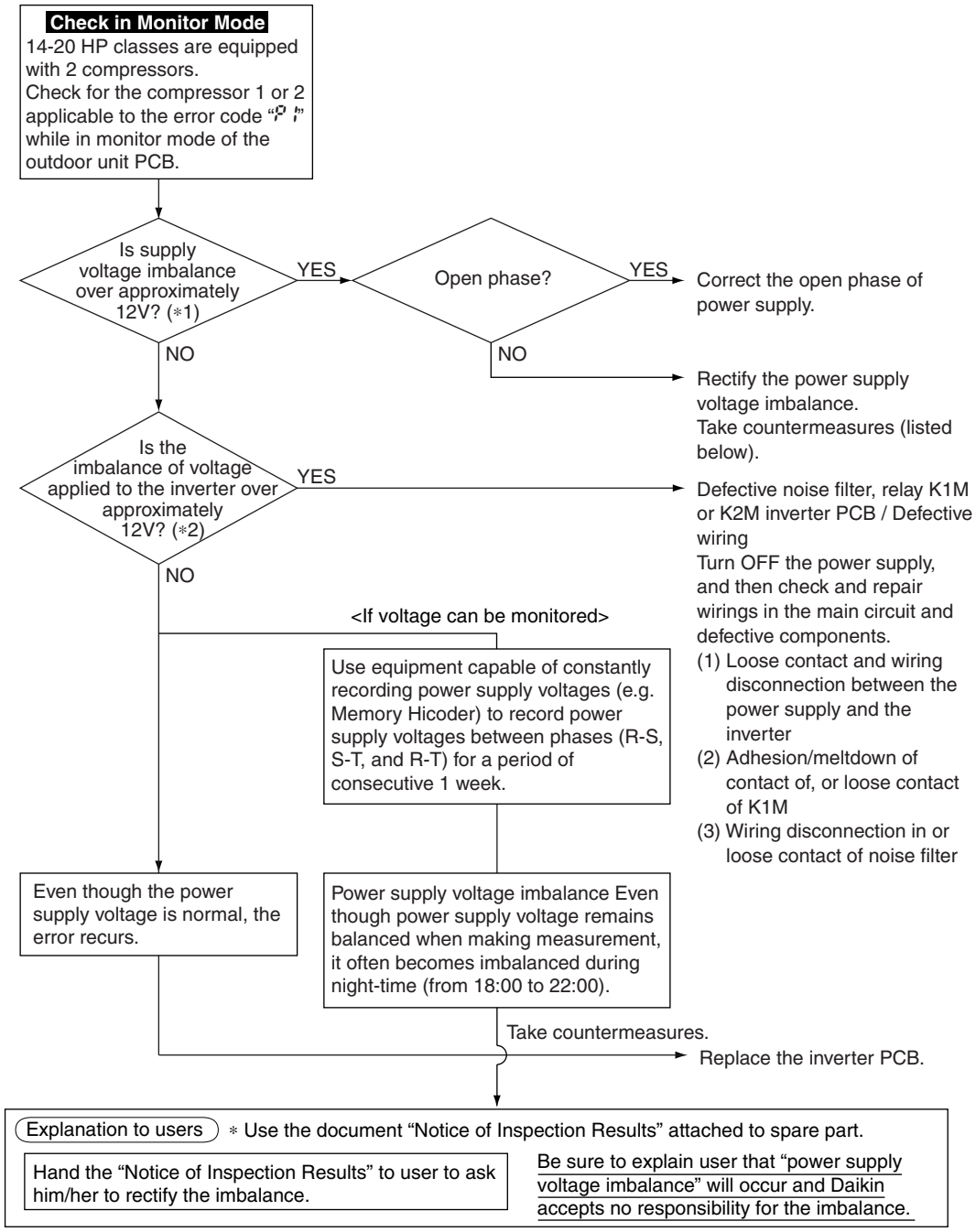

Note:
*1. Make measurement of voltage at the power supply terminal block (X1M).
*2. Make measurement of voltage at the L1, L2 and L3 terminals of diode module located on the inverter PCB during the compressor is in operation.

3.26 Reactor Temperature Abnormality

Error Code P3

Applicable Models RXYQ-T

Method of Error Detection Detect according to the value detected with the reactor surface thermistor.

Error Decision Conditions When the system is in operation and the thermistor causes wiring disconnection or short circuit in it.

Supposed Causes

- Defective connection of thermistor
- Defective reactor thermistor
- Defective inverter PCB

Troubleshooting

Caution Be sure to turn off the power switch before connecting or disconnecting connectors, or parts may be damaged.

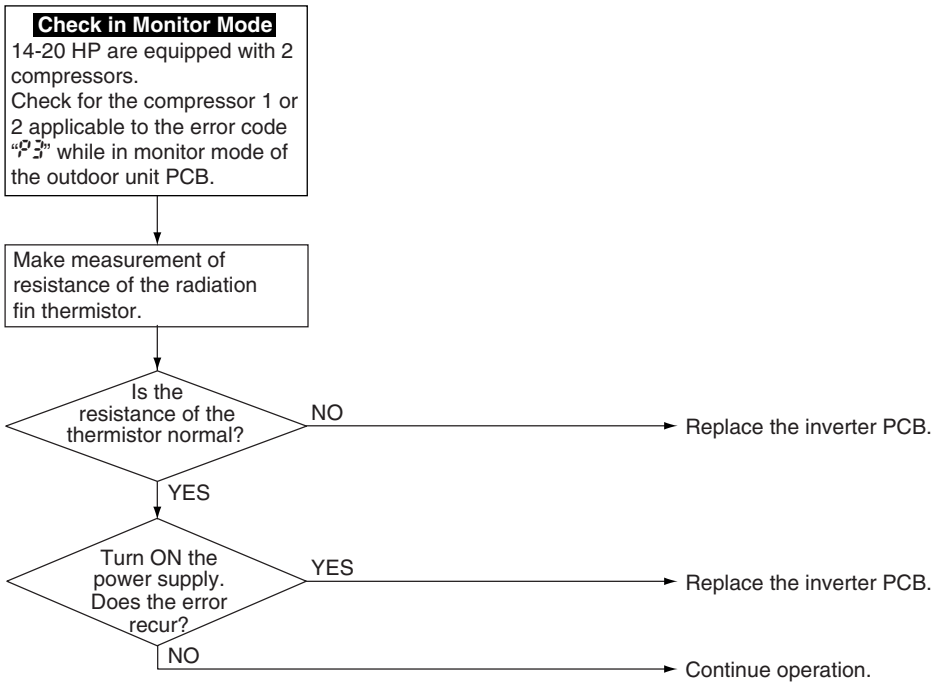

3.27 Inverter Radiation Fin Temperature Abnormality

Error Code P4

Applicable Models RXYQ-T

Method of Error Detection
Detect the resistance of the following thermistors during the compressor stops running:
① Radiation fin thermistor.
② Thermistor located in PCB circuit.
③ Heat sink thermistor.

Error Decision Conditions
When the resistance of the thermistor comes to a value equivalent to open or short circuit.

Error is not decided while the unit operation is continued.
"P4" will be displayed by pressing the inspection button.

Supposed Causes
- Defective radiation fin temperature thermistor
- Defective inverter PCB
- Defective INV. compressor
- Defective fan motor

Troubleshooting

Caution Be sure to turn off the power switch before connecting or disconnecting connectors, or parts may be damaged.

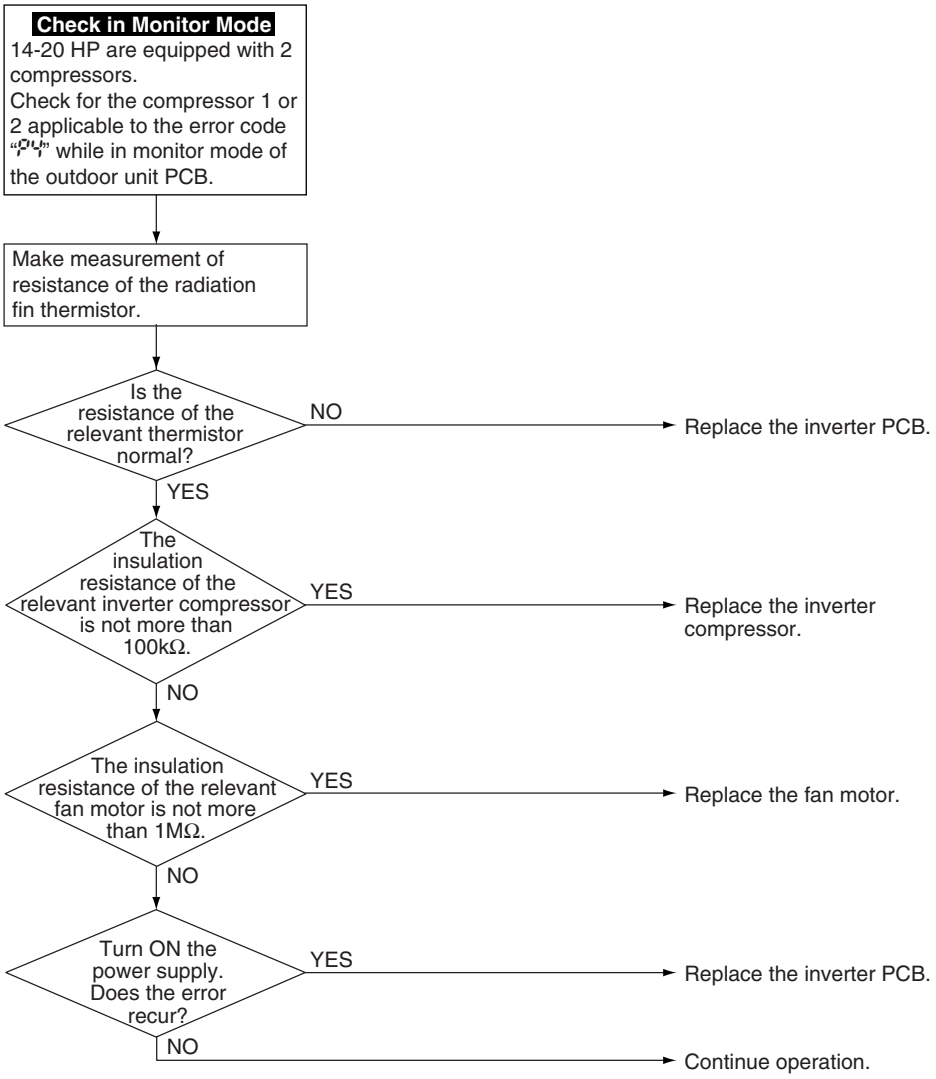

3.28 Field Setting after Replacing Outdoor Unit Main PCB Abnormality or Combination of PCB Abnormality

Error Code PJ

Applicable Models RXYQ-T

Method of Error Detection This error is detected according to communications with the inverter PCB.

Error Decision Conditions Make judgement according to communication data on whether or not the type of the inverter PCB is correct.

Supposed Causes
- Mismatching of type of PCB
- Improper (or no) field setting after replacing outdoor unit main PCB

Troubleshooting

Caution Be sure to turn off the power switch before connecting or disconnecting connectors, or parts may be damaged.

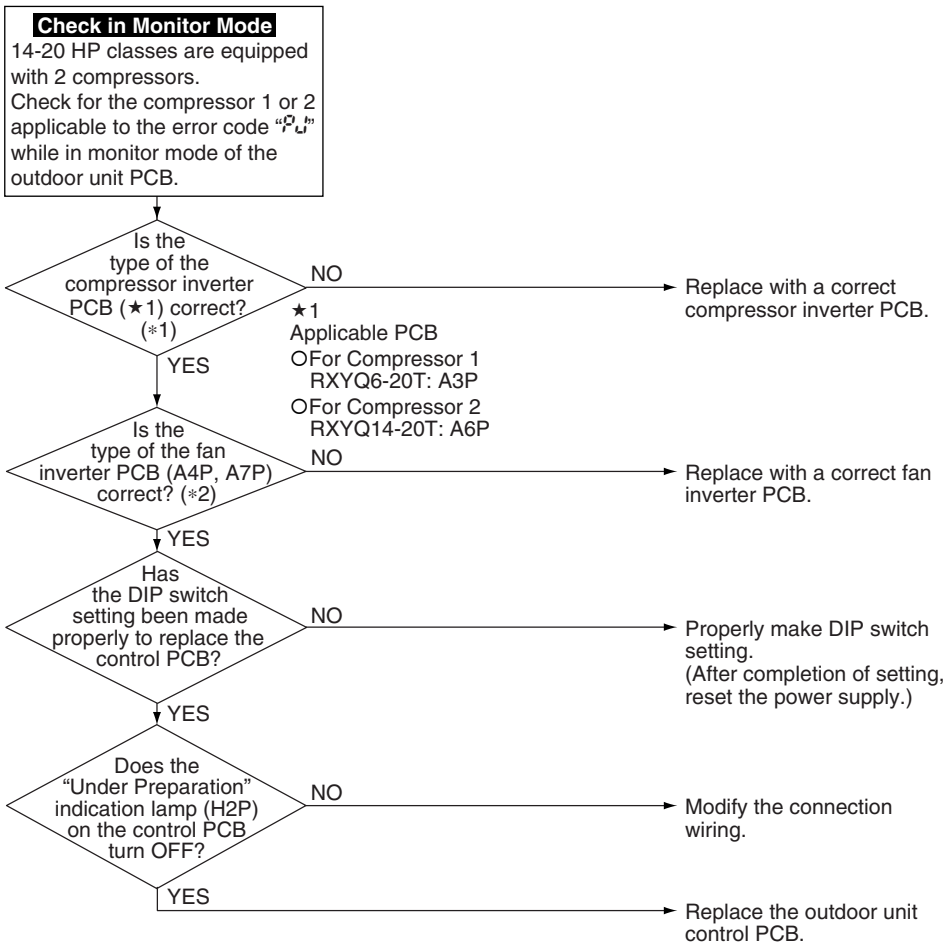

Note: ∗1. ∗2. INV. PCB and Fan PCB

Motor symbol	RXYQ6·8T	RXYQ10·12T	RXYQ14-18T	RXYQ20T
M1C	PC1227-1(A)	PC1116-1(B)	PC1230-1(A)	
M2C	—		PC1229-1(A)	PC1116-3(B)
M1F	PC13001-3(A)		PC13001-2(A)	
M2F	—		PC13001-1(A)	

3.29 Refrigerant Shortage

Error Code U0

Applicable Models RXYQ-T

Method of Error Detection Detect refrigerant shortage according to a low pressure level or a difference in heat exchanging temperature from the suction pipe.

Error Decision Conditions Low pressure becomes 0.1 MPa or less.
∗ Error is not determined. The unit continues the operation.

Supposed Causes
- Refrigerant shortage and refrigerant clogging (wrong piping)
- Defective thermistor
- Defective low pressure sensor
- Defective outdoor unit main PCB

Troubleshooting

Caution Be sure to turn off the power switch before connecting or disconnecting connectors, or parts may be damaged.

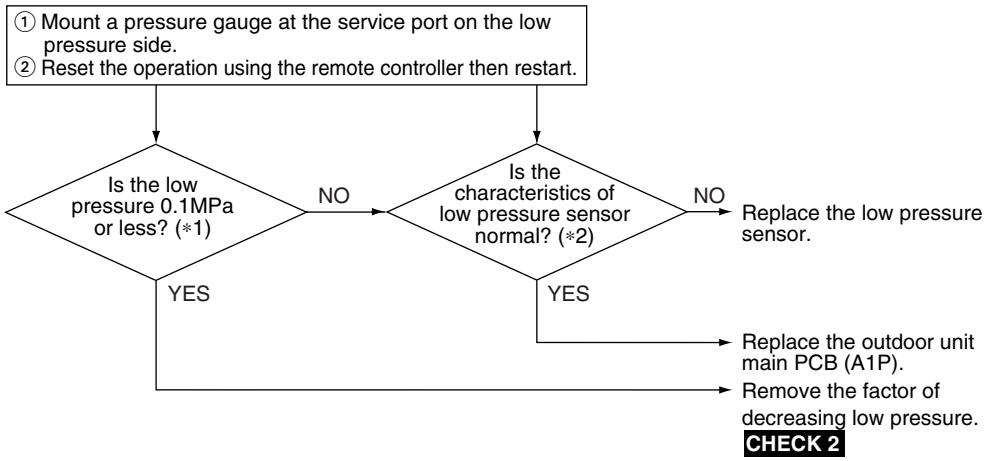

Note:
∗1. Check the low pressure value by using pressure gauge in operation.
∗2. Compare the actual measurement value by pressure sensor with the value by the pressure gauge.
(To gain actual measurement value by pressure sensor, measure the voltage at the connector [between (2)-(3)] and then convert the value into pressure. CHECK 12)

CHECK 2 Refer to P.218.

CHECK 12 Refer to P.224.

3.30 Reverse Phase, Open Phase

Error Code

U1

Applicable Models

RXYQ-T

Method of Error Detection

The phase of each phase are detected by reverse phase detection circuit and right phase or reverse phase are judged.

Error Decision Conditions

When a power supply is reverse phase, or T phase is open phase.

Supposed Causes

- Power supply reverse phase
- T phase open phase
- Defective outdoor unit PCB (A1P)

Troubleshooting

Caution Be sure to turn off the power switch before connecting or disconnecting connectors, or parts may be damaged.

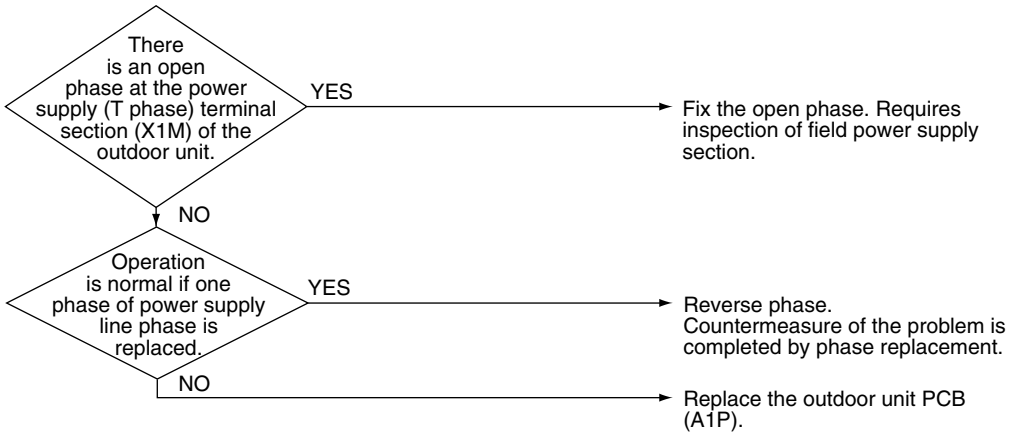

3.31 Power Supply Insufficient or Instantaneous Abnormality

Error Code U2

Applicable Models RXYQ-T

Method of Error Detection Detect the voltage of capacitor of the main circuit in the inverter PCB.

Error Decision Conditions When the voltage in the DC circuit (between diode module and power module) falls below 380VDC.

Supposed Causes

- Abnormal power supply voltage
- Instantaneous power failure
- Open phase
- Defective inverter PCB
- Defective control PCB
- Defective compressor
- Defective main circuit wiring
- Defective fan motor
- Defective connection of signal cable

Troubleshooting

Caution Be sure to turn off the power switch before connecting or disconnecting connectors, or parts may be damaged.

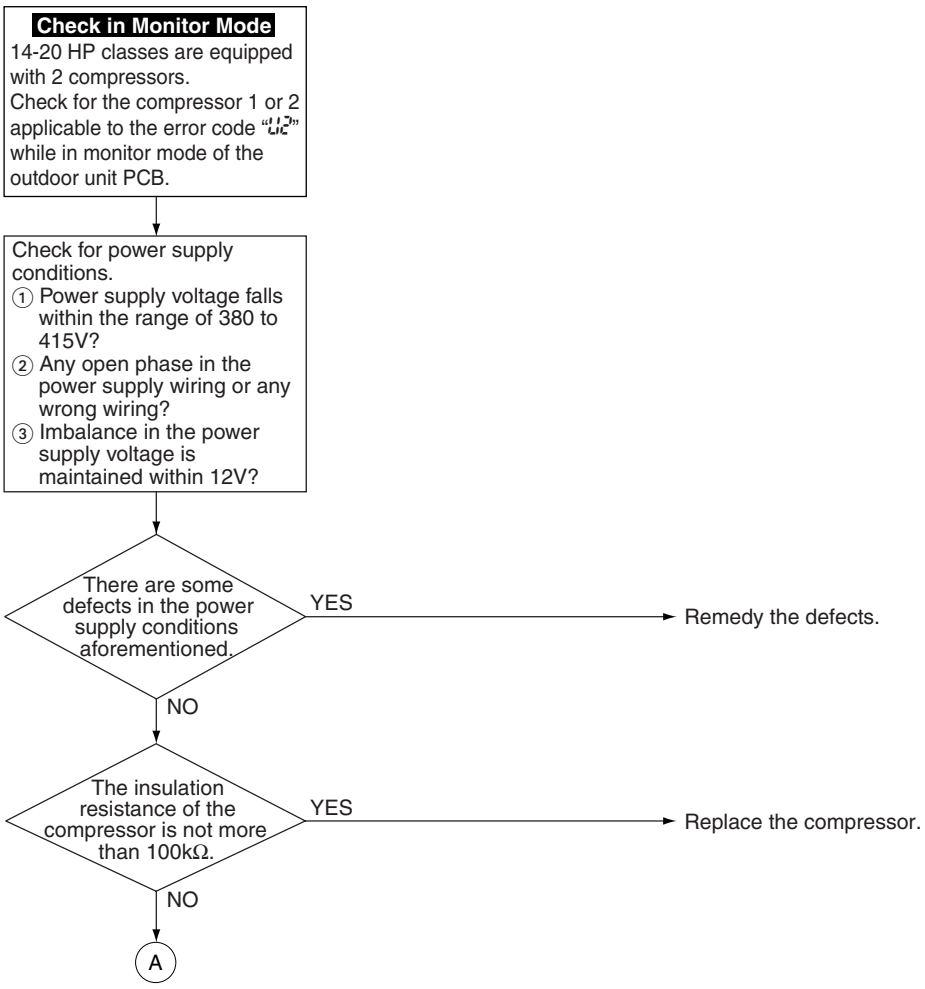

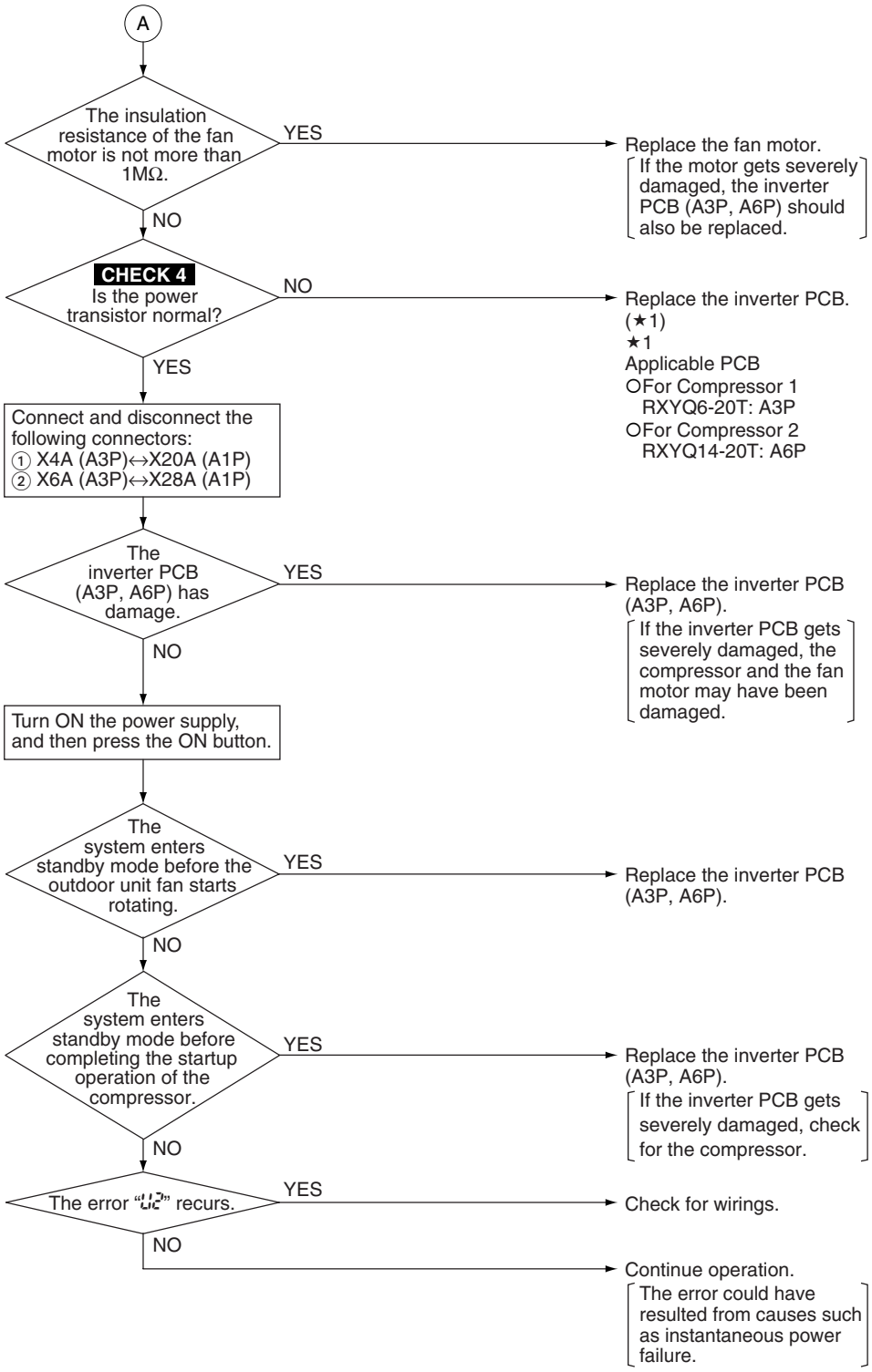

CHECK 4 Refer to P.220.

3.32 Check Operation is not Executed

Error Code U3

Applicable Models RXYQ-T

Method of Error Detection Check operation is executed or not executed

Error Decision Conditions Error is decided when the unit starts operation without check operation.

Supposed Causes

- Check operation is not executed.

Troubleshooting

Caution Be sure to turn off the power switch before connecting or disconnecting connectors, or parts may be damaged.

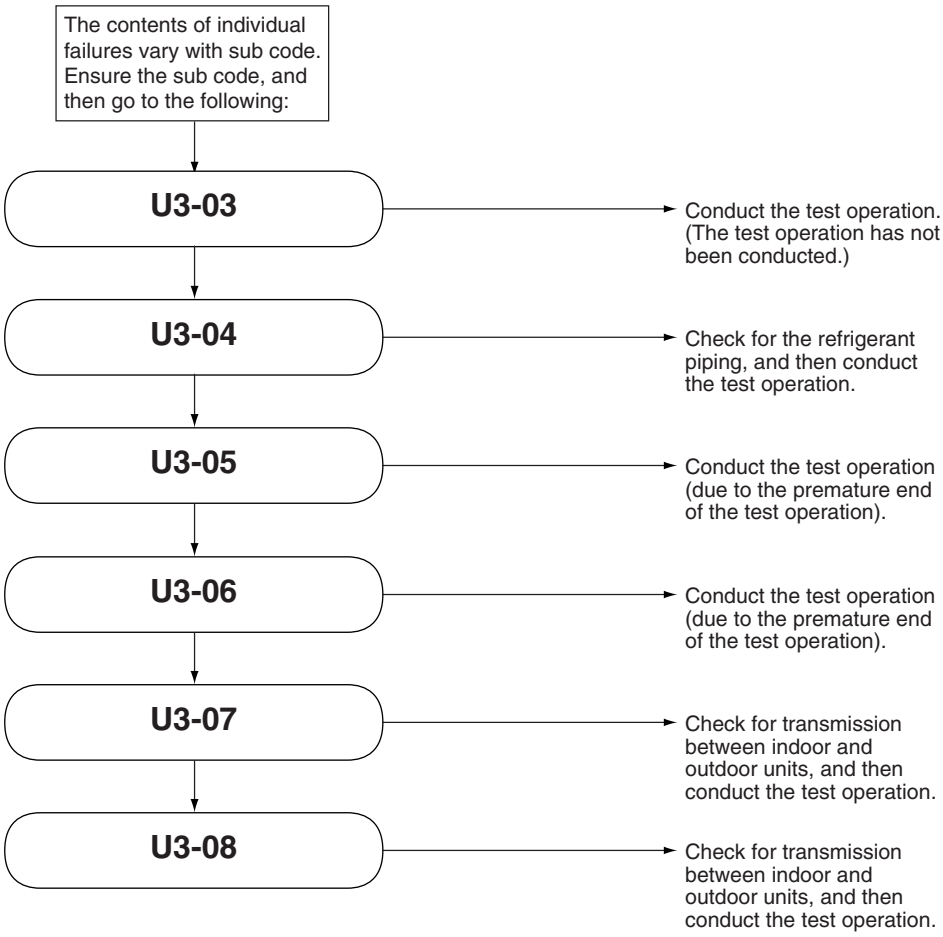

3.33 Transmission Error between Indoor Units and Outdoor Units

Error Code	U4
Applicable Models	All indoor models RXYQ-T
Method of Error Detection	Micro-computer checks if transmission between indoor and outdoor units is normal.
Error Decision Conditions	When transmission is not carried out normally for a certain amount of time
Supposed Causes	■ Short circuit in indoor-outdoor or outdoor-outdoor transmission wiring (F1 / F2), or wrong wiring ■ Outdoor unit power supply is OFF ■ System address does not match ■ Defective indoor unit PCB ■ Defective outdoor unit PCB

Troubleshooting

Caution Be sure to turn off the power switch before connecting or disconnecting connectors, or parts may be damaged.

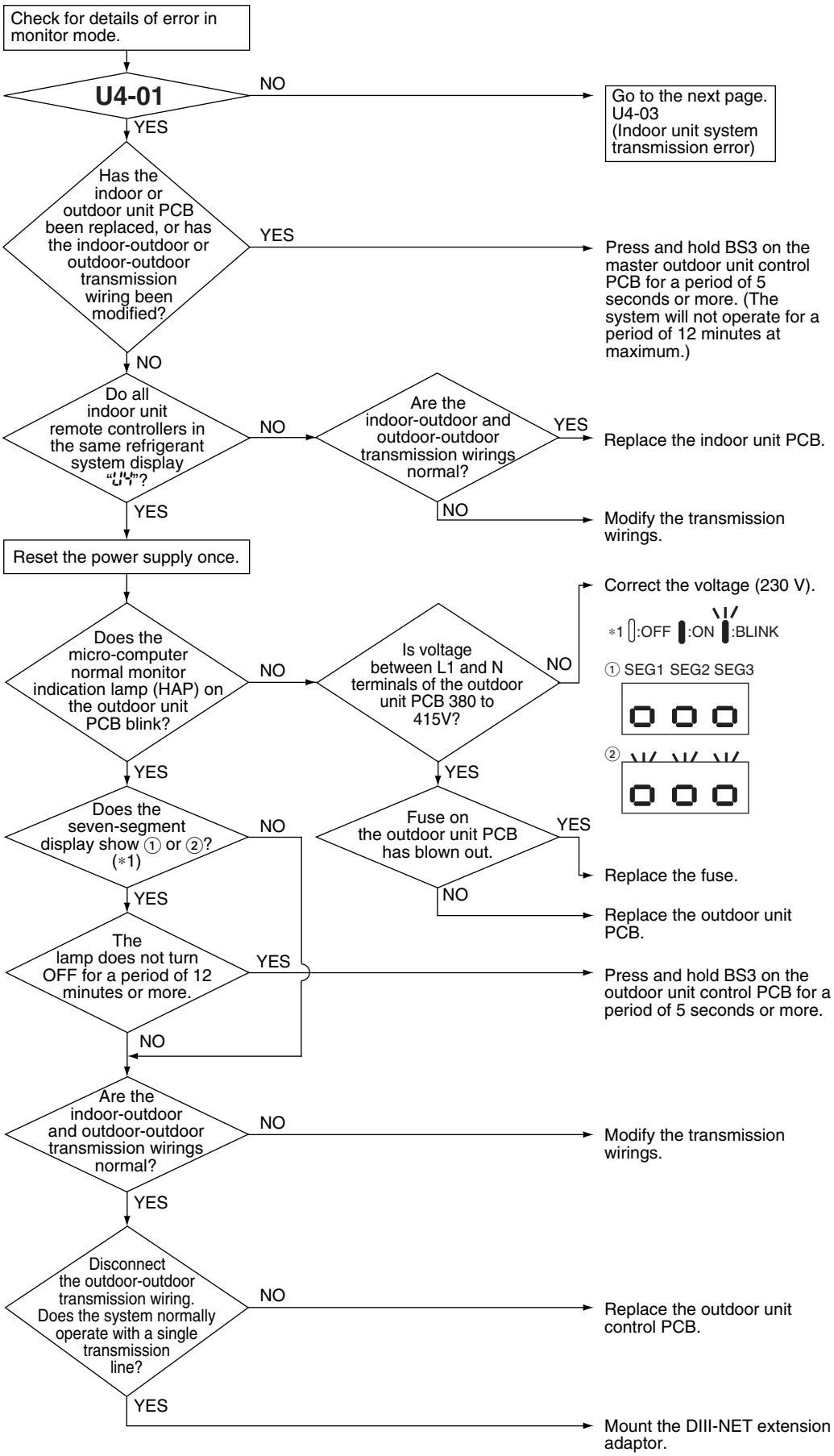

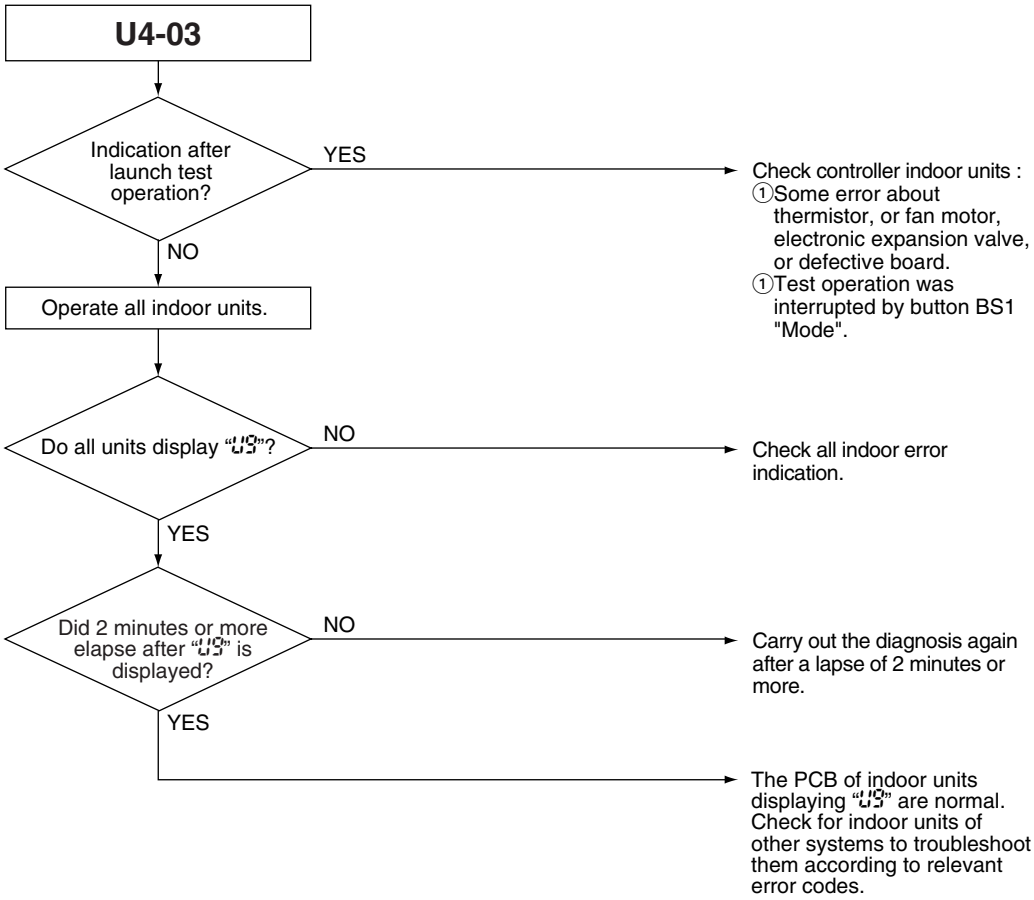
U4-03
Indication after launch test operation?
YES
Check controller indoor units :
①Some error about thermistor, or fan motor, electronic expansion valve, or defective board.
①Test operation was interrupted by button BS1 "Mode".
NO
Operate all indoor units.
Do all units display "U9"?
NO
Check all indoor error indication.
YES
Did 2 minutes or more elapse after "U9" is displayed?
NO
Carry out the diagnosis again after a lapse of 2 minutes or more.
YES
The PCB of indoor units displaying "U9" are normal. Check for indoor units of other systems to troubleshoot them according to relevant error codes.

3.34 Transmission Error between Remote Controller and Indoor Unit

Error Code

U5

Applicable Models

All indoor models

Method of Error Detection

Micro-computer checks if transmission between indoor unit and remote controller is normal.

Error Decision Conditions

When transmission is not carried out normally for a certain amount of time

Supposed Causes

- Transmission error between indoor unit and remote controller
- Connection of 2 main remote controllers (when using 2 remote controllers)
- Defective indoor unit PCB
- Defective remote controller PCB
- Transmission error caused by noise

Troubleshooting

Caution Be sure to turn off the power switch before connecting or disconnecting connectors, or parts may be damaged.

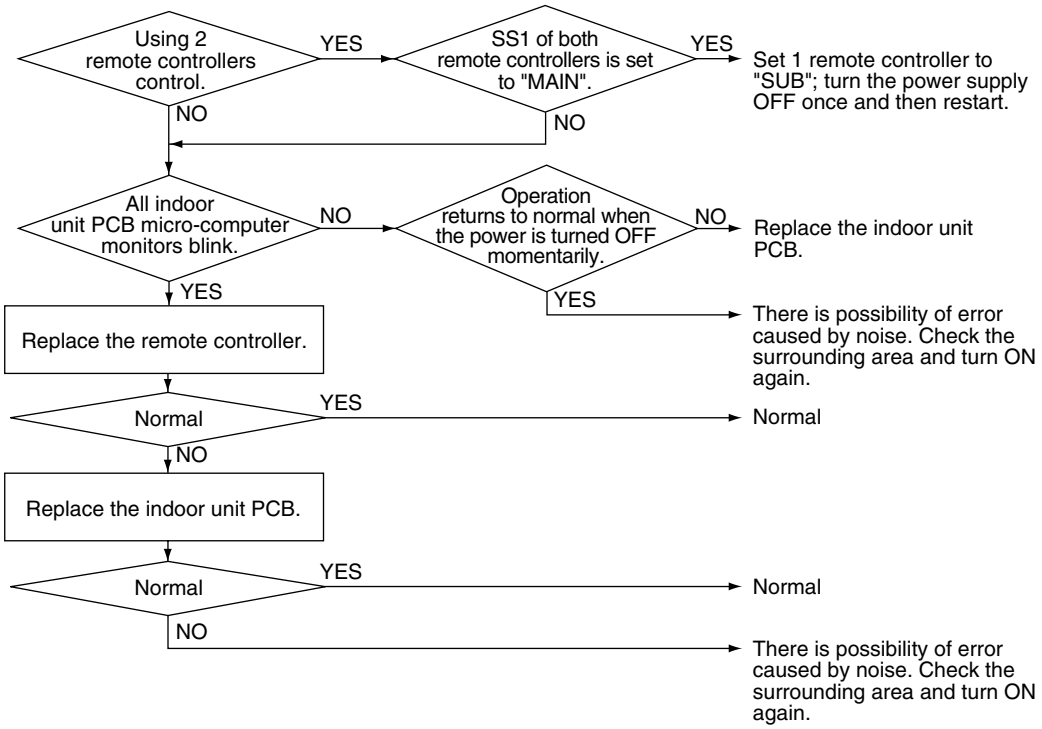

3.35 Transmission Error between Outdoor Units

Error Code	U7
Applicable Models	RXYQ-T
Method of Error Detection	Micro-computer checks if transmission between outdoor units is normal.
Error Decision Conditions	When transmission is not carried out normally for a certain amount of time
Supposed Causes	■ Connection error of transmission wirings between outdoor unit and external control adaptor for outdoor unit ■ Connection error of transmission wirings between outdoor units ■ Cool/Heat selection setting error ■ Cool/Heat unified address setting error (functional unit, external control adaptor for outdoor unit) ■ Defective outdoor unit PCB ■ Defective external control adaptor for outdoor unit

Troubleshooting

Caution Be sure to turn off the power switch before connecting or disconnecting connectors, or parts may be damaged.

Ensure the sub code or the lamp display of monitor mode, and then go to the following:

U7-01
Error code Sub code

Go to Diagnosis Flowchart-1. (Transmission error when the external control adaptor is mounted)

U7-02
Error code Sub code

Go to Diagnosis Flowchart-2. (Transmission error when the external control adaptor is mounted)

U7-03
Error code Sub code

Go to Diagnosis Flowchart-3. (Transmission error between master and slave 1)

U7-04
Error code Sub code

Go to Diagnosis Flowchart-4. (Transmission error between master and slave 2)

U7-05
Error code Sub code

Go to Diagnosis Flowchart-5. (Multi system error)

U7-06
Error code Sub code

Go to Diagnosis Flowchart-6. (Manual address setting error for slave 1, 2)

U7-07
Error code Sub code

Go to Diagnosis Flowchart-7. (Connection 4 or more outdoor units to the same system)

U7-11
Error code Sub code

Go to Diagnosis Flowchart-8. (Connection of excess indoor units for test operation)

Diagnosis Flow-1

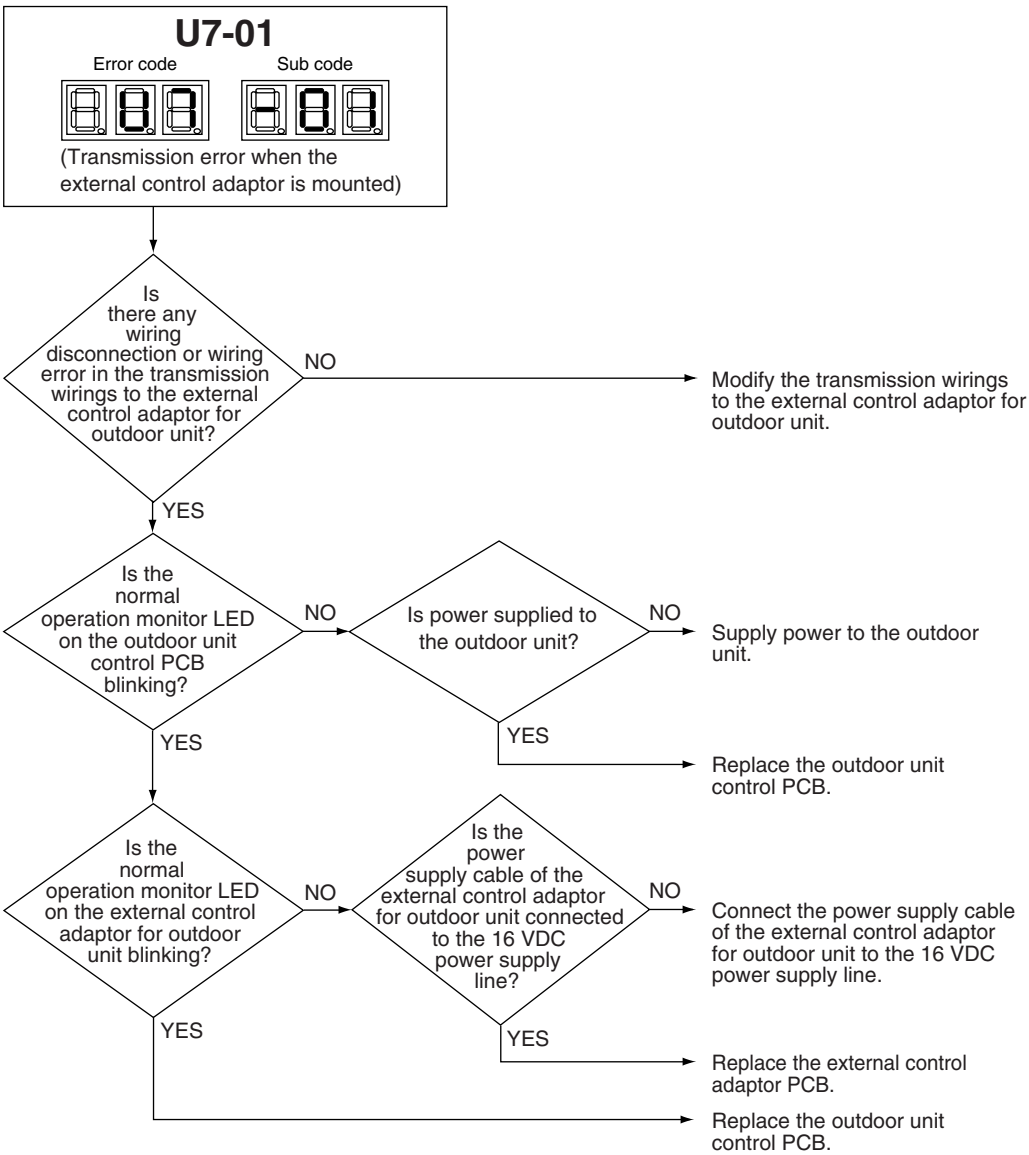

Diagnosis Flow-2

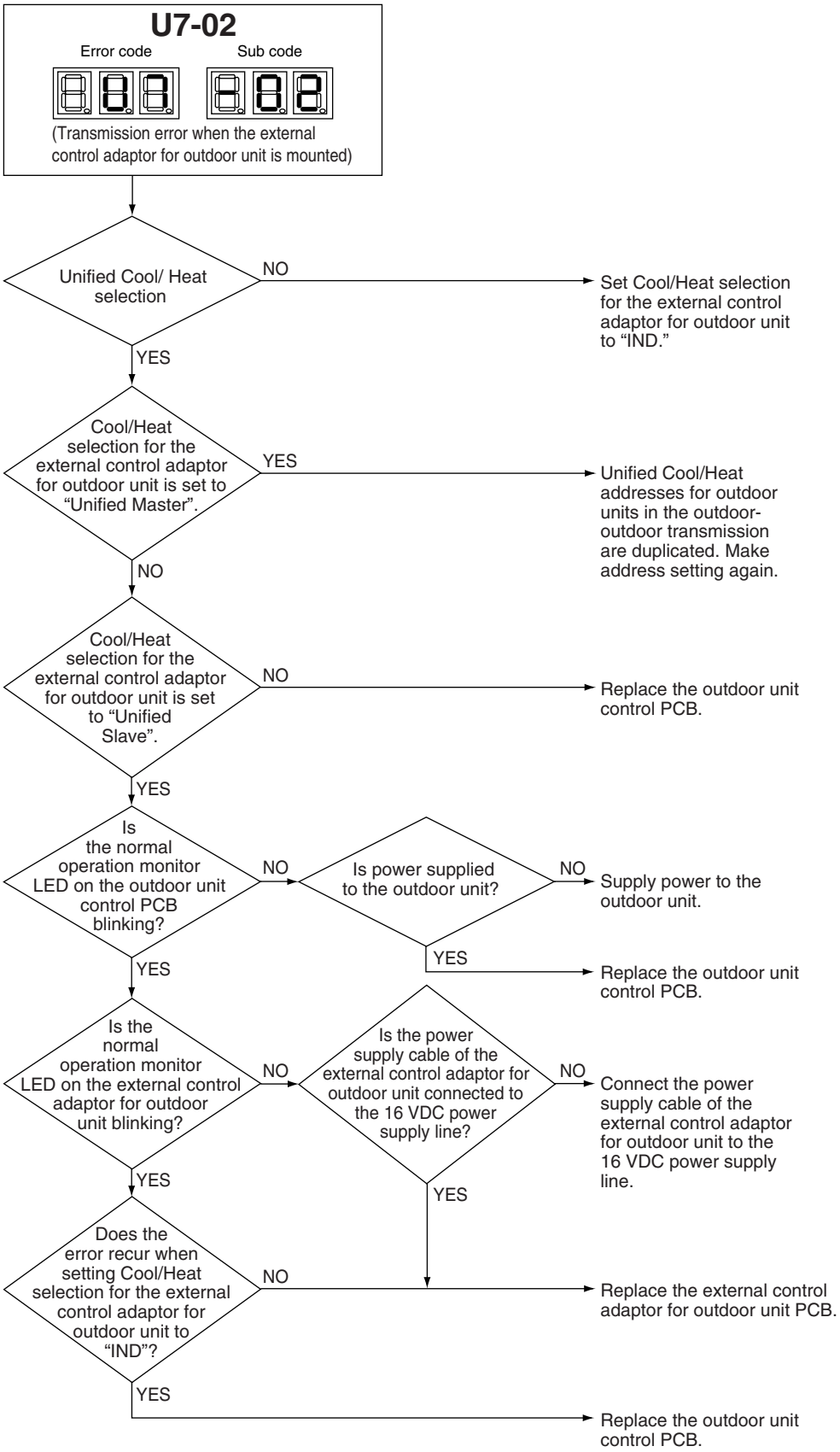

Diagnosis Flow-3

U7-03

Error code Sub code

(Transmission error between master and slave 1)

The multi transmission wirings to multi slave 1 have caused wiring disconnection in them or are being disconnected.

NO → Replace the outdoor unit control PCB for multi slave 1.

YES → Modify the outdoor unit multi transmission wirings, and then reset the power supply.

Diagnosis Flow-4

U7-04

Error code Sub code

(Transmission error between master and slave 2)

The multi transmission wirings to multi slave 2 have caused wiring disconnection in them or are being disconnected.

NO → Replace the outdoor unit control PCB for multi slave 2.

YES → Modify the outdoor unit multi transmission wirings, and then reset the power supply.

Diagnosis Flow-5

U7-05

Error code Sub code

(Multi system error)

Is the model of outdoor unit RXYQ6-20T?

NO → Replace the outdoor unit control PCB.

YES → Disconnect the outdoor unit multi transmission wirings, and then reset the power supply.

Diagnosis Flow-6

U7-06

Error code Sub code

(Manual address setting error for slave 1, 2)

One of outdoor unit multi transmission wirings has caused wiring disconnection in it or been disconnected.

NO → Replace the outdoor unit control PCB.

YES → Modify the outdoor unit multi transmission wirings, and then reset the power supply.

Diagnosis Flow-7

U7-07

Error code Sub code

(Connection 4 or more outdoor units to the same system)

4 or more outdoor units are connected using the outdoor unit multi transmission wirings.

NO → Replace the outdoor unit control PCB.

YES → Modify the outdoor unit multi transmission wirings, and then reset the power supply.

Diagnosis Flow-8

U7-11

Error code Sub code

(Connection of excess indoor units for test operation)

There is an error in the connection of indoor-outdoor, indoor-indoor, and outdoor multi transmission wirings.

YES → Rectify the error in the connection of transmission wirings, and then reset the power supply.

NO

The capacity to connect indoor units falls within the specified range.

NO → Check the capacity to connect indoor units.

YES → Replace the outdoor unit PCB (A1P).

3.36 Transmission Error between Main and Sub Remote Controllers

Error Code

U8

Applicable Models

All indoor models

Method of Error Detection

In case of controlling with 2 remote controller, check the system using micro-computer if signal transmission between indoor unit and remote controller (main and sub remote controller) is normal.

Error Decision Conditions

When transmission is not carried out normally for a certain amount of time.

Supposed Causes

- Transmission error between main and sub remote controller
- Connection between sub remote controllers
- Defective remote controller PCB

Troubleshooting

Caution Be sure to turn off the power switch before connecting or disconnecting connectors, or parts may be damaged.

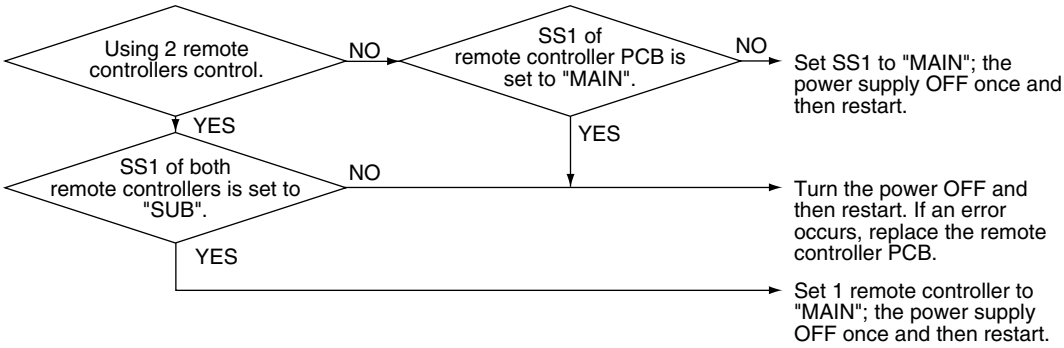

3.37 Transmission Error between Indoor and Outdoor Units in the Same System

Error Code

U9

Applicable Models

All indoor models
RXYQ-T

Method of Error Detection

Detect the error signal for the other indoor unit within the circuit by outdoor unit PCB.

Error Decision Conditions

When the error decision is made on any other indoor unit within the system concerned

Supposed Causes

- Transmission error between other indoor and outdoor units
- Defective electronic expansion valve of other indoor unit
- Defective indoor unit PCB of other indoor unit
- Improper connection of transmission wiring between indoor and outdoor unit

Troubleshooting

Caution Be sure to turn off the power switch before connecting or disconnecting connectors, or parts may be damaged.

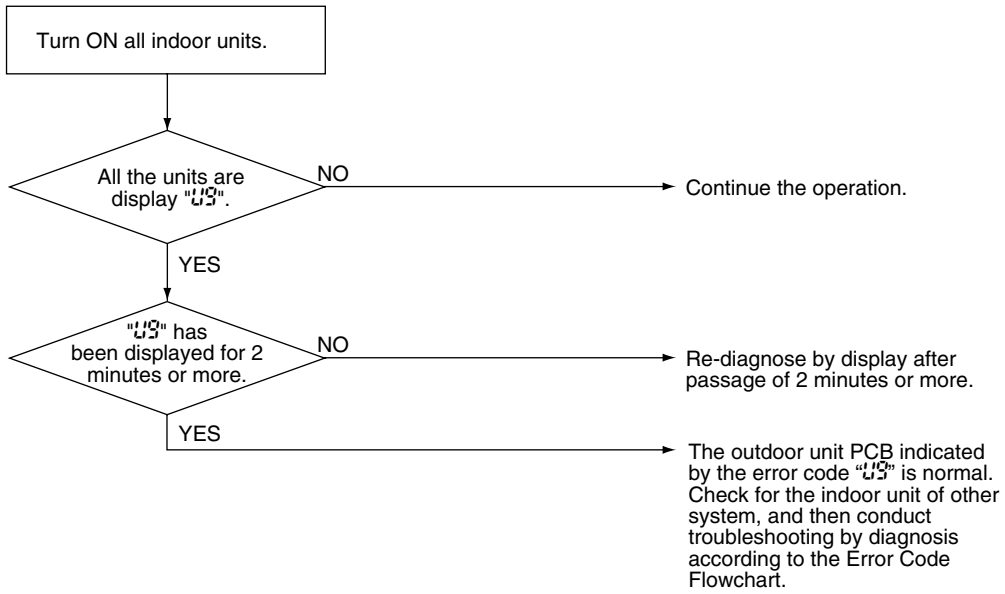

3.38 Improper Combination of Indoor and Outdoor Units, Indoor Units and Remote Controller

Error Code UA

Applicable Models
All indoor models
RXYQ-T

Method of Error Detection
A difference occurs in data by the type of refrigerant between indoor and outdoor units.
The number of indoor units connected is out of the allowable range.

Error Decision Conditions
The error decision is made as soon as either of the abnormalities aforementioned is detected.

Supposed Causes
- Excess of connected indoor units
- Defective outdoor unit PCB
- Mismatch of the refrigerant type of indoor and outdoor unit.
- Setting of outdoor unit PCB was not carried out after replacing to spare PCB.

Troubleshooting

Caution Be sure to turn off the power switch before connecting or disconnecting connectors, or parts may be damaged.

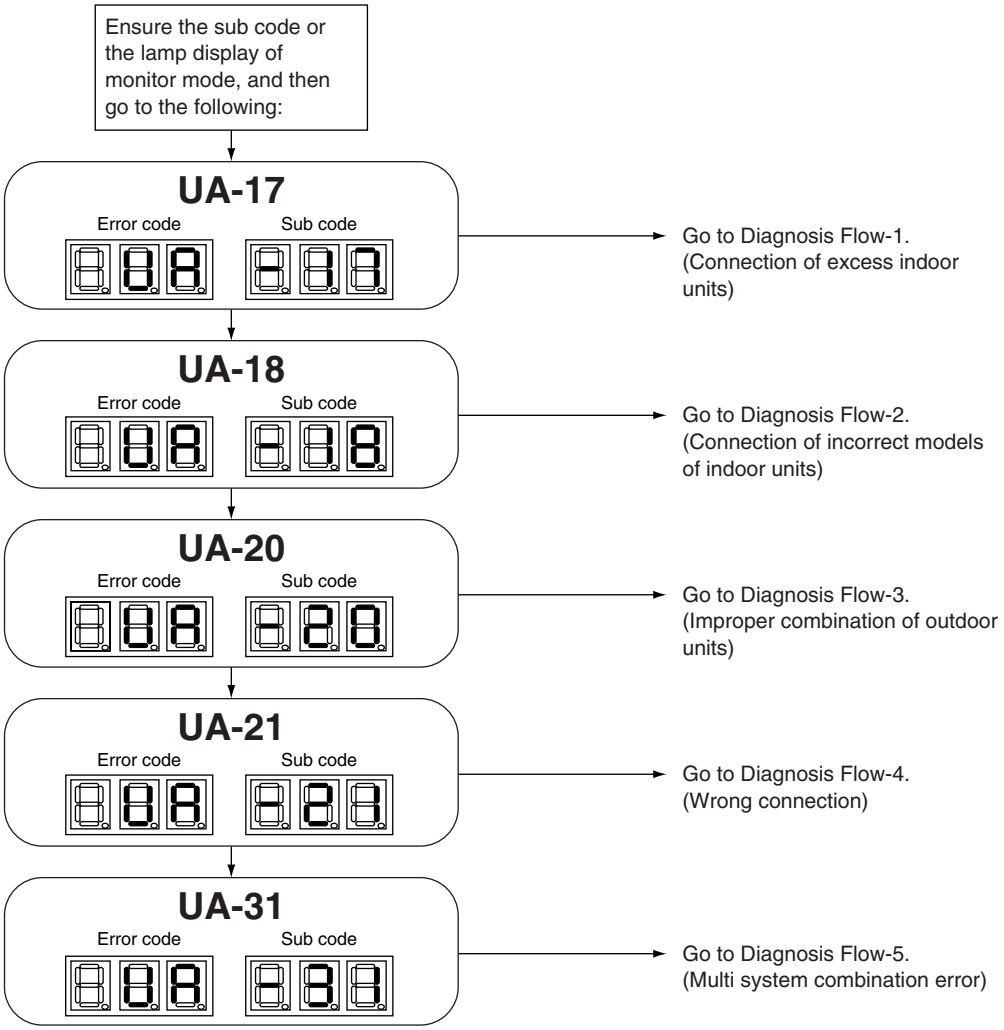

Diagnosis Flow-1

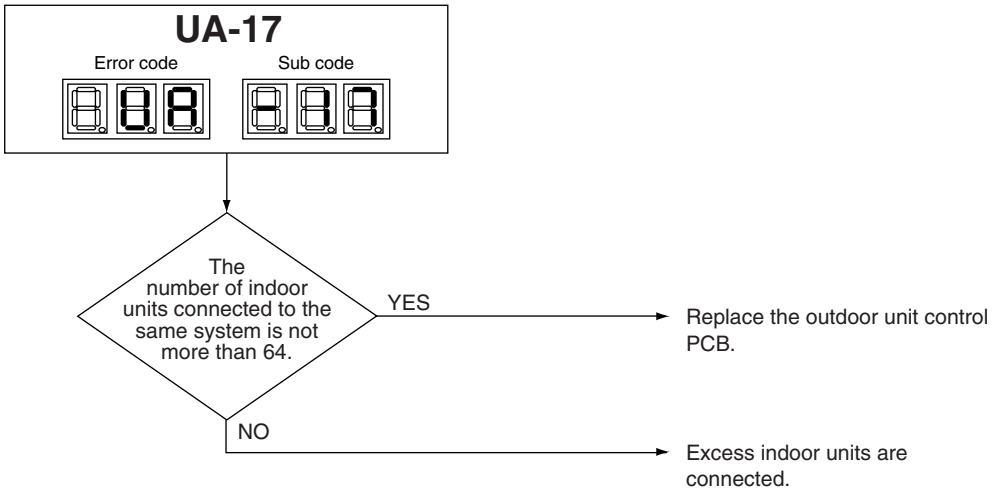

Diagnosis Flow-2

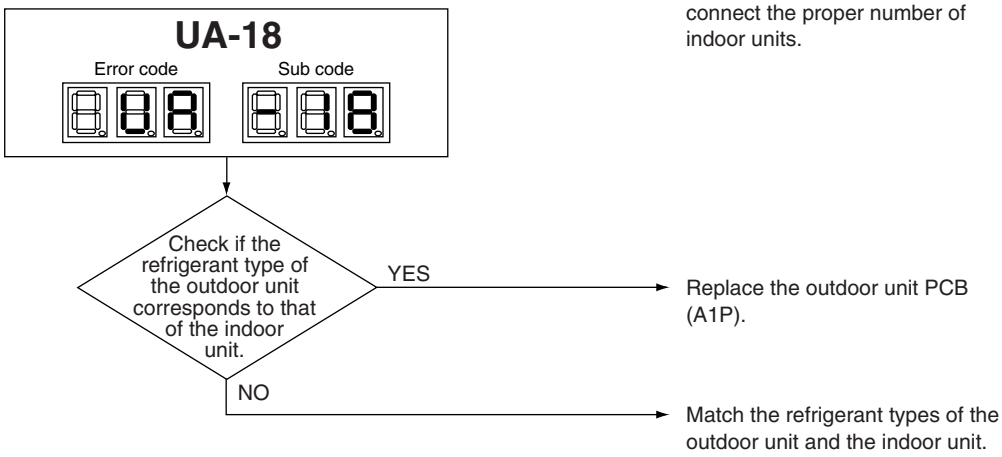

Diagnosis Flow-3

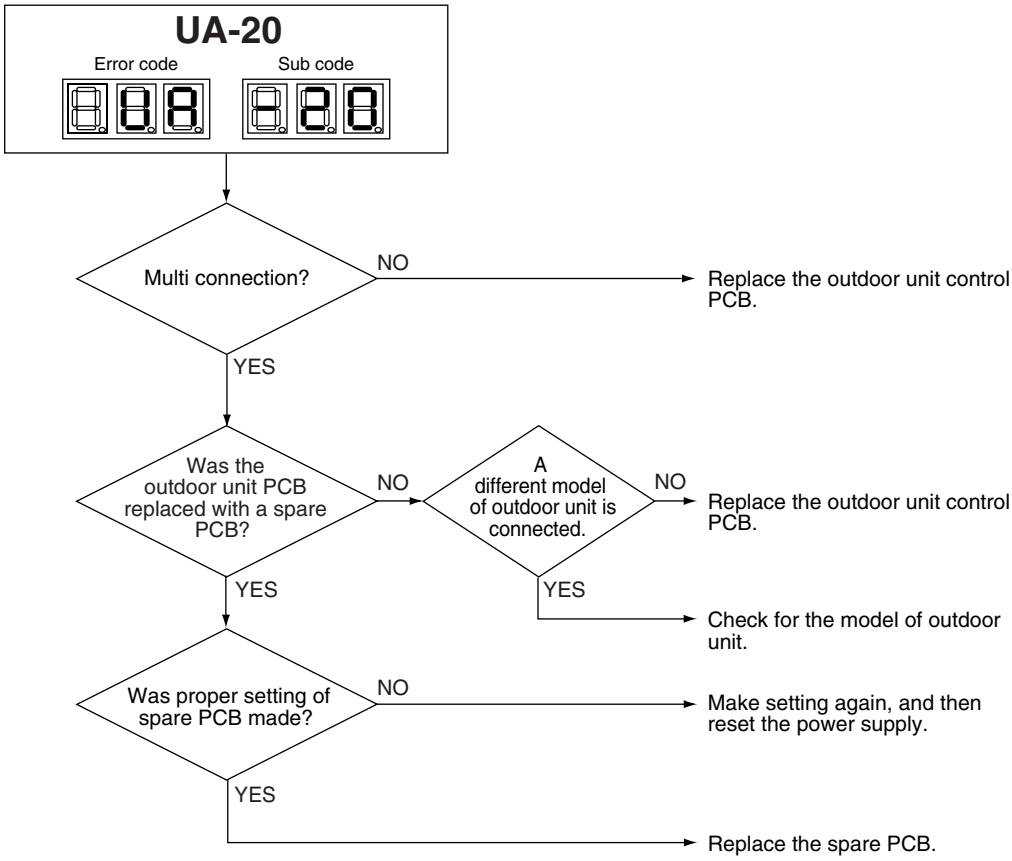

Diagnosis Flow-4

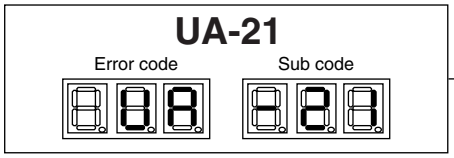

Replace the outdoor unit PCB (A1P).

Diagnosis Flow-5

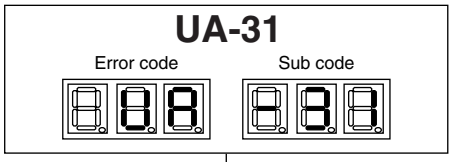

Is the multi combination of outdoor units proper?

NO → Correct the multi combination of outdoor units.

YES ↓

Was the outdoor unit PCB replaced with a spare PCB?

NO → Replace the outdoor unit PCB (A1P).

YES ↓

Is the procurement of the spare PCB proper?

NO → Procure a proper spare PCB.

YES ↓

Is the setting of the spare PCB proper?

NO → Make setting again, and then reset the power supply.

YES → Replace the outdoor unit PCB (A1P).

3.39 Address Duplication of Centralized Control Equipment

Error Code

UE

Applicable Models

All indoor models
Centralized control equipment

Method of Error Detection

The principal indoor unit detects the same address as that of its own on any other indoor unit.

Error Decision Conditions

The error decision is made as soon as the abnormality aforementioned is detected.

Supposed Causes

- Address duplication of centralized control equipment
- Defective indoor unit PCB

Troubleshooting

Caution Be sure to turn off the power switch before connecting or disconnecting connectors, or parts may be damaged.

The centralized address is duplicated. → Make setting change so that the centralized address will not be duplicated.

3.40 Transmission Error between Centralized Control Equipment and Indoor Unit

Error Code UE

Applicable Models All indoor models Schedule timer
Central remote controller

Method of Error Detection Micro-computer checks if transmission between indoor unit and centralized control equipment is normal.

Error Decision Conditions When transmission is not carried out normally for a certain amount of time

Supposed Causes

- Transmission error between optional controllers for centralized control equipment and indoor unit
- Connector for setting main controller is disconnected.
  (or disconnection of connector for independent / combined use changeover switch.)
- Defective PCB for central remote controller
- Defective indoor unit PCB

Troubleshooting

Caution Be sure to turn off the power switch before connecting or disconnecting connectors, or parts may be damaged.

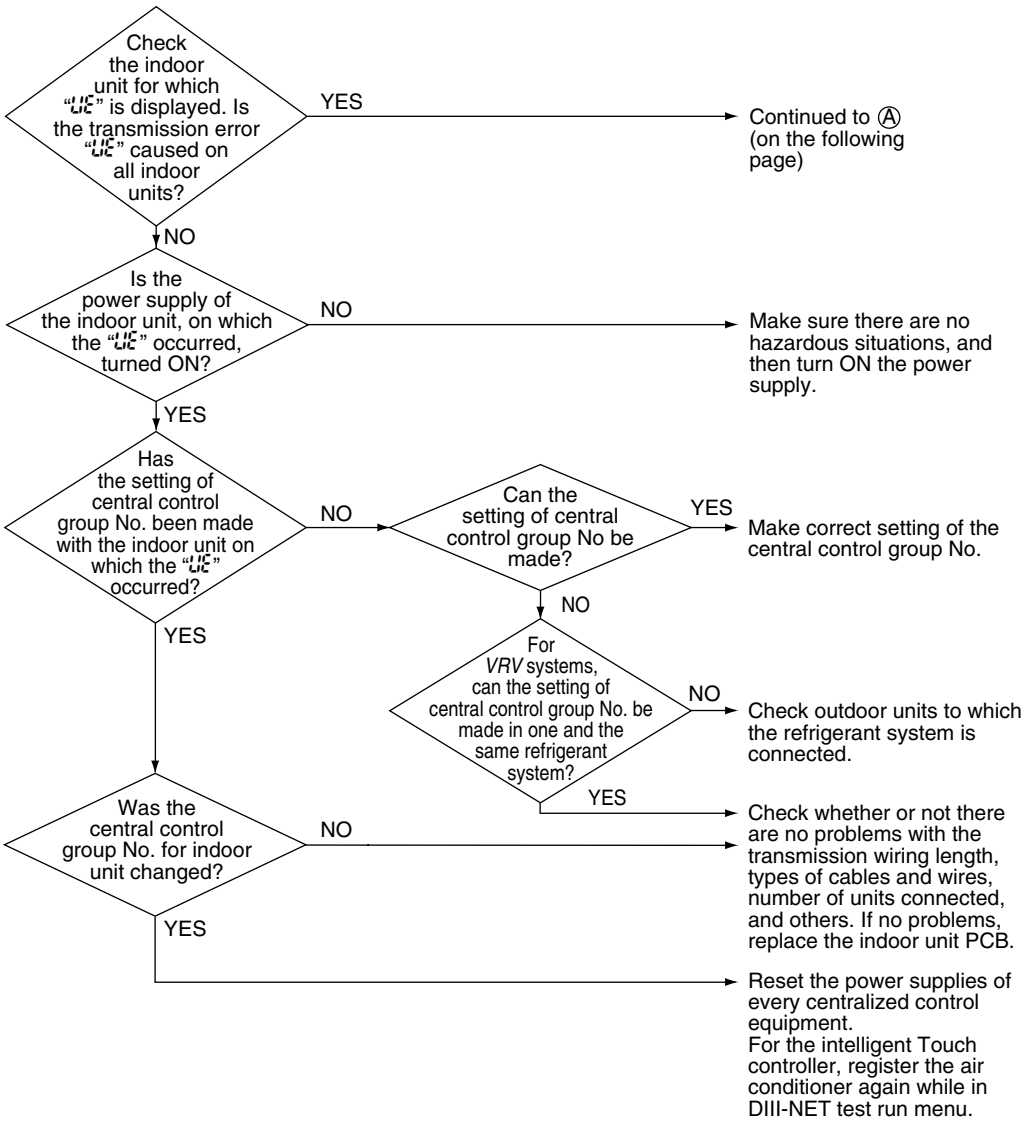

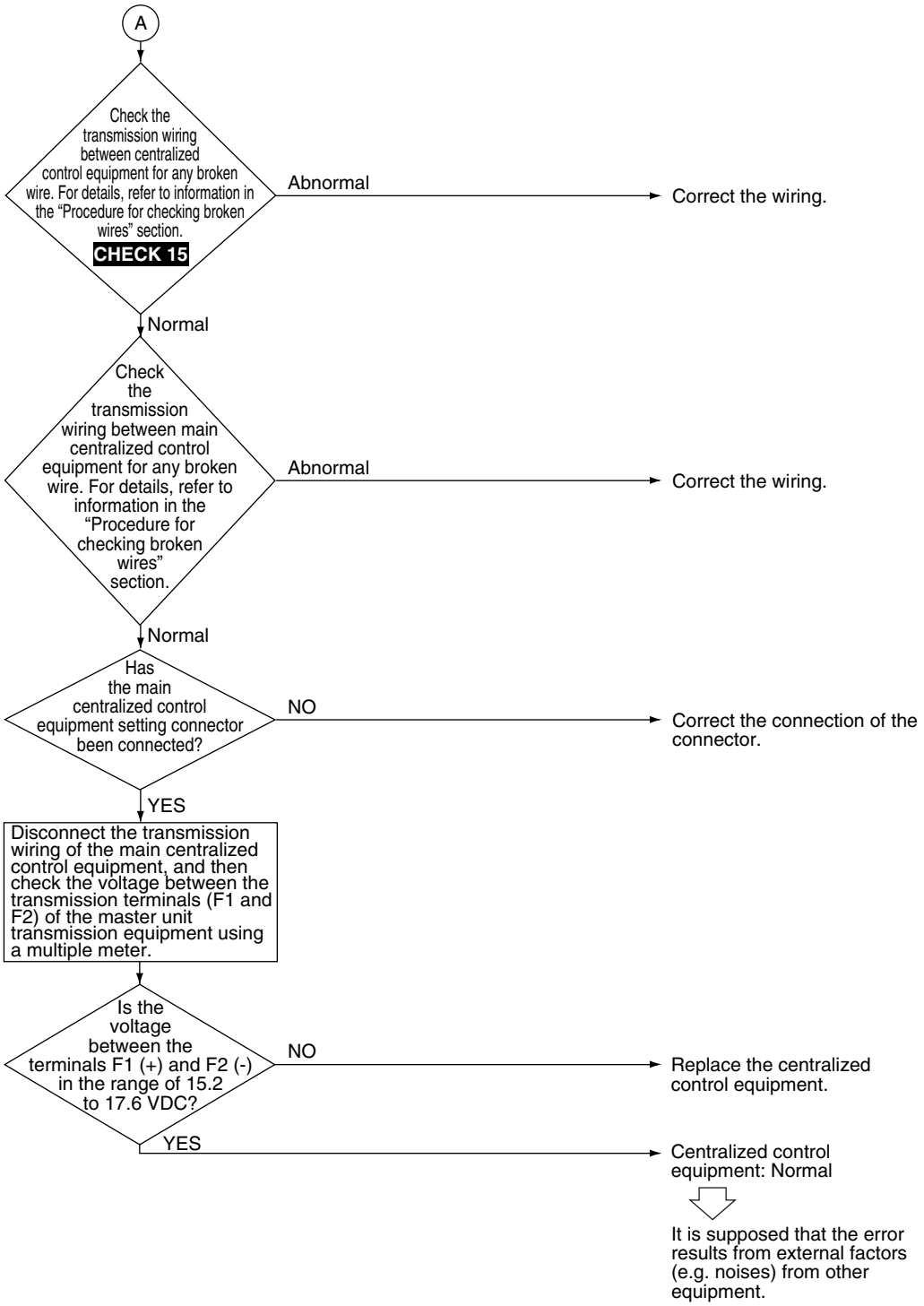

CHECK 15 Refer to P.225.

3.41 System is not Set yet

Error Code

UF

Applicable Models

All indoor models
RXYQ-T

Method of Error Detection

On check operation, the number of indoor units in terms of transmission is not corresponding to that of indoor units that have made changes in temperature.

Error Decision Conditions

The error is determined as soon as the abnormality aforementioned is detected through checking the system for any erroneous connection of units on the check operation.

Supposed Causes

- Improper connection of transmission wiring between indoor-outdoor units and outdoor-outdoor units
- Failure to execute check operation
- Defective indoor unit PCB
- Stop valve is not opened

Troubleshooting

Caution Be sure to turn off the power switch before connecting or disconnecting connectors, or parts may be damaged.

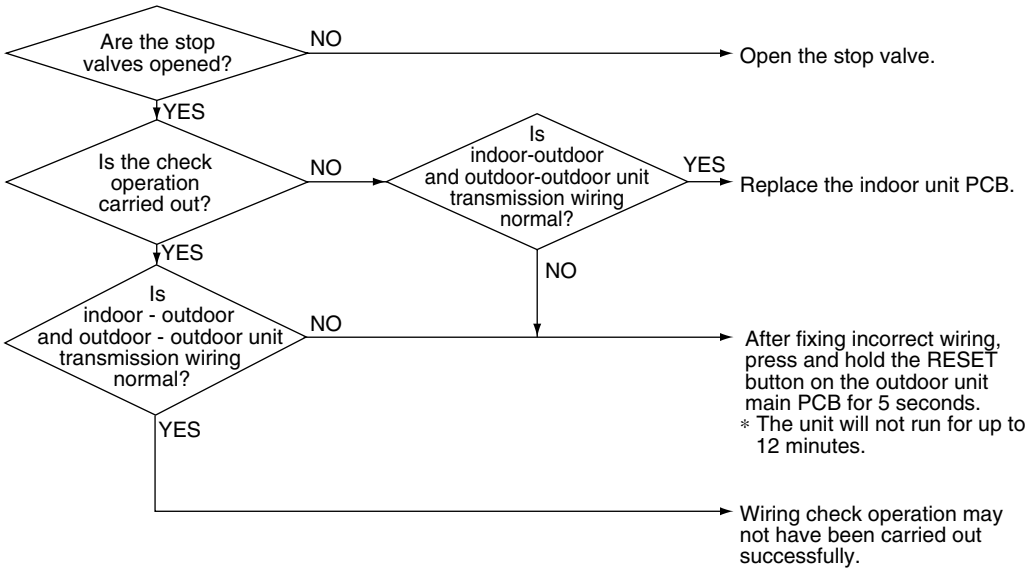

3.42 System Abnormality, Refrigerant System Address Undefined

Error Code	LH
Applicable Models	All indoor models RXYQ-T
Method of Error Detection	Detect an indoor unit with no auto address setting.
Error Decision Conditions	The error decision is made as soon as the abnormality aforementioned is detected.
Supposed Causes	■ Improper connection of transmission wiring between indoor-outdoor units and outdoor-outdoor units ■ Defective indoor unit PCB ■ Defective outdoor unit PCB (A1P)

Troubleshooting

Caution Be sure to turn off the power switch before connecting or disconnecting connectors, or parts may be damaged.

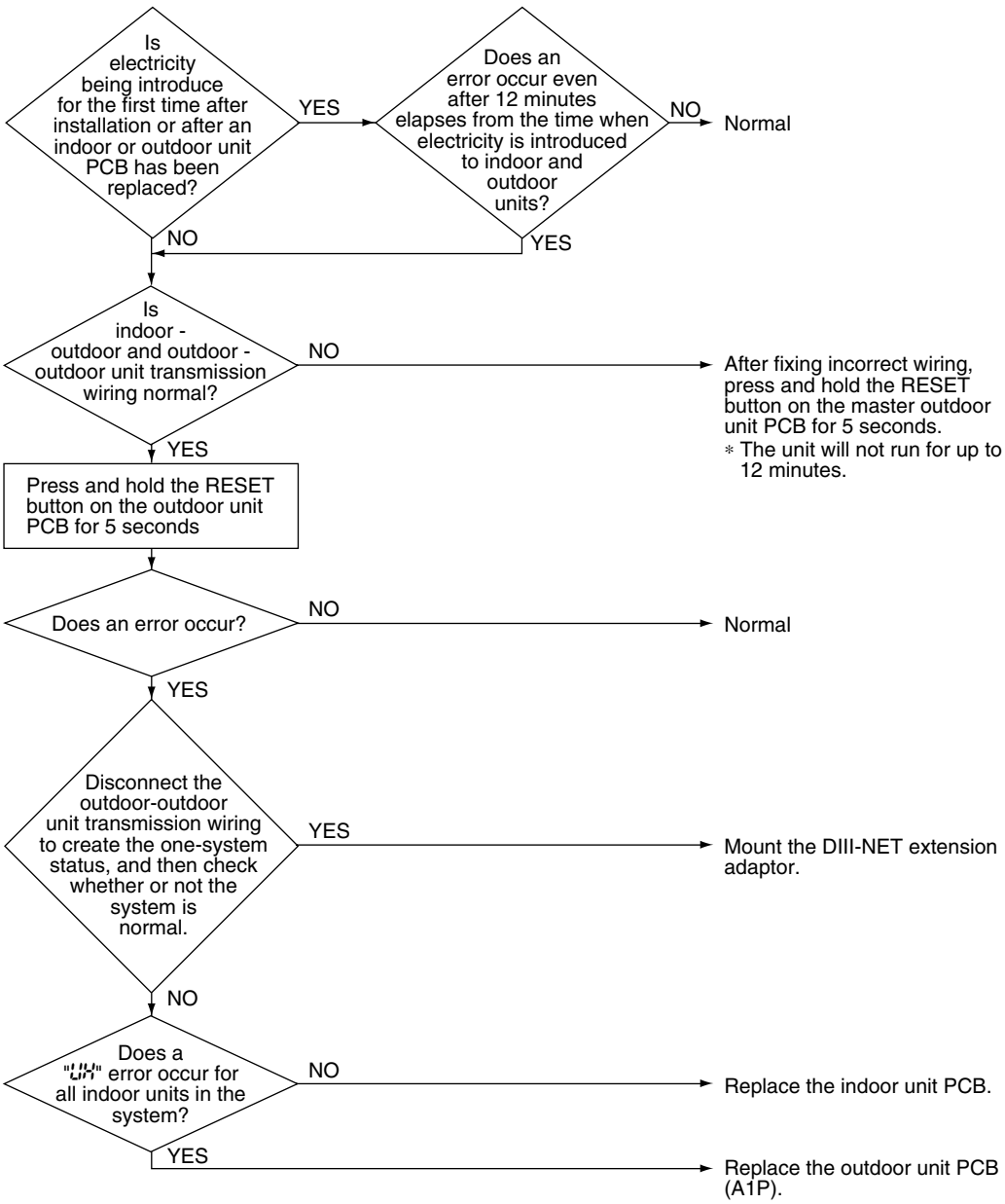

3.43 Check

CHECK 1 Check for Causes of Rise in High Pressure

Referring to the Fault Tree Analysis (FTA) shown below, probe the defective points.

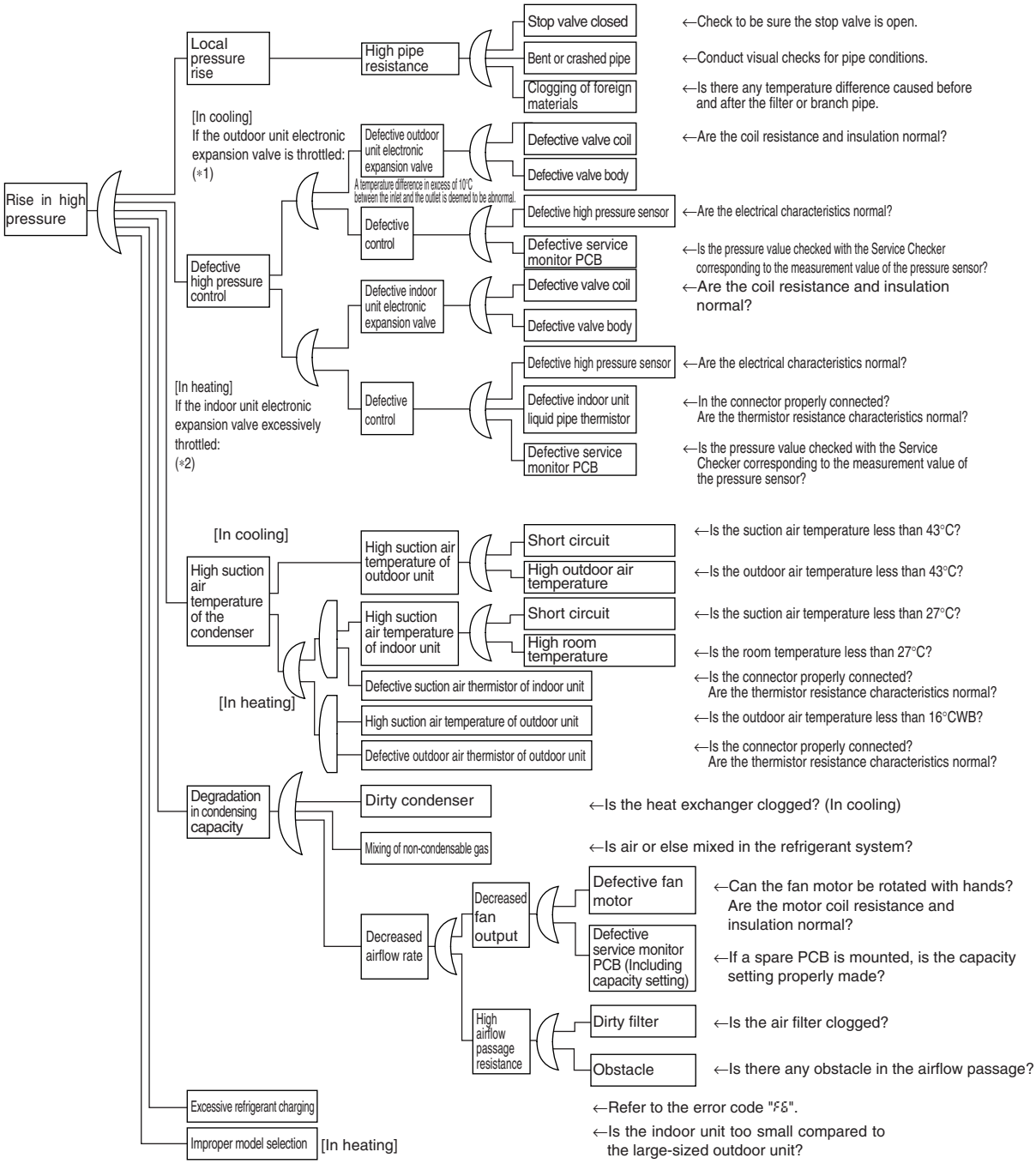

Note: *1. In cooling, it is normal if the outdoor unit electronic expansion valve (main) is fully open.
*2. In heating, the indoor unit electronic expansion valve is used for “subcooling degree control”.

CHECK 2 Check for Causes of Dropping Low Pressure

Referring to the Fault Tree Analysis (FTA) shown below, probe the defective points.

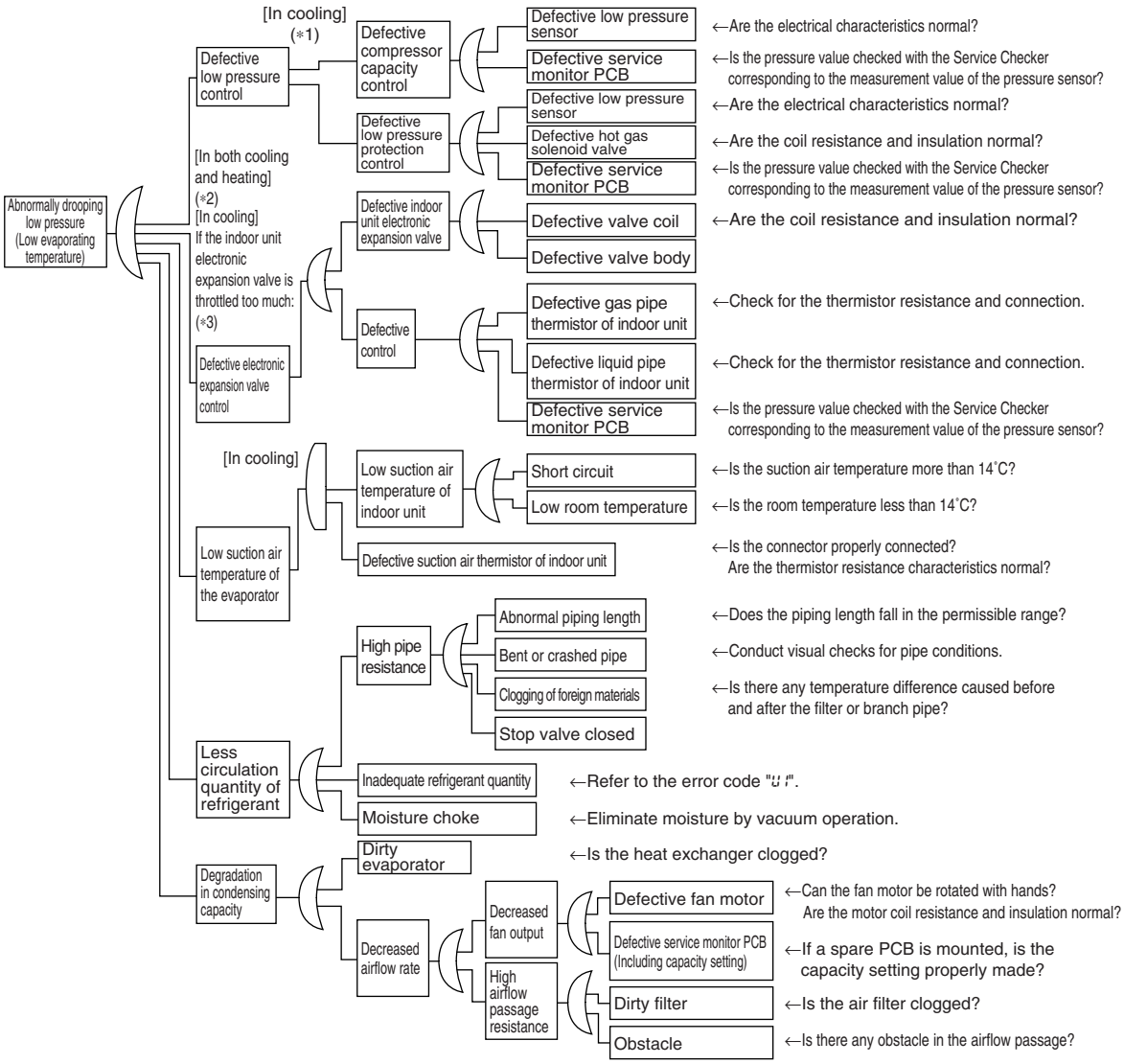

Note:
- *1. For details of compressor capacity control while in cooling.
- *2. The “low pressure protection control” includes low pressure protection control and hot gas bypass control.
- *3. In cooling, the indoor unit electronic expansion valve is used for “superheated degree control”.

CHECK 3 Check the Factors of Overheat Operation (∗4)

Identify the defective points referring to the failure factor analysis (FTA) as follows.

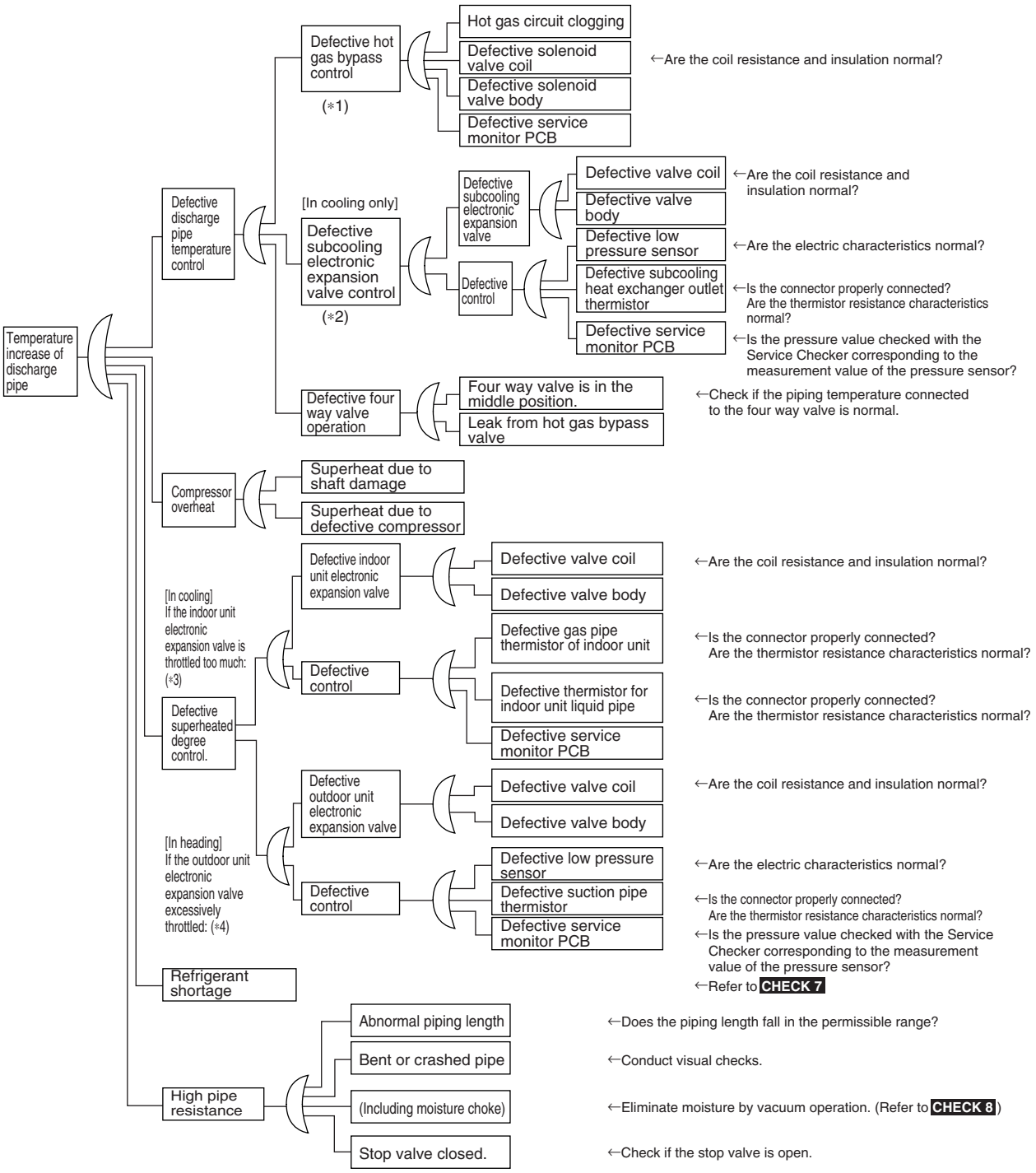

Note:

∗1. Refer to “Low pressure protection control” for hot gas bypass control.

∗2. Refer to “Subcooling electronic expansion valve control”.

∗3. “Superheating temperature control” in cooling is conducted by indoor unit electronic expansion valve.

∗4. Superheating temperature control in heating is conducted by outdoor unit electronic expansion valve (main).

∗5. Judgement criteria of superheat operation:
(1) Suction gas superheated degree: 10°C and over. (2) Discharge gas superheated degree: 45°C and over, except immediately after compressor starts up or is running under drooping control.
(Use the above values as a guide. Depending on the other conditions, the unit may be normal despite the values within the above range.)

CHECK 4 Power Transistor Check

Perform the following procedures prior to check.
(1) Power OFF.
(2) Remove all the wiring connected to the PCB where power transistors are mounted on.

[Preparation]
Multiple tester

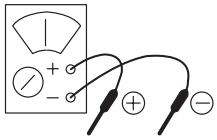

∗ Prepare the analog type of multiple tester. For the digital type of multiple tester, those with diode check function are available for the checking.

[Point of Measurement and Judgement Criteria]
Turn OFF the power supply. Then, after a lapse of 10 minutes or more, make measurement of resistance.

When using the analog type of multiple tester, make measurement in resistance measurement mode in the x1kΩ range.

No.	Measuring point +	Measuring point −	Judgement Criteria	Remarks
1	P2	U	2 ~ 15kΩ	
2	P2	V		
3	P2	W		
4	U	P2	15kΩ and more (including ∞)	Due to condenser charge and so on, resistance measurement may require some time.
5	V	P2		
6	W	P2		
7	N3	U		
8	N3	V		
9	N3	W		
10	U	N3	2 ~ 15kΩ	
11	V	N3		
12	W	N3		

When using the digital type of multiple tester, make measurement in diode check mode (→▶|)

No.	Measuring point +	Measuring point −	Judgement Criteria	Remarks
1	P2	U	1.2V and more	Due to condenser charge and so on, resistance measurement may require some time.
2	P2	V		
3	P2	W		
4	U	P2	0.3 ~ 0.7V	
5	V	P2		
6	W	P2		
7	N3	U		
8	N3	V		
9	N3	W		
10	U	N3	1.2V and more	Due to condenser charge and so on, resistance measurement may require some time.
11	V	N3		
12	W	N3		

[PCB and Circuit Diagram]

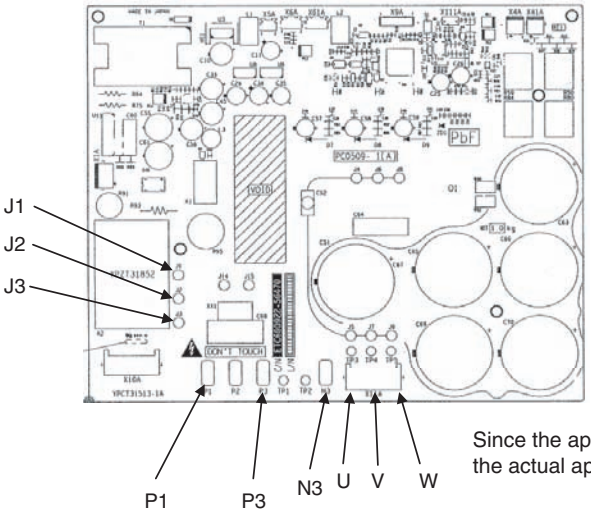

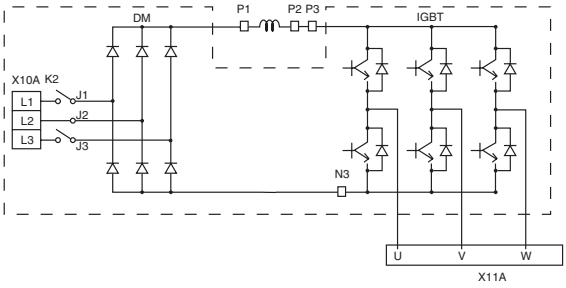

Since the appearance of PCB shown in this outline drawing is different from the actual appearance, use it as a reference drawing.

CHECK 7 **Check for Shortage of Refrigerant.**

In case of *VRV* Systems, the only way to judge as the shortage of refrigerant is with operating conditions due to the relationship to pressure control and electronic expansion valve control. As information for making a judgement, refer to the information below.

Diagnosis of shortage of refrigerant

1. The superheated degree of suction gas rises. Consequently, the compressor discharge gas temperature becomes higher.
2. The superheated degree of suction gas rises. Consequently, the electronic expansion valve turns open.
3. Low pressure drops to cause the unit not to demonstrate cooling capacity (heating capacity).

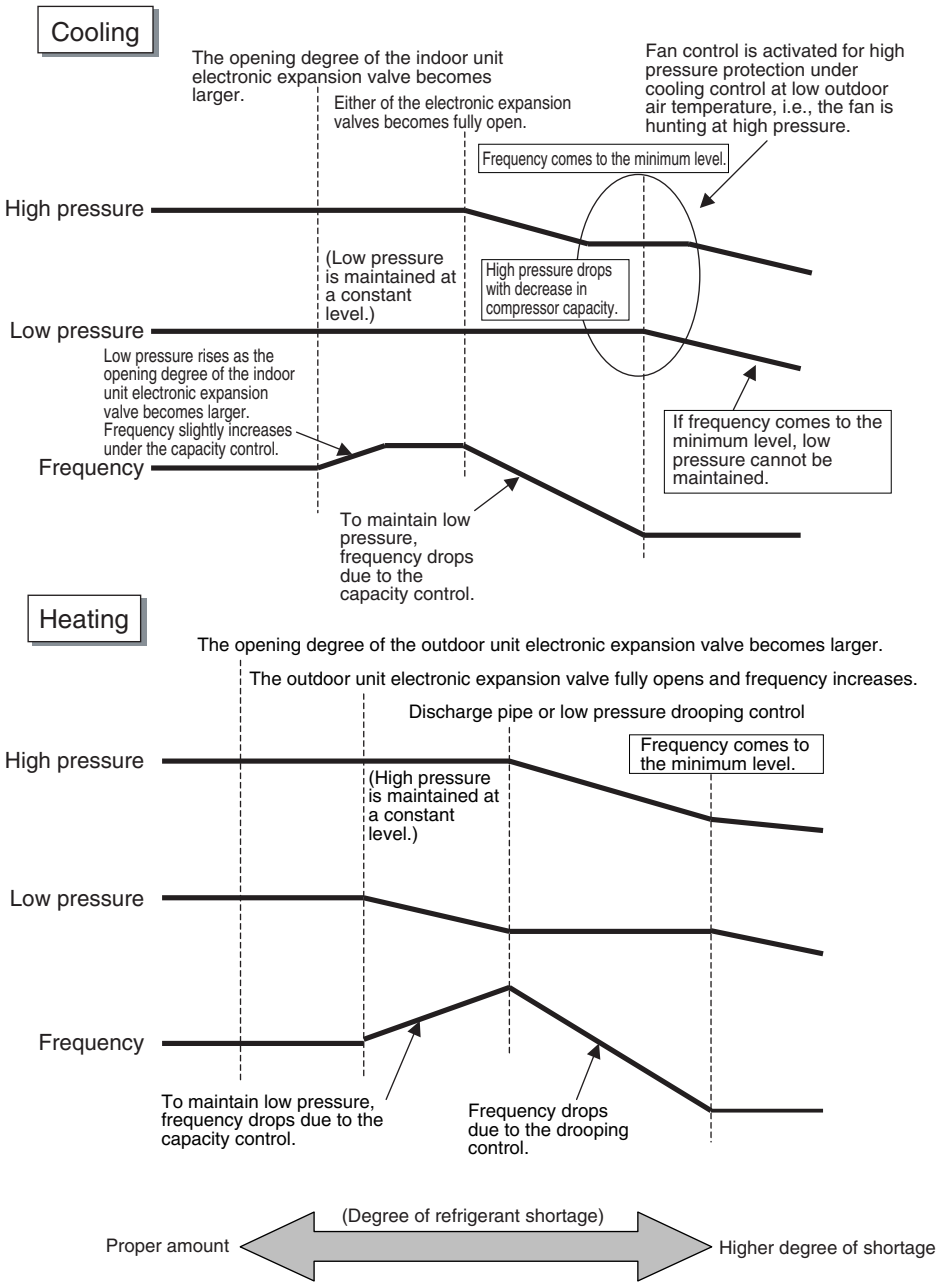

CHECK 8 Vacuuming and Dehydration Procedure

Conduct vacuuming and dehydration in the piping system following the procedure for <Normal vacuuming and dehydration> described below.
Furthermore, if moisture may get mixed in the piping system, follow the procedure for <Special vacuuming and dehydration> described below.

<Normal vacuuming and dehydration>

(1) Vacuuming and dehydration
- Use a vacuum pump that enables vacuuming up to -100.7kPa (5 torr, -755 mmHg).
- Connect manifold gauges to the service ports of liquid pipe and gas pipe and run the vacuum pump for a period of 2 or more hours to conduct evacuation to -100.7kPa or less.
- If the degree of vacuum does not reach -100.7kPa or less even though evacuation is conducted for a period of 2 hours, moisture will have entered the system or refrigerant leakage will have been caused. In this case, conduct evacuation for a period of another 1 hour.
- If the degree of vacuum does not reach -100.7kPa or less even though evacuation is conducted for a period of 3 hours, conduct the leak tests.

(2) Leaving in vacuum state
- Leave the compressor at the degree of vacuum of -100.7kPa or less for a period of 1 hour or more, and then check to be sure that the vacuum gauge reading does not rise. (If the reading rises, moisture may have remained in the system or refrigerant leakage may have been caused.)

(3) Additional refrigerant charge
- Purge air from the manifold gauge connection hoses, and then charge a necessary amount of refrigerant.

<Special vacuuming and dehydration> - In case of moisture may get mixed in the piping*

(1) Vacuuming and dehydration
- Follow the same procedure as that for 1) Normal vacuuming and dehydration described above.

(2) Vacuum break
- Pressurize with nitrogen gas up to 0.05MPa.

(3) Vacuuming and dehydration
- Conduct vacuuming and dehydration for a period of 1 hour or more. If the degree of vacuum does not reach -100.7kPa or less even though evacuation is conducted for a period of 2 hours or more, repeat vacuum break - vacuuming and dehydration.

(4) Leaving in vacuum state
- Leave the compressor at the degree of vacuum of -100.7kPa or less for a period of 1 hour or more, and then check to be sure that the vacuum gauge reading does not rise.

(5) Additional refrigerant charge
- Purge air from the manifold gauge connection hoses, and then charge a necessary amount of refrigerant.

* In case of construction during rainy reason, if dew condensation occurs in the piping due to extended construction period, or rainwater or else may enter the piping during construction work:

CHECK 11 Thermistor Resistance / Temperature Characteristics

Indoor unit

For suction air (except FXVQ-M)	R1T
For heat exchanger inlet (only FXVQ-M)	R1T
For liquid pipe	R2T
For gas pipe	R3T
For PTC (only FXFQ)	R4T
For heat exchanger outlet (only FXVQ-M)	R4T
For NTC (only FXMQ-P)	R5T

Indoor unit

For discharge air (only FXMQ-P, FXMQ-MF)	R4T

Outdoor unit

Refer to the table A below.

Outdoor unit

For discharge pipe	R21T R22T

T°C	kΩ
-30	354.1
-25	259.7
-20	192.6
-15	144.2
-10	109.1
-5	83.25
0	64.10
5	49.70
10	38.85
15	30.61
20	24.29
25	19.41
30	15.61
35	12.64
40	10.30
45	8.439
50	6.954
55	5.761
60	4.797
65	4.014
70	3.375
75	2.851
80	2.418
85	2.060
90	1.762
95	1.513
100	1.304
105	1.128
110	0.9790
115	0.8527
120	0.7450
125	0.6530
130	0.5741

3PA61998L (AD92A057)

T°C	kΩ
-30	361.7719
-25	265.4704
-20	196.9198
-15	147.5687
-10	111.6578
-5	85.2610
0	65.6705
5	50.9947
10	39.9149
15	31.4796
20	25.0060
25	20.0000
30	16.1008
35	13.0426
40	10.6281
45	8.7097
50	7.1764
55	5.9407
60	4.9439
65	4.1352
70	3.4757
75	2.9349
80	2.4894
85	2.1205
90	1.8138
95	1.5575
100	1.3425
105	1.1614

3SA48001 (AD87A001J)

T°C	kΩ
-30	3257.371
-25	2429.222
-20	1827.883
-15	1387.099
-10	1061.098
-5	817.9329
0	635.0831
5	496.5712
10	391.0070
15	309.9511
20	247.2696
25	198.4674
30	160.2244
35	130.0697
40	106.1517
45	87.0725
50	71.7703
55	59.4735
60	49.5180
65	41.4168
70	34.7923
75	29.3499
80	24.8586
85	21.1360
90	18.0377
95	15.4487
100	13.2768
105	11.4395
110	9.8902
115	8.5788
120	7.4650
125	6.5156
130	5.7038
135	5.0073
140	4.4080
145	3.8907
150	3.4429

3SA48006 (AD87A001J)

Table A

Thermistor	RXYQ6/8T	RXYQ10/12T	RXYQ14/16/18T	RXYQ20T
For outdoor air	R1T	R1T	R1T	R1T
For accumulator	R3T	R3T	R3T	R3T
For heat ex. liquid pipe	R4T	R4T	R4T	R4T
For subcooling liquid pipe	R5T	R5T	R5T	R5T
For heat ex. gas pipe	R6T	R6T	R6T	R6T
For coil	R7T	R7T	R7T	R7T
For M1C body	—	R8T	—	R8T

CHECK 12 Pressure Sensor

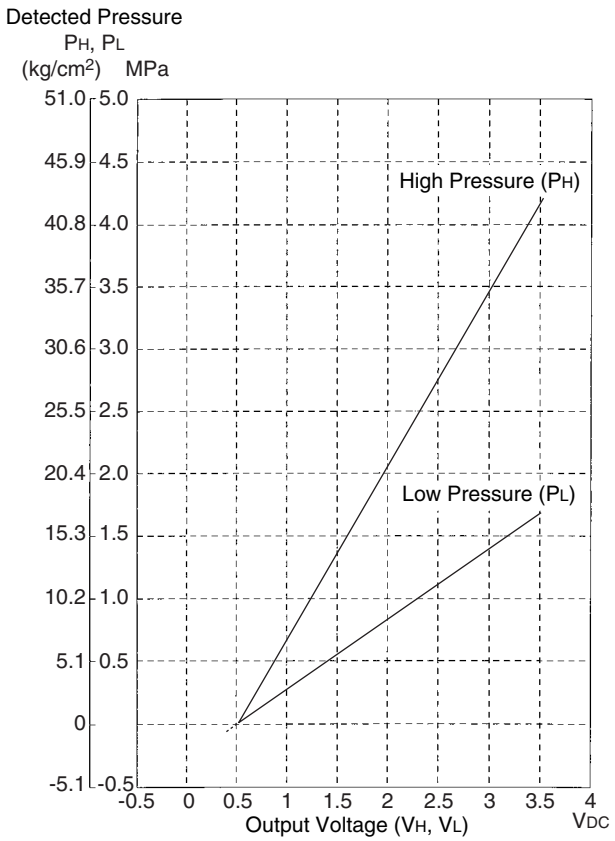

$P_H = 1.38V_H - 0.69$
$P_L = 0.57V_L - 0.28$
P_H: High pressure (MPa)
P_L: Low pressure (MPa)

V_H: Output Voltage [High Side] V_{DC}
V_L: Output Voltage [Low Side] V_{DC}

CHECK 13 Make Measurement of Voltage of the High Pressure Sensor

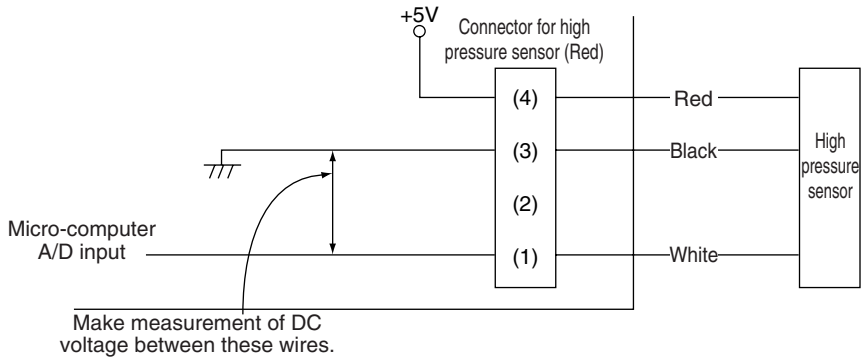

CHECK 14 Make Measurement of Voltage of the Low Pressure Sensor

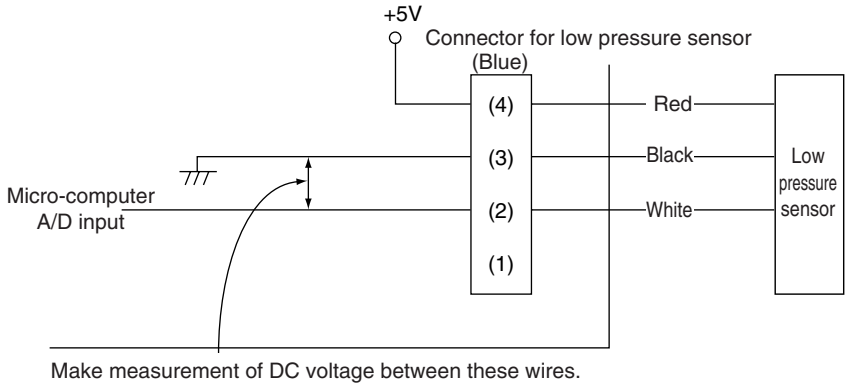

CHECK 15 Broken Wire Check of the Relay Wires

1. Procedure for checking outdoor-outdoor unit transmission wiring for broken wires
   On the system shown below, turn OFF the power supply to all equipment, short circuit between the outdoor-outdoor unit terminal F1 and F2 in the "Outdoor Unit A" that is farthest from the central remote controller, and then conduct continuity checks between the transmission wiring terminal blocks F1 and F2 of the central remote controller using a multiple meter. If there is continuity between the said terminal blocks, the outdoor-outdoor unit transmission wiring has no broken wires in it.
   If there is no continuity, the transmission wiring may have broken wires. With the outdoor-outdoor unit terminal of the "Outdoor Unit A" short circuited, conduct continuity checks between the transmission wiring terminal blocks F1 and F2 of the unified ON/OFF controller. If there is no continuity as well, conduct continuity checks between the outdoor-outdoor unit terminal of the "Outdoor Unit E", between the outdoor-outdoor unit terminal of the "Outdoor Unit D", between the outdoor-outdoor unit terminal of the "Outdoor Unit C", … in the order described, thus identifying the place with continuity.
   If the place with continuity can be identified, there may be broken wires in places before the said place with continuity.

2. Procedure for checking indoor-outdoor unit transmission wiring for broken wires (for checking the indoor-outdoor unit transmission wiring of the "Outdoor Unit C" for broken wires)
   Turn OFF the power supply to all equipment, short circuit between the indoor-outdoor unit terminal F1 and F2 in the "Outdoor Unit C, and then conduct continuity checks between the transmission wirings F1 and F2 of the "Indoor Unit a" that is farthest from the "Outdoor Unit C" using a multiple meter. If there is continuity between the said transmission wirings, the indoor-outdoor unit transmission wiring has no broken wires in it.
   If there is no continuity, the transmission wiring may have broken wires. With the indoor-outdoor unit terminal of the "Outdoor Unit C" short circuited, identify the place with continuity in the transmission wiring of the "Indoor Unit b", transmission wiring of the "Indoor Unit c", and transmission wiring of the "Indoor Unit d" in the order described.
   If the place with continuity can be identified, there may be broken wires in places before the said place with continuity.

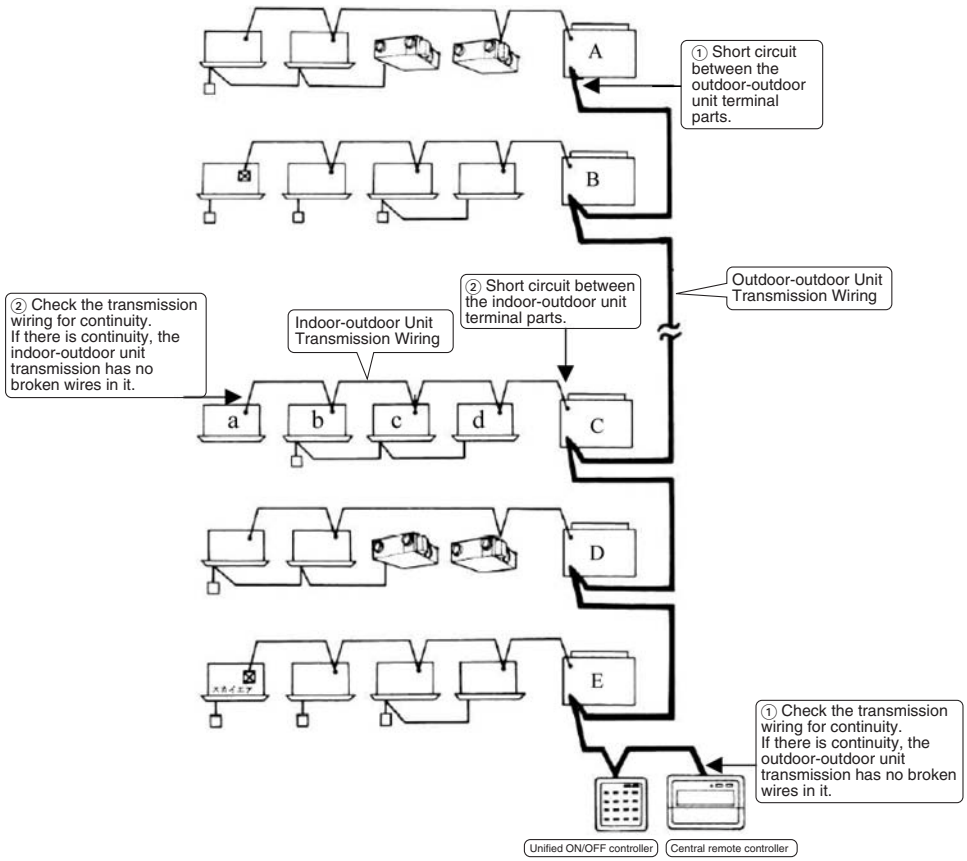

CHECK 16

Check on Connector of Fan Motor (Power Supply Cable)

(1) Turn OFF the power supply.
Measure the resistance between phases of U, V, W at the motor side connectors (3-core wire) to check that the values are balanced and there is no short circuiting, while connector or relay connector is disconnected.

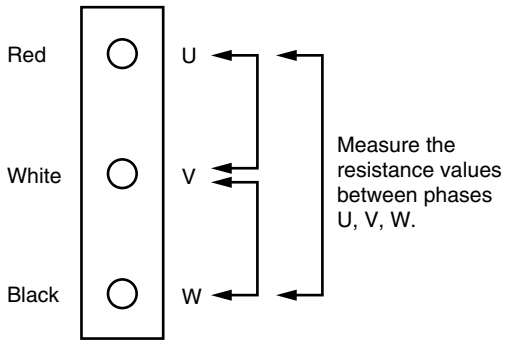

CHECK 17

(1) Turn OFF the power supply.
(2) Measure the resistance between Vcc and each phase of U, V, W, and GND and each phase at the motor side connectors (5-core wire) to check that the values are balanced within the range of ± 20 %, while connector or relay connector is disconnected.
Furthermore, to use a multiple meter for measurement, connect the probe of negative pole to Vcc and that of positive pole to GND.

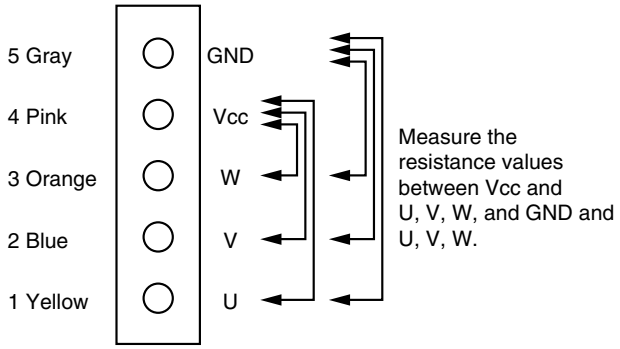

Part 7
Appendix

1. Wiring Diagrams.....228
1.1 Outdoor Unit.....228

1. Wiring Diagrams

1.1 Outdoor Unit

RXYQ6 · 8TY1

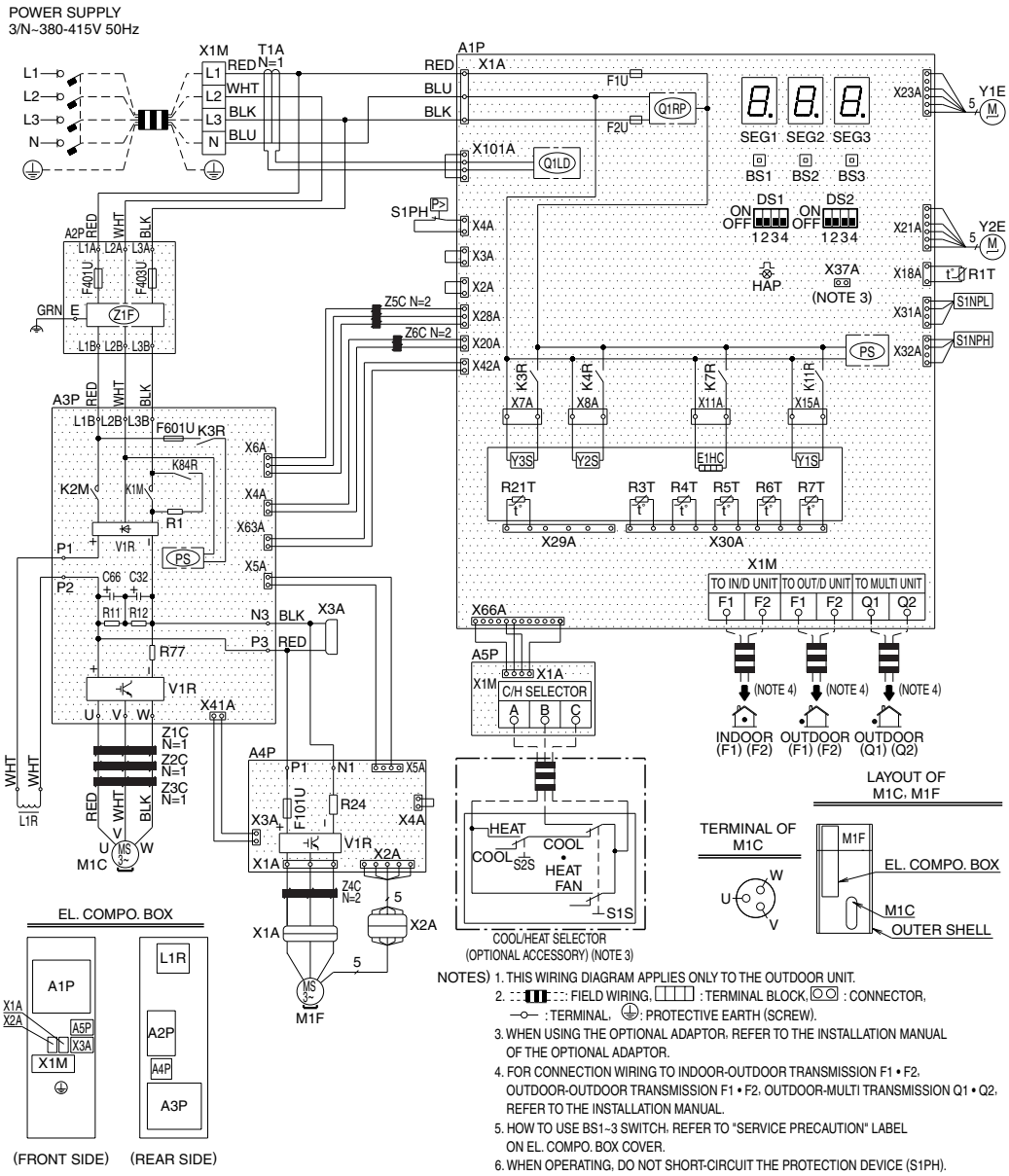

NOTES) 1. THIS WIRING DIAGRAM APPLIES ONLY TO THE OUTDOOR UNIT.
2. : FIELD WIRING, : TERMINAL BLOCK, : CONNECTOR, : TERMINAL, : PROTECTIVE EARTH (SCREW).
3. WHEN USING THE OPTIONAL ADAPTOR, REFER TO THE INSTALLATION MANUAL OF THE OPTIONAL ADAPTOR.
4. FOR CONNECTION WIRING TO INDOOR-OUTDOOR TRANSMISSION F1 • F2, OUTDOOR-OUTDOOR TRANSMISSION F1 • F2, OUTDOOR-MULTI TRANSMISSION Q1 • Q2, REFER TO THE INSTALLATION MANUAL.
5. HOW TO USE BS1~3 SWITCH, REFER TO "SERVICE PRECAUTION" LABEL ON EL. COMPO. BOX COVER.
6. WHEN OPERATING, DO NOT SHORT-CIRCUIT THE PROTECTION DEVICE (S1PH).
7. COLORS BLK : BLACK ; RED : RED ; BLU : BLUE ; WHT : WHITE ; GRN : GREEN.

A1P	PRINTED CIRCUIT BOARD (MAIN)	M1C	MOTOR (COMPRESSOR)	X1M	TERMINAL BLOCK (POWER SUPPLY)
A2P	PRINTED CIRCUIT BOARD (NOISE FILTER)	M1F	MOTOR (FAN)	X1M	TERMINAL BLOCK (CONTROL) (A1P)
A3P	PRINTED CIRCUIT BOARD (INV.)	PS	SWITCHING POWER SUPPLY (A1P, A3P)	X1M	TERMINAL STRIP (ABC I/P) (A5P)
A4P	PRINTED CIRCUIT BOARD (FAN)	Q1LD	LEAKAGE DETECTION CIRCUIT (A1P)	Y1E	ELECTRONIC EXPANSION VALVE (MAIN)
A5P	PRINTED CIRCUIT BOARD (ABC I/P)	Q1RP	PHASE REVERSAL DETECT CIRCUIT (A1P)	Y2E	ELECTRONIC EXPANSION VALVE
BS1~3	BS BUTTON (A1P)	R1T	THERMISTOR (AIR) (A1P)		(INJECTION)
	(MODE, SET, RETURN)	R21T	THERMISTOR (M1C DISCHARGE)	Y1S	SOLENOID VALVE (FOUR WAY VALVE)
C32, C66	CAPACITOR (A3P)	R3T	THERMISTOR (ACCUMULATOR)	Y2S	SOLENOID VALVE
DS1, DS2	DIP SWITCH (A1P)	R4T	THERMISTOR (HEAT EXC. LIQ. PIPE)		(ACCUMULATOR OIL RETURN)
E1HC	CRANKCASE HEATER	R5T	THERMISTOR (SUBCOOLING LIQ. PIPE)	Y3S	SOLENOID VALVE (OIL1)
F1U, F2U	FUSE (T, 3.15A, 250V) (A1P)	R6T	THERMISTOR (HEAT EXC. GAS PIPE)	Z1C~Z6C	NOISE FILTER (FERRITE CORE)
F101U	FUSE (A4P)	R7T	THERMISTOR (COIL)	Z1F	NOISE FILTER (A2P)
F401U, F403U	FUSE (A2P)	R1	RESISTOR (CURRENT LIMITING) (A3P)		(WITH SURGE ABSORBER)
F601U	FUSE (A3P)	R11, R12	RESISTOR (A3P)		
HAP	PILOT LAMP (A1P)	R24	RESISTOR (CURRENT SENSOR) (A4P)		
	(SERVICE MONITOR-GREEN)	R77	RESISTOR (CURRENT SENSOR) (A3P)		
K1M, K2M	MAGNETIC RELAY (A3P)	S1NPH	PRESSURE SENSOR (HIGH)		
K3R	MAGNETIC RELAY (A3P)	S1NPL	PRESSURE SENSOR (LOW)		
K84R	MAGNETIC RELAY (A3P)	S1PH	PRESSURE SWITCH (HIGH)	CONNECTOR FOR OPTIONAL ACCESSORIES	
K3R	MAGNETIC RELAY (Y3S) (A1P)	SEG1~SEG3	7-SEGMENT DISPLAY (A1P)	X37A	CONNECTOR (POWER ADAPTOR)
K4R	MAGNETIC RELAY (Y2S) (A1P)	T1A	CURRENT SENSOR		
K7R	MAGNETIC RELAY (E1HC) (A1P)	V1R	POWER MODULE (A3P) (A4P)	COOL/HEAT SELECTOR	
K11R	MAGNETIC RELAY (Y1S) (A1P)	X1A, X2A	CONNECTOR (M1F)	S1S	SELECTOR SWITCH (FAN/COOL • HEAT)
L1R	REACTOR	X3A	CONNECTOR (CHECK THE RESIDUAL CHARGE)	S2S	SELECTOR SWITCH (COOL/HEAT)

3D085818A

RXYQ10 · 12TY1

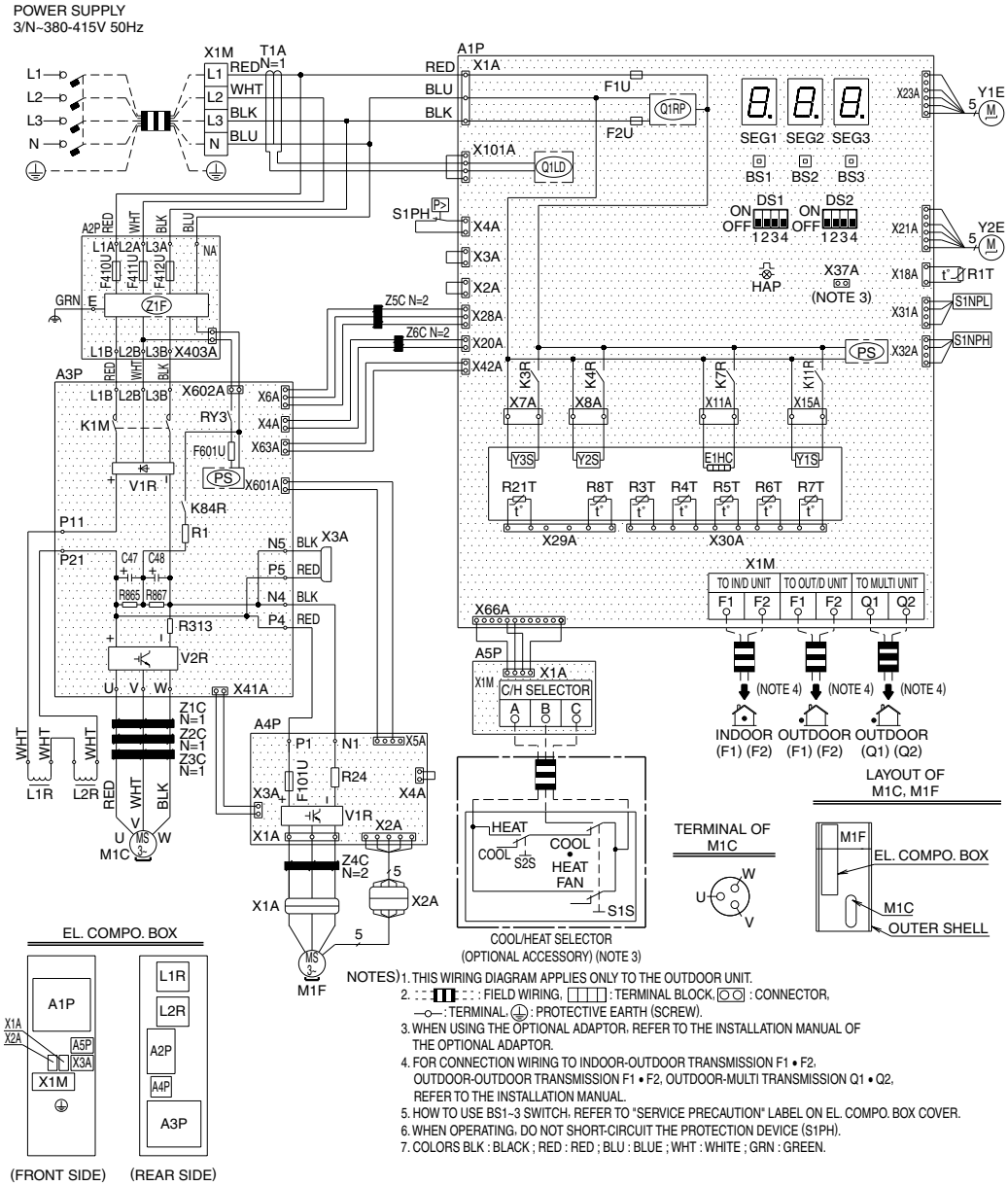

NOTES)
1. THIS WIRING DIAGRAM APPLIES ONLY TO THE OUTDOOR UNIT.
2. : FIELD WIRING, : TERMINAL BLOCK, : CONNECTOR, : TERMINAL, : PROTECTIVE EARTH (SCREW).
3. WHEN USING THE OPTIONAL ADAPTOR, REFER TO THE INSTALLATION MANUAL OF THE OPTIONAL ADAPTOR.
4. FOR CONNECTION WIRING TO INDOOR-OUTDOOR TRANSMISSION F1 • F2, OUTDOOR-OUTDOOR TRANSMISSION F1 • F2, OUTDOOR-MULTI TRANSMISSION Q1 • Q2, REFER TO THE INSTALLATION MANUAL.
5. HOW TO USE BS1~3 SWITCH, REFER TO "SERVICE PRECAUTION" LABEL ON EL. COMPO. BOX COVER.
6. WHEN OPERATING, DO NOT SHORT-CIRCUIT THE PROTECTION DEVICE (S1PH).
7. COLORS BLK : BLACK ; RED : RED ; BLU : BLUE ; WHT : WHITE ; GRN : GREEN.

A1P	PRINTED CIRCUIT BOARD (MAIN)	M1C	MOTOR (COMPRESSOR)	X1A, X2A	CONNECTOR (M1F)
A2P	PRINTED CIRCUIT BOARD (NOISE FILTER)	M1F	MOTOR (FAN)	X3A	CONNECTOR (CHECK THE RESIDUAL CHARGE)
A3P	PRINTED CIRCUIT BOARD (INV.)	PS	SWITCHING POWER SUPPLY (A1P, A3P)	X1M	TERMINAL BLOCK (POWER SUPPLY)
A4P	PRINTED CIRCUIT BOARD (FAN)	Q1LD	LEAKAGE DETECTION CIRCUIT (A1P)	X1M	TERMINAL BLOCK (CONTROL) (A1P)
A5P	PRINTED CIRCUIT BOARD (ABC I/P)	Q1RP	PHASE REVERSAL DETECT CIRCUIT (A1P)	X1M	TERMINAL STRIP (ABC I/P) (A5P)
BS1~3	BS BUTTON (A1P)	R1T	THERMISTOR (AIR) (A1P)	Y1E	ELECTRONIC EXPANSION VALVE (MAIN)
	(MODE, SET, RETURN)	R21T	THERMISTOR (M1C DISCHARGE)	Y2E	ELECTRONIC EXPANSION VALVE
C47, C48	CAPACITOR (A3P)	R3T	THERMISTOR (ACCUMULATOR)		(INJECTION)
DS1, DS2	DIP SWITCH (A1P)	R4T	THERMISTOR (HEAT EXC. LIQ. PIPE)	Y1S	SOLENOID VALVE (FOUR WAY VALVE)
E1HC	CRANKCASE HEATER	R5T	THERMISTOR (SUBCOOLING LIQ. PIPE)	Y2S	SOLENOID VALVE
F1U, F2U	FUSE (T, 3.15A, 250V) (A1P)	R6T	THERMISTOR (HEAT EXC. GAS PIPE)		(ACCUMULATOR OIL RETURN)
F101U	FUSE (A4P)	R7T	THERMISTOR (COIL)	Y3S	SOLENOID VALVE (OIL1)
F410U~F412U	FUSE (A2P)	R8T	THERMISTOR (M1C BODY)	Z1C~Z6C	NOISE FILTER (FERRITE CORE)
F601U	FUSE (A3P)	R1	RESISTOR (CURRENT LIMITING) (A3P)	Z1F	NOISE FILTER (A2P)
HAP	PILOT LAMP (A1P)	R24	RESISTOR (CURRENT SENSOR) (A4P)		(WITH SURGE ABSORBER)
	(SERVICE MONITOR-GREEN)	R313	RESISTOR (CURRENT SENSOR) (A3P)		
K1M	MAGNETIC CONTACTOR (A3P)	R865, R867	RESISTOR (A3P)		
RY3	MAGNETIC RELAY (A3P)	S1NPH	PRESSURE SENSOR (HIGH)		
K84R	MAGNETIC RELAY (A3P)	S1NPL	PRESSURE SENSOR (LOW)	CONNECTOR FOR OPTIONAL ACCESSORIES	
K3R	MAGNETIC RELAY (Y3S) (A1P)	S1PH	PRESSURE SWITCH (HIGH)	X37A	CONNECTOR (POWER ADAPTOR)
K4R	MAGNETIC RELAY (Y2S) (A1P)	SEG1~SEG3	7-SEGMENT DISPLAY (A1P)		
K7R	MAGNETIC RELAY (E1HC) (A1P)	T1A	CURRENT SENSOR	COOL/HEAT SELECTOR	
K11R	MAGNETIC RELAY (Y1S) (A1P)	V1R	POWER MODULE (A3P) (A4P)	S1S	SELECTOR SWITCH (FAN/COOL • HEAT)
L1R, L2R	REACTOR	V2R	POWER MODULE (A3P)	S2S	SELECTOR SWITCH (COOL/HEAT)

3D085819B

RXYQ14-18TY1

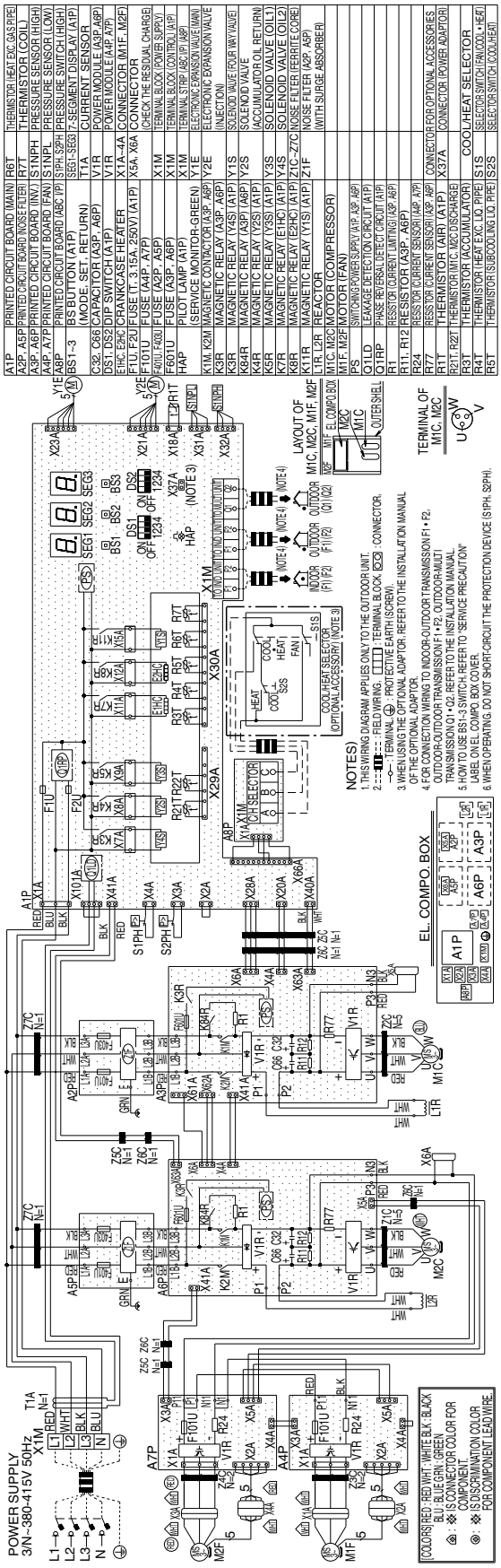

RXYQ20TY1

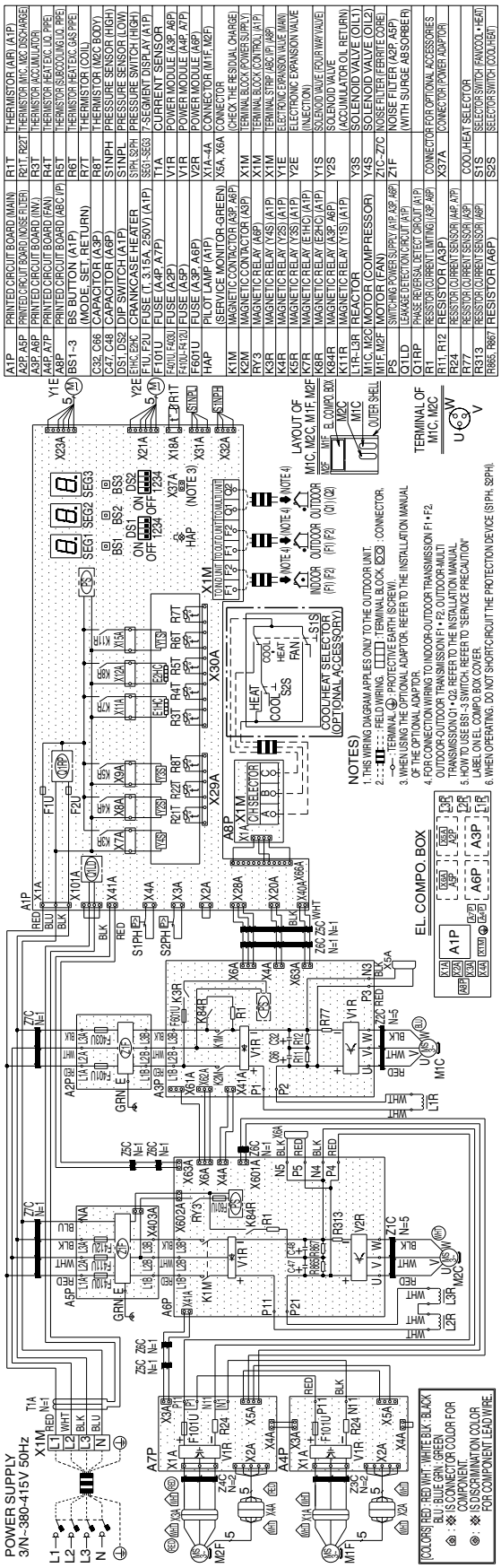

2D085821B

Revision History

Month / Year	Version	Revised contents
08 / 2014	SiMT341407E	First edition

Warning

- Daikin products are manufactured for export to numerous countries throughout the world. Prior to purchase, please confirm with your local authorised importer, distributor and/or retailer whether this product conforms to the applicable standards, and is suitable for use, in the region where the product will be used. This statement does not purport to exclude, restrict or modify the application of any local legislation.
- Ask a qualified installer or contractor to install this product. Do not try to install the product yourself. Improper installation can result in water or refrigerant leakage, electrical shock, fire or explosion.
- Use only those parts and accessories supplied or specified by Daikin. Ask a qualified installer or contractor to install those parts and accessories. Use of unauthorised parts and accessories or improper installation of parts and accessories can result in water or refrigerant leakage, electrical shock, fire or explosion.
- Read the user's manual carefully before using this product. The user's manual provides important safety instructions and warnings. Be sure to follow these instructions and warnings.

If you have any enquiries, please contact your local importer, distributor and/or retailer.

Cautions on product corrosion

1. Air conditioners should not be installed in areas where corrosive gases, such as acid gas or alkaline gas, are produced.
2. If the outdoor unit is to be installed close to the sea shore, direct exposure to the sea breeze should be avoided. If you need to install the outdoor unit close to the sea shore, contact your local distributor.

Dealer

DAIKIN INDUSTRIES, LTD.
Head Office:
Umeda Center Bldg., 2-4-12, Nakazaki-Nishi,
Kita-ku, Osaka, 530-8323 Japan

Tokyo Office:
JR Shinagawa East Bldg., 2-18-1, Konan,
Minato-ku, Tokyo, 108-0075 Japan

http://www.daikin.com

©All rights reserved

●Specifications, designs and other content appearing in this brochure are current as of August 2014 but subject to change without notice.

SiMT341407E
08/2014 AK