DAIKIN

ED 34 - 635

R-410A

Engineering Data

VRV III-S

THE INTELLIGENT AIR CONDITIONING SYSTEM









A special air conditioning system designed
for small offices and shops

COOLING ONLY
HEAT PUMP

Cooling Only Type 50 Hz/ 60 Hz

Heat Pump Type 50 Hz/ 60 Hz

Introduction ii

Part 1 General Information 1 1

Part 2 Indoor Units 17

Ceiling Mounted Cassette Type (Double Flow) ..... 2 FXCQ-M 19

Ceiling Mounted Cassette Type (Multi Flow) ..... 3 FXFQ-M 43

Ceiling Mounted Cassette Corner Type ..... 4 FXKQ-MA 91

Slim Ceiling Mounted Duct Type ..... 5 FXDQ-P/FXDQ-N(A) 113

Ceiling Mounted Built-In Type ..... 6 FXSQ-M 151

Ceiling Mounted Duct Type ..... 7 FXMQ-MA 197

Ceiling Suspended Type ..... 8 FXHQ-MA 221

Wall Mounted Type ..... 9 FXAQ-MA 239

Floor Standing Type / Concealed Floor Standing Type ..... 10 FXLQ-MA/FXNQ-MA 263

Ceiling Suspended Cassette Type (Connection Unit Series) 11 FXUQ-MA 287

Part 3 Outdoor Units 323

Heat Pump (50/60Hz)
Cooling Only (50/60Hz) ..... 12 RX(Y)MQ-P 325

Part 4 Installation of Outdoor Units 13 355

Part 5 Control 14 373

Part 6 Guide Specification 15 551

1. Introduction

Preface

Along higher quality building environment and more sophisticated building function, there is now a greater demand for system expansion for a flexible air-conditioning system capable of finer air-conditioning, thus increasing importance of individual air-conditioning systems. On the other hand, due to social significance of environmental and energy problems, elements such as energy-efficiency and low maintenance are still strongly desired.

Daikin is the sole air conditioning company in the world that manufactures every component from refrigerant to complete air conditioning systems itself. Our commitment to offering the best for people as well as the environment inspires us to develop new systems that make the most effective use of energy resources and protect the ozone layer.
Daikin, the first in the industry to develop the VRV system, has now enhanced the R-410A with the Inverter that features a capacity of 4, 5, 6 horsepower, a new addition to the VRV system to further refine all the features of the current VRV system.

This publication contains a variety of information related to the design and installation of this new VRV System. We hope this information will serve to deepen your understanding of the system, and will help you to efficiently develop its highly evolved characteristics.

DAIKIN INDUSTRIES, LTD
Global Operations Division

2. Publication History of VRV Engineering Data

Refrigerant	Type		Pub. : No.	Outdoor Units	Notes	Published In
R-410A	Air Cooled	■ INVERTER **M**	**ED39-436**	**50/60Hz H/P** RXYMQ4, 5, 6M	**VRV II-S** Heat Pump ■ New line up of 4, 5, 6HP outdoor units ■ New line up of FXDQ Indoor units	Jul. 2004
		■ INVERTER **P**	**ED34-635**	**50/60Hz H/P** RXYMQ4, 5, 6P **50/60Hz C/O** RXMQ4, 5, 6P	**VRV III-S** Heat Pump, Cooling Only ■ New line up of VRV III-S System ■ Minor change of Indoor Units from M to MA ■ Model change of Remote Controller as follows BRC1A61, 62 BRC8A61 →**BRC1C62**	Jul. 2006
		■ INVERTER **M**	**ED39-226B**	**50Hz H/P** RXYQ5M~48M **50Hz H/R** REYQ8M~48M	**VRV II** Heat Pump, Heat Recovery Following change has been newly added to ED39-226B (Sep.2004) ■ DCS601B51→DCS601C51 (Model change) ■ Writing Error Correction	Mar. 2005
			ED39-526	**50Hz H/R** REYQ8M~48M	**VRV II** Heat Recovery Separation of Heat Recovery Series from ED39-226B	Feb. 2006
			ED35-511B	**50/60Hz H/P** RXYQ8~30MY1K(E) RXYQ8~30MYLK(E)	**VRV II** Heat Pump for High outdoor temperature. Following change has been newly added to ED35-511A ■ Minor change of Indoor Units from M to MA ■ Model change of Remote Controller as follows BRC1A61, 62 BRC8A61 →**BRC1C62**	Jul. 2006
		■ INVERTER **MA**	**ED39-428B**	**50/60Hz H/P** RXYQ5MA~48MA **50Hz C/O** RXQ5MA~48MA	**VRV II** Heat Pump, Cooling Only ■ New line up of 60Hz Heat Pump outdoor units to ED39-428A	Oct. 2005
		■ INVERTER **P**	**ED34-645A**	**50Hz H/P** Normal Series RXYQ5P~54P High COP Series RXYQ16PH~50PH	**VRV III** Heat Pump ■ Revision of followings to ED34-645 ■ Review of the Capacity of Specifications. ■ Addition of Installation Manual. ■ Review of the piping length.	Jul. 2006
	Water Cooled	■ INVERTER **M**	**ED30-442B**	**50Hz H/P** RWEYQ10, 20, 30M **50Hz H/R** Y1	**VRV-W II** Heat Pump, Heat Recovery Following change has been newly added to ED30-442A ■ Minor change of Indoor Units from M to MA ■ Model change of Remote Controller as follows BRC1A61, 62 BRC8A61 →**BRC1C62**	May. 2006
			ED30-653	**60Hz H/P** RWEYQ10, 20, 30M **60Hz H/R** YL, TL	**VRV-W II** Heat Pump, Heat Recovery 60Hz	Apr. 2006
R-22	Air Cooled	■ INVERTER **K-K**	**ED35-211**	**50/60Hz** RXY 16K-K~30K-K **50/60Hz** RX 16K-K~30K-K	**VRV** Heat Pump, Cooling Only ■ For High Outdoor Temperature up to 50°CDB ■ For Saudi Arabia and Middle East	Nov. 2002
		■ INVERTER **M**	**ED38-225C**	**50/60Hz H/P** RXY5M~48M **50Hz C/O** RX5M~48M	**VRV II** Heat Pump, Cooling Only Following change has been newly added to ED38-225B ■ FXD20~32P (Additional) ■ Model change of Remote Controller as follows BRC1A61, 62 BRC8A61 →**BRC1C62** ■ VAM150~2000FA→VAM150~2000GJ (Model change)	Jun. 2006
			ED38-329	**50/60Hz H/P** RXYM4, 5, 6M **50Hz C/O** RXM4, 5, 6M	**VRV II-S** Heat Pump, Cooling Only ■ New line up of 4, 5, 6HP outdoor units ■ New line up of FXD Indoor units	Jan. 2004
For All Types			**OH06-1**	For Indoor and Outdoor Units.	**Option Handbook**	Jul. 2006

This time we publish **ED34-635** as shown by ▒ .

H/P : Heat Pump
H/R : Heat Recovery
C/O : Cooling Only

Note: The reference number "(V○○○○)" are noted on each figures in this book however they are only used for printing convenience.

3. Step by Step VRV System Selection Process (Reference)

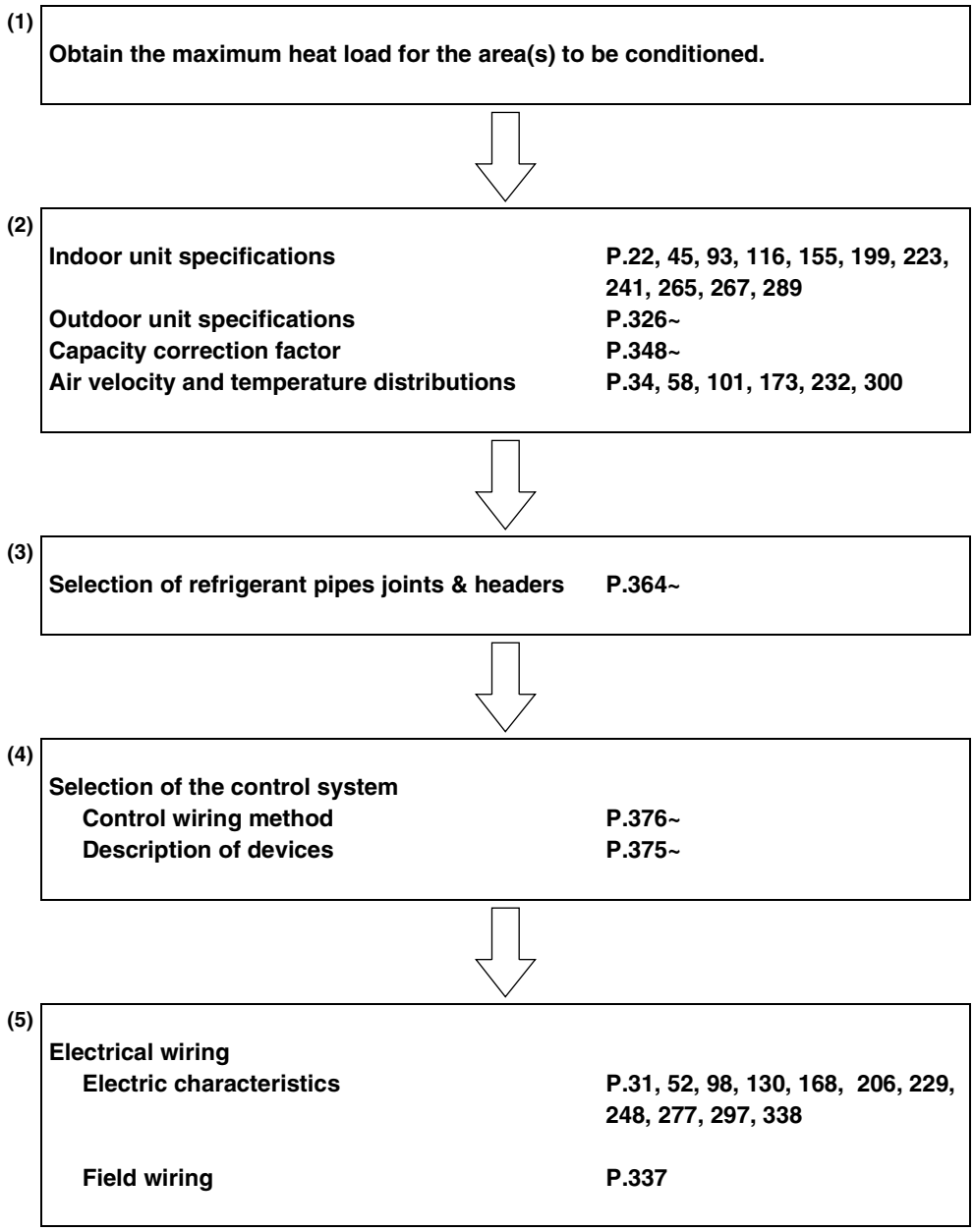

Caution

1. Air conditioners should not be installed in areas where corrosive gases, such as acid gas or alkaline gas, are produced.
2. If the outdoor units is to be installed close to the sea shore, direct exposure to the sea breeze should be avoided.
3. Refer to the latest drawing numbers.

Part 1
General Information

1. Model Names of Indoor/Outdoor Units....2
2. External Appearance....3
   2.1 Indoor Units....3
   2.2 Outdoor Units....3
3. Nomenclature....4
4. Capacity Range....6
5. Features....7
   5.1 Technologies....7
   5.2 Design Flexibility....8
   5.3 Easy Installation....9
   5.4 Easy Maintenance....9
   5.5 Space Saving....10
   5.6 Energy Efficiency and Quiet Operation....11
   5.7 Control Systems....12
   5.8 Advanced Control Systems....14

1. Model Names of Indoor/Outdoor Units

Indoor Units

Type		Model Name									Power Supply
Ceiling Mounted Cassette Type (Double Flow)	FXCQ	20M	25M	32M	40M	50M	63M	80M	—	125M	
Ceiling Mounted Cassette Type (Multi Flow)	FXFQ	—	25M	32M	40M	50M	63M	80M	100M	125M	
Ceiling Mounted Cassette Corner Type	FXKQ	—	25MA	32MA	40MA	—	63MA	—	—	—	
Slim Ceiling Mounted Duct Type	FXDQ-PVE	20P	25P	32P	—	—	—	—	—	—	
	FXDQ-PVET	20P	25P	32P	—	—	—	—	—	—	
	FXDQ-NAVE	20NA	25NA	32NA	40NA	50NA	63NA	—	—	—	
	FXDQ-NVET	20N	25N	32N	40N	50N	63N	—	—	—	VE *1
Ceiling Mounted Built-In Type	FXSQ	20M	25M	32M	40M	50M	63M	80M	100M	125M	
Ceiling Mounted Duct Type	FXMQ	—	—	—	40MA	50MA	63MA	80MA	100MA	125MA	
Ceiling Suspended Type	FXHQ	—	—	32MA	—	—	63MA	—	100MA	—	
Wall Mounted Type	FXAQ	20MA	25MA	32MA	40MA	50MA	63MA	—	—	—	
Floor Standing Type	FXLQ	20MA	25MA	32MA	40MA	50MA	63MA	—	—	—	
Concealed Floor Standing Type	FXNQ	20MA	25MA	32MA	40MA	50MA	63MA	—	—	—	
Ceiling Suspended Cassette Type	FXUQ	—	—	—	—	—	—	71MA	100MA	125MA	V1
Connection Unit	BEVQ-M(A)	—	—	—	—	—	—	71MA	100MA	125MA	VE *1

Note: FXDQ has following 2 Series, as shown below.

FXDQ-P, N(A)VET: without Drain Pump (For General, Asia: except for EU, China and Australia)

FXDQ-P, N(A)VE: with Drain Pump

BEV unit is required for each indoor unit.

V1:1ϕ, 220~240V, 50Hz

*1 VE:1ϕ, 220~240V, 50Hz, 1ϕ, 220V, 60Hz

Outdoor Units

Series			Model Name			Power Supply
Inverter	Heat Pump	RXYMQ	4P	5P	6P	VE *2
	Cooling Only	RXMQ	4P	5P	6P	VE *2

*2 VE: 1ϕ, 220~230V, 50Hz, 1ϕ, 220V, 60Hz

2. External Appearance

2.1 Indoor Units

Ceiling Mounted Cassette Type (Double Flow)

FXCQ20M
FXCQ25M
FXCQ32M
FXCQ40M
FXCQ50M
FXCQ63M
FXCQ80M
FXCQ125M



Ceiling Suspended Type

FXHQ32MA
FXHQ63MA
FXHQ100MA



Ceiling Mounted Cassette Type (Multi Flow)

FXFQ25M
FXFQ32M
FXFQ40M
FXFQ50M
FXFQ63M
FXFQ80M
FXFQ100M
FXFQ125M



Wall Mounted Type

FXAQ20MA
FXAQ25MA
FXAQ32MA
FXAQ40MA
FXAQ50MA
FXAQ63MA



Ceiling Mounted Cassette Corner Type

FXKQ25MA
FXKQ32MA
FXKQ40MA
FXKQ63MA



Floor Standing Type

FXLQ20MA
FXLQ25MA
FXLQ32MA
FXLQ40MA
FXLQ50MA
FXLQ63MA

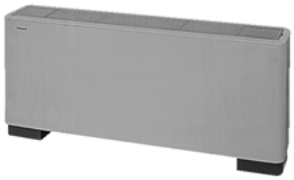

Slim Ceiling Mounted Duct Type

FXDQ20P FXDQ20N(A)
FXDQ25P FXDQ25N(A)
FXDQ32P FXDQ32N(A)
FXDQ40N(A)
FXDQ50N(A)
FXDQ63N(A)

with Drain Pump (VE)
without Drain Pump (VET)



Concealed Floor Standing Type

FXNQ20MA
FXNQ25MA
FXNQ32MA
FXNQ40MA
FXNQ50MA
FXNQ63MA



Ceiling Mounted Built-In Type

FXSQ20M
FXSQ25M
FXSQ32M
FXSQ40M
FXSQ50M
FXSQ63M
FXSQ80M
FXSQ100M
FXSQ125M



Ceiling Suspended Cassette Type (Connection Unit Series)

FXUQ71MA + BEVQ71MA
FXUQ100MA + BEVQ100MA
FXUQ125MA + BEVQ125MA

Connection Unit



Ceiling Mounted Duct Type

FXMQ40MA
FXMQ50MA
FXMQ63MA
FXMQ80MA
FXMQ100MA
FXMQ125MA



2.2 Outdoor Units

RX(Y)MQ4PVE
RX(Y)MQ5PVE
RX(Y)MQ6PVE



3. Nomenclature

Indoor Unit

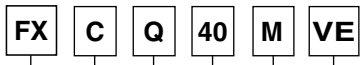

Power Supply Symbol
VE : Single Phase 220 to 240V, 50Hz : 220V, 60Hz
V1 : Single Phase 220 to 240V, 50Hz

Indicates Major Design Category
M : Standard
MA : Standard (RoHS Applied Models)

Capacity Indication
Conversion to Horsepower:

20 : 0.8 HP	50 : 2.0 HP	125 : 5 HP
25 : 1 HP	63 : 2.5 HP	
32 : 1.25 HP	80 : 3.2 HP	
40 : 1.6 HP	100 : 4 HP	

Refrigerant : R-410A

Type of Unit
C : Ceiling Mounted Cassette Type (Double Flow)
F : Ceiling Mounted Cassette Type (Multi Flow)
D : Slim Ceiling Mounted Duct Type
K : Ceiling Mounted Cassette Corner Type
U : Ceiling Suspended Cassette Type
S : Ceiling Mounted Built-In Type
M : Ceiling Mounted Duct Type
H : Ceiling Suspended Type
A : Wall Mounted Type
L : Floor Standing Type
N : Concealed Floor Standing Type

Indicates that this is VRV system indoor unit.

Connection Unit

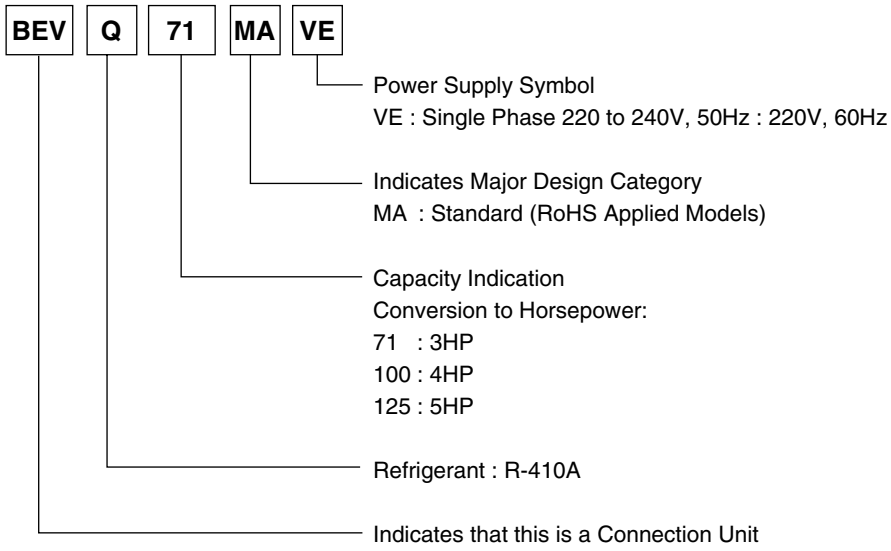

Outdoor Unit

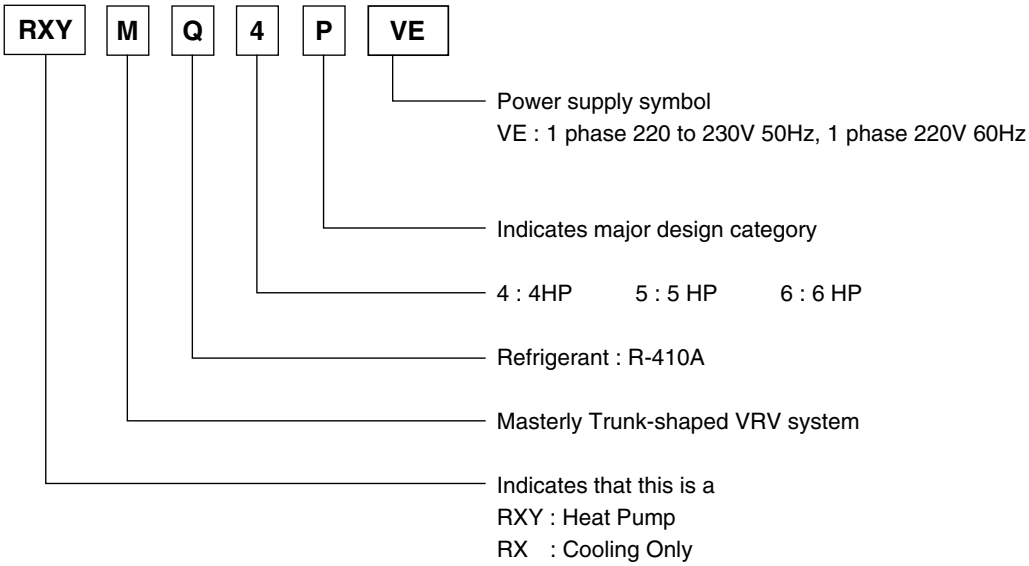

4. Capacity Range

Outdoor Units

Capacity Range	4HP	5HP	6HP
RX(Y)MQ	4P	5P	6P
No of Indoor Units to be Connected	6	8	9
Total Capacity Index of Indoor Units to be Connected	50~130	62.5~162.5	70~182

Indoor Units

Capacity Range		0.8HP	1HP	1.25HP	1.6HP	2HP	2.5HP	3.2HP	4HP	5HP
Capacity Index		20	25	31.25	40	50	62.5	80	100	125
Ceiling Mounted Cassette Type (Double Flow)	FXCQ	20M	25M	32M	40M	50M	63M	80M	—	125M
Ceiling Mounted Cassette Type (Multi Flow)	FXFQ	—	25M	32M	40M	50M	63M	80M	100M	125M
Ceiling Mounted Cassette Corner Type	FXKQ	—	25MA	32MA	40MA	—	63MA	—	—	—
Slim Ceiling Mounted Duct Type	FXDQ-PVE	20P	25P	32P	—	—	—	—	—	—
	FXDQ-PVET	20P	25P	32P	—	—	—	—	—	—
	FXDQ-NAVE	20NA	25NA	32NA	40NA	50NA	63NA	—	—	—
	FXDQ-NVET	20N	25N	32N	40N	50N	63N	—	—	—
Ceiling Mounted Built-In Type	FXSQ	20M	25M	32M	40M	50M	63M	80M	100M	125M
Ceiling Mounted Duct Type	FXMQ	—	—	—	40MA	50MA	63MA	80MA	100MA	125MA
Ceiling Suspended Type	FXHQ	—	—	32MA	—	—	63MA	—	100MA	—
Wall Mounted Type	FXAQ	20MA	25MA	32MA	40MA	50MA	63MA	—	—	—
Floor Standing Type	FXLQ	20MA	25MA	32MA	40MA	50MA	63MA	—	—	—
Concealed Floor Standing Type	FXNQ	20MA	25MA	32MA	40MA	50MA	63MA	—	—	—
Ceiling Suspended Cassette Type	FXUQ	—	—	—	—	—	—	71MA	100MA	125MA

Note: FXDQ has following 2 Series, as shown below.

FXDQ-P, NVET: without Drain Pump (For General, Asia: except for EU, China and Australia)

FXDQ-P, NAVE: with Drain Pump

5. Features

5.1 Technologies

A collection of cutting-edge technologies realizes efficient and quiet operation.

New

Improving the high efficiency compressor to achieve a higher COP

1 Reluctance DC Scroll Compressor

Overheating losses are reduced by pressurizing the area around the motor, boosting energy saving performance in conjunction with other features.

High thrust mechanism

By introducing high pressure oil, the reactive force from the fixed scroll is added to the internal force, thereby reducing thrust losses. This results in improved efficiency and suppressed sound levels.

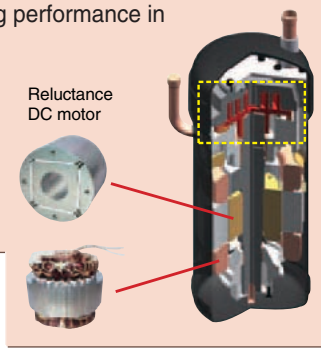

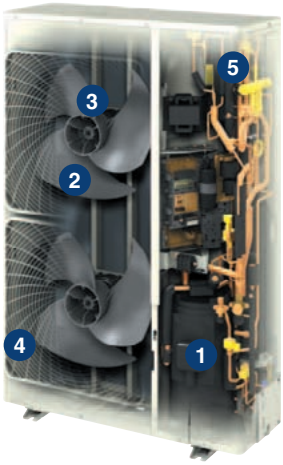

RX(Y)MQ4PVE
RX(Y)MQ5PVE
RX(Y)MQ6PVE

>> Powerful magnets

Use of neodymium magnets in the motor enables efficient generation of high torque, reducing the size of the compressor.

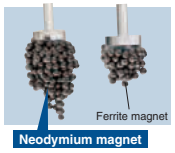

Neodymium magnets are much more powerful than the commonly used ferrite magnets.

>> Smooth sine wave DC inverter

Use of an optimized sine wave smoothes motor rotation, further improving operating efficiency.

Sine wave DC inverter

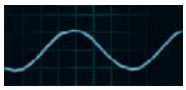

>> Stronger materials

The strength of the casing has been increased by boosting the internal dome pressure.

>> Optimal refrigerant configuration

Changes to the shape of the spiral and volume ratio result in optimal refrigerant layout.

2 Smooth Air Inlet Bell Mouth and Aero Spiral Fan

These two new features work to significantly reduce noise. Guides are added to the bell mouth intake to reduce turbulence in the airflow generated by fan suction. The new Aero Spiral Fan features fan blades with the bent blade edges, further reducing turbulence.

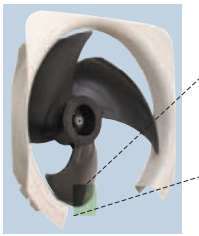

Neo aero spiral fan blade tips
Conventional **Newly developed**

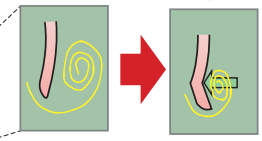

Escaping eddies are sucked in by the bent blade edges, reducing overall turbulence.

3 DC fan motor

Efficiency improved in all areas compared to conventional AC motors, especially at low speeds.

DC fan motor structure





DC motor efficiency
(comparison with a conventional AC motor)

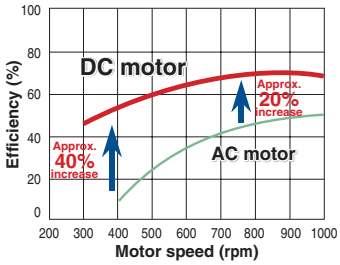

Note: Data are based on studies conducted under controlled conditions at a Daikin laboratory.

4 Super Aero Grille

Refined ventilation mechanism enables further reduction in required fan power.

5 SC heat exchanger

A larger sub-cooled area reduces refrigerant flow sound by making it easer to form a liquid seal in front of the electrical valve.

5.2 Design Flexibility

VRV III-S systems offer broad design flexibility with long refrigerant piping lengths and multiple indoor unit combinations, which provides generous freedom for office and shop design both inside and out.

As many as 9 indoor units can be connected to single outdoor unit

Multiple indoor unit combinations are possible*. As many as 9 indoor units can be connected to single outdoor unit, making the VRV III-S a remarkably versatile system.

* Indoor units can be connected up to 130% of the capacity of the outdoor unit.

For a 6 HP installation

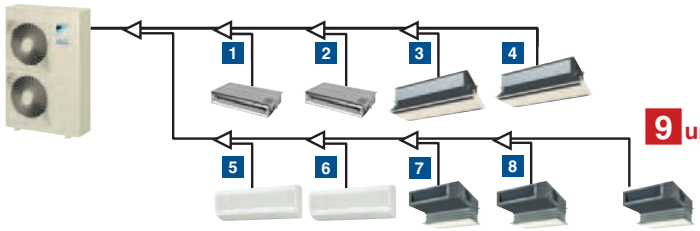

>> 8 indoor units for a 5 HP installation

>> 6 indoor units for a 4 HP installation

Long piping design possible

The VRV III-S provides the long piping length possibility of 150 m, with a total piping length of 300 m. If the outdoor unit is installed above indoor units the height difference can be up to a maximum of 50 m. These generous allowances facilitate an extensive variety of system designs.

Actual piping length
150 m

Total piping length
300 m

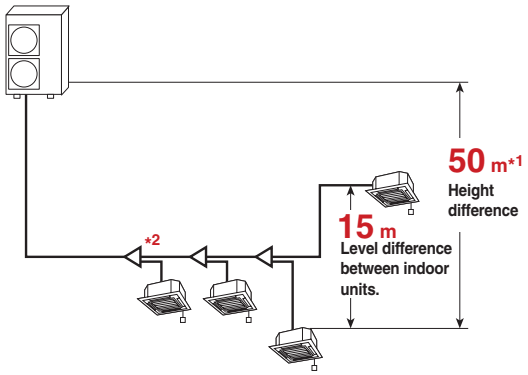

Note:*1. 40 m when the outdoor unit is installed below indoor units.
*2. Maximum piping length between the indoor unit and the first branch is 40 m.

Wide operating temperature range

The versatile operating range of the VRV III-S system works to reduce limitations on installation locations. The operating temperature range for heating goes all the way down to -20°C, while cooling can be performed with outdoor temperatures as high as 46°C. Both these achievements are due to the employment of a high-pressure dome-type compressor.

Outdoor temperature operating range

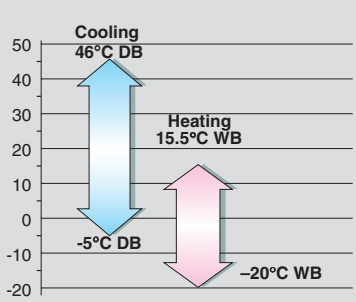

5.3 Easy Installation

A variety of functions are provided that make installation easier, such as simple wiring and piping and automatic test operation.

New Easy wiring

A new type of printed circuit board has been adopted that is much easier to see and wire during installation.

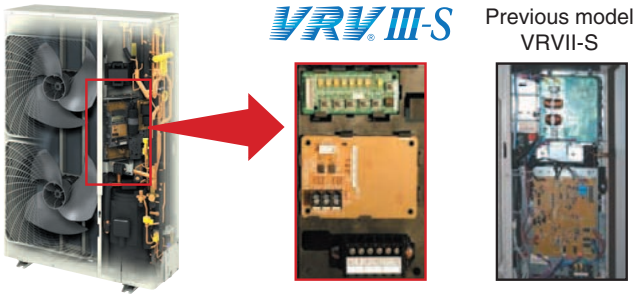

New Automatic test operation

Simply press the test operation button and the unit performs an automatic system check, including wiring, shutoff valves, sensors, and refrigerant volume. The results are returned automatically after the check finishes.

Simple wiring and piping connection

Unique piping and wiring systems make it possible to install a VRV III-S system quickly and easily.

>> Super wiring system

A super wiring system is used to enable shared use of the wiring between indoor and outdoor units and the central control wiring, with a relatively simple wiring operation. The DIII-NET communication system is employed to enable the use of advanced control system.

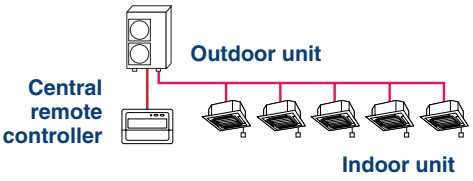

>> REFNET piping system

Daikin's advanced REFNET piping system makes installation easy. Only two main refrigerant lines are required in any one system. REFNET greatly reduces the imbalances in refrigerant flow between units, while using small-diameter piping.

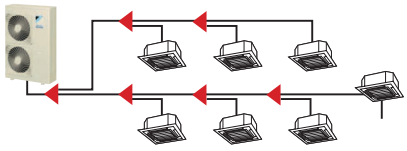

5.4 Easy Maintenance

VRV III-S features a self-diagnosis function for outdoor units that can determine the status of each component. Also, a new memory function helps to identify the problem if a malfunction occurs.

New Memory function for operation data

Operating data for the preceding 3 minutes is automatically stored in memory. Should a malfunction occur, this speeds up the process of identifying and fixing the cause of the problem.

5.5 Space Saving

Slim, compact and sufficient capacity

The VRV III-S is highly space saving, featuring slim and compact outdoor units. It is suitable for small offices and shops with capacities of 4, 5 and 6 HP.

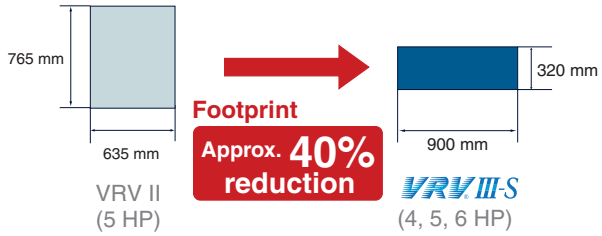

VRV II (5 HP)

VRV III-S (4, 5, 6 HP)



VRV II (5 HP)

VRV III-S (4, 5, 6 HP)

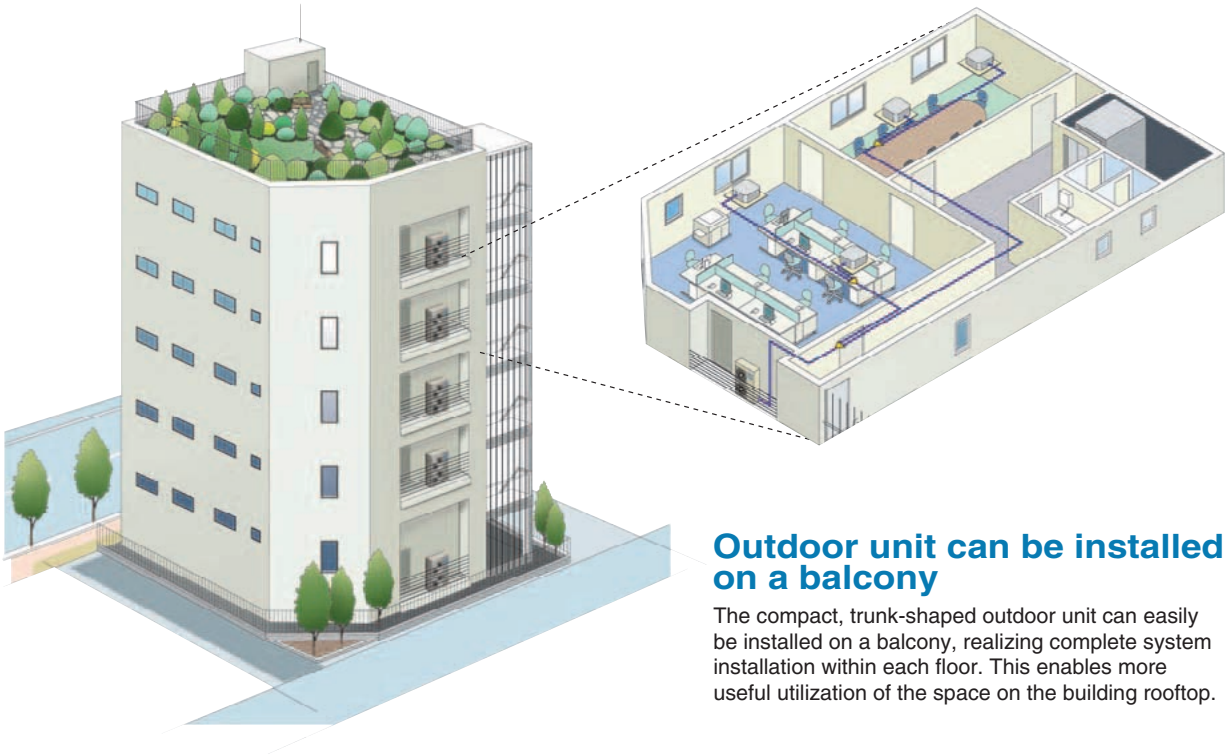

Outdoor unit can be installed on a balcony

The compact, trunk-shaped outdoor unit can easily be installed on a balcony, realizing complete system installation within each floor. This enables more useful utilization of the space on the building rooftop.

5.6 Energy Efficiency and Quiet Operation

Outdoor units have been newly designed using the new compressor to realize energy saving performance and quiet operation.

Improved

Higher COP during both cooling and heating operations

One of the top features of the VRV III-S is its energy efficiency. It achieves high COP during cooling and heating operations by employing the new compressor.

Higher COP achieved in all ranges!

		VRVII-S Previous model RXYM-MVM	VRV III-S
Cooling	4 HP	3.65	3.67
	5 HP	3.28	3.41
	6 HP	2.92	3.36
Heating	4 HP	3.68	3.73
	5 HP	3.41	3.80
	6 HP	3.19	3.63

Above values are based on the following nominal conditions:
Note: • 2 build-in units are connected (4 HP: FXFQ50M x 2; 5 HP: FXFQ63M x 2; and 6 HP: FXFQ63M + FXFQ80M.)
• Indoor temp. of 27°C DB/19°C WB, and outdoor temp. of 35°C DB.

Improved ★

Quiet operation provides luxurious comfort

Quietness is yet another important feature of Daikin's VRV III-S system. To reduce noise and realize comfortable operation, latest technologies and features are applied to the outdoor units.

★ For 4 and 5 HP cooling operations only.

Lower operation sound is achieved in cooling operation!

1 dB reduced in each model!

		VRVII-S Previous model RXYM-MVM		VRV III-S
Cooling	4 HP	51	-1dB	50
	5 HP	52	-1dB	51

Nighttime quiet operation function

Operation sound level selectable from 3 steps for the night mode

Mode 1. Automatic mode

Set on the outdoor PCB. Time of maximum temperature is memorized. The low operating mode will become active 8 hours*2 after the peak temperature in the daytime, and operation will return to normal 10 hours*3 after that. The operation sound level for the night mode can be selected from 47 dB (Step 1), 44 dB (Step 2) and 41 dB (Step 3).

Mode 2. Manual mode

Starting time and ending time can be input. (External control adaptor for outdoor unit, DTA104A61 or DTA104A62, and a subsequently obtained timer are necessary.)

Mode 3. Combined mode

Combination of mode 1 and 2 can be used depending on your needs.

*1. Determine which mode to select depending on the climatic characteristics of each country.
*2. Initial setting. Can be selected from 6, 8 and 10 hours.
*3. Initial setting. Can be selected from 8, 9 and 10 hours.

Mode 1. Automatic mode

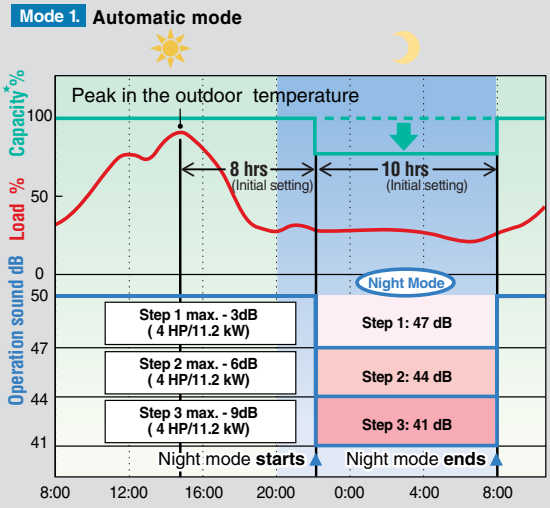

Note: • This function is available in setting at site.
• The relationship of outdoor temperature (load) and time shown in the graph is just an example.
* The capacity reduction rate differs depending on the operation sound level step selected.

5.7 Control Systems

Individual Control Systems

Wired remote controller (Optional)



BRC1C62

- Easier to read because LCD screen is larger.
- Digital display lets you set temperature in 1˚C units.
- Lets you individually program by timer the respective times for operation start and stop within a maximum of 72 hours.
- Equipped with a thermostat sensor in the remote controller that makes possible more comfortable room temperature control.
- Enables you to select cool/heat/fan operation mode with the indoor remote controller of your choice without using the cool/heat selector.
- Constantly monitors malfunctions in the system for 80 items, and is equipped with a "self-diagnosis function" that lets you know by message immediately when a malfunction occurs.
- Lets you carry out various field settings by remote controller.
- The rubber switch and the oil-resisting resin casing have been adopted for durability.

* When the auto-swing function is not available, the message, THIS FUNCTION IS NOT AVAILABLE is displayed when the wind direction adjustment button is pressed.

The wired remote controller supports a wide range of control functions

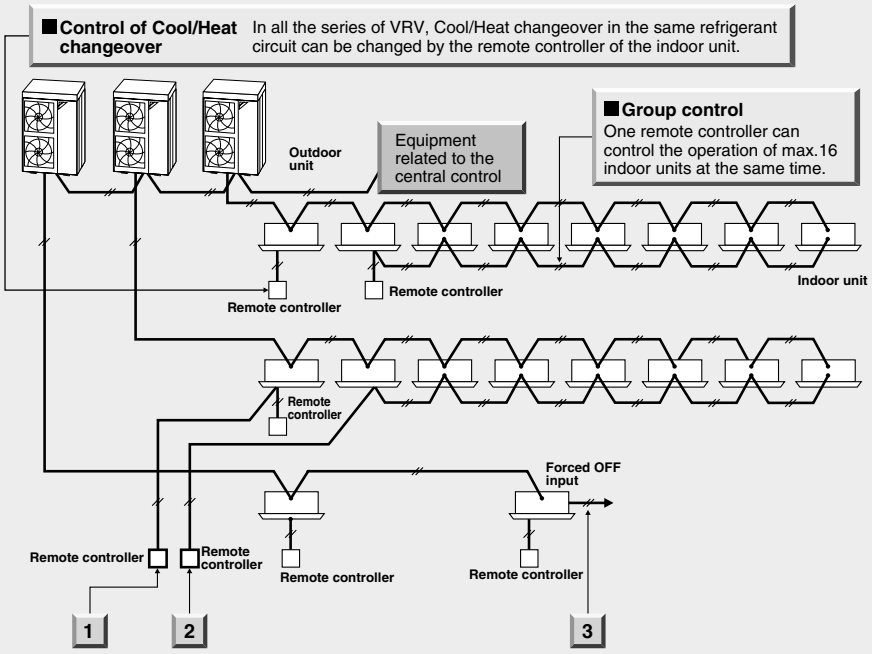

1 Control by two remote controller

The indoor unit can be connected by the two remote controller, for example one in the room and the other one in the control room, which can control the operation of indoor unit freely. (The last command has a priority.) Of course, the group control by two remote controller is also possible.

2 Remote control

The wiring of remote controller can be extended to max.500m and it is possible to install the remote controllers for the different indoor units in one place.

3 Expansion of system control

The system can be expanded to add several controllers, such as BMS, Forced OFF input and etc.

Wired remote Controller with weekly schedule timer (Optional)



BRC1D61

Adds new, advanced functions to those of the above wired remote controller.

- 24-hour clock function (1-hour backup for power failures)
- Programming function for each day of week.
- Scheduling possible of start/stop and temperature limit (5 settings/day)
- Programming can be enabled or disabled.
- Copy function for programmed schedules.

Notes: 1. Standard remote controllers (BRC1C62) not required.
2. If the BRC1D61 is connected to the centralized remote controller, the schedule function is not available.

Wireless remote controller (Optional)



Wireless remote controller


Signal receiver unit
(Separate type)

- The same operation modes and settings as with wired remote controllers are possible.
- A compact light receiving unit to be mounted into a wall or ceiling is included.
  - A light receiving unit for a ceiling-mounted cassette (double-flow, multi-flow) type, ceiling-suspended type and wall-mounted type is mounted into the indoor unit.



Signal receiving unit can be installed on the panel
ex. Ceiling mounted cassette (multi-flow) type

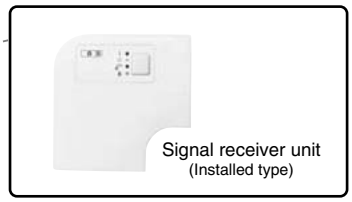

Simple remote controller (Optional)


Exposed type
BRC2C51


Concealed type
(For hotel use)
(BRC3A61)

- The remote controller has centralized its frequently used operation selectors and switches (on/off, operation mode, temperature setting and airflow volume), making itself suitable for use in hotel rooms or conference rooms.
- The exposed type remote controller is fitted with a thermostat sensor.


The concealed-type remote controller smartly fits into a night table or console panel in a hotel room.

Wide variation of remote controllers for indoor units

	FXCQ	FXFQ	FXKQ	FXDQ	FXSQ	FXMQ	FXHQ	FXAQ	FXL(N)Q	FXUQ
Wired remote controller	●	●	●	●	●	●	●	●	●	●
Wired remote controller with weekly shedule timer	●	●	●	●	●	●	●	●	●	●
Wireless remote controller (Installed signal receiver unit)	●	●					●	●		●
Wireless remote controller (Separate type signal receiver unit)			●	●	●	●			●	
Simple remote controller (Exposed type)				●	●	●			●	
Simple remote controller (Concealed type: for Hotel use)				●	●	●			●	

5.8 Advanced Control Systems

touch intelligent Controller

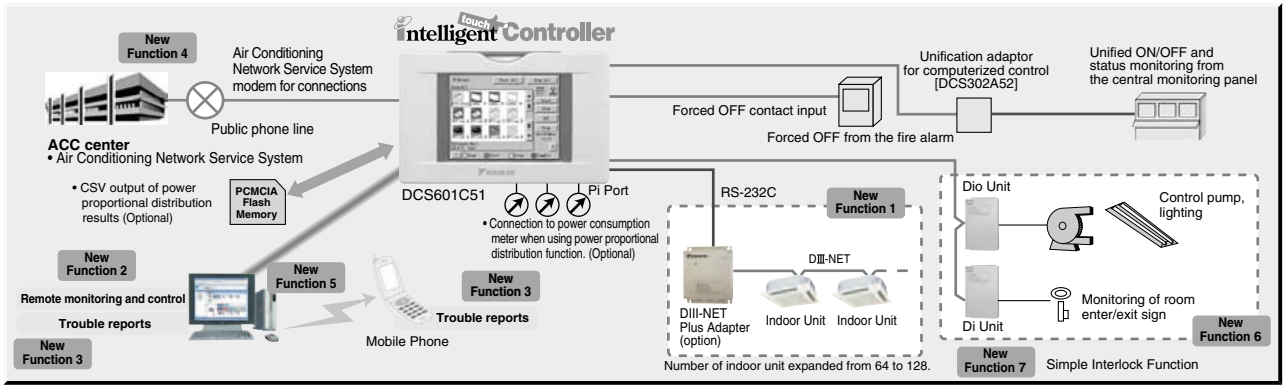

New communication functions in the user-friendly icon-based multilingual controller simplify centralized control of the VRV system.

- Color LCD touch panel icon display
- Small manageable size
- Simplified engineering
- Multi language (English, French, Italian, German, Spanish and Chinese)
- Yearly schedule
- P.P.D. (Power Proportinal Distribution function) (Optional)
- Auto heat/cool change-over
- Temperature limitation
- History of 500 actions
- Air Conditioning Network Service System (Optional Maintenance Service)
- Simple Interlock Function

New Functions

New Function 1	**Doubling of number of control points by adding a DIII-NET Plus Adapter** (Optional)
New Function 2	**Support for centralized control from elsewhere using a PC with a Web browser** (Optional)
New Function 3	**Sending of e-mail alerts to a specified address when malfunctions occur** (Optional)
New Function 4	**Built-in modem for connecting to Airnet Service System** (Optional)
New Function 5	**Built-in Ethernet port for connecting to the Internet or an intranet**
New Function 6	**Management of facilities / equipment other than A/C units**(Compatible with Dio unit and Di unit)
New Function 7	**Simple Interlock Function**

Interface for BACnet® and LONWORKS®

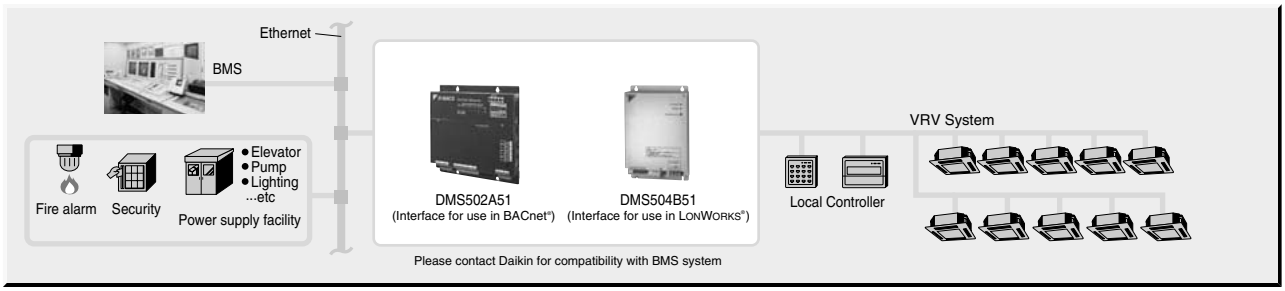

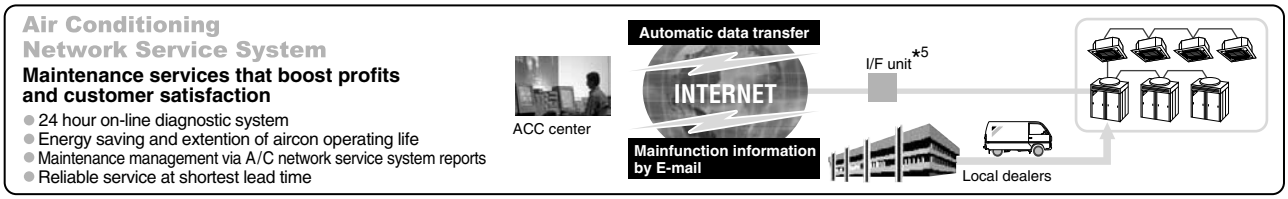

★1. There are restrictions in applicable areas and release times, therefore please consult us separately for details.
★2. Model name varies upon the system size.
★3. BACnet® is a registered trademark of American Society of Heating, Refrigerating and Air-Conditioning Engineers (ASHRAE).
★4. LONWORKS® is a registered trade mark of Echelon Corporation.
★5. For an I/F unit, one of the following can be selected: ***Local Controller***, intelligent touch Controller, or intelligent Manager II.
★6. Ethernet is a registered trademark of Xerox Corporation.
★7. Refer to the Options page for the name of each model.

Integrated control systems that recognize the trend of open control systems

■ Compatibility with BMS enhanced by utilizing the international communication standards, BACnet® or LONWORKS®.

DMS504B51 Interface for use in LONWORKS®

■ XIF file for confirming of specifications of the units.
■ Connectable up to 10 outside units and 64 indoor unit groups.

DMS502A51 Interface for use in BACnet®

■ Conformance class 3 (ASHRAE 135–1995)
■ Standard BACnet® Device B-ASC (ASHRAE 135–2001)
■ BACnet® OPC server compatibility
■ BACnet®/IP over Ethernet
■ Up to 40 outside units and 256 indoor uit groups on one gateway. (optional adapter)

New intelligent Manager III

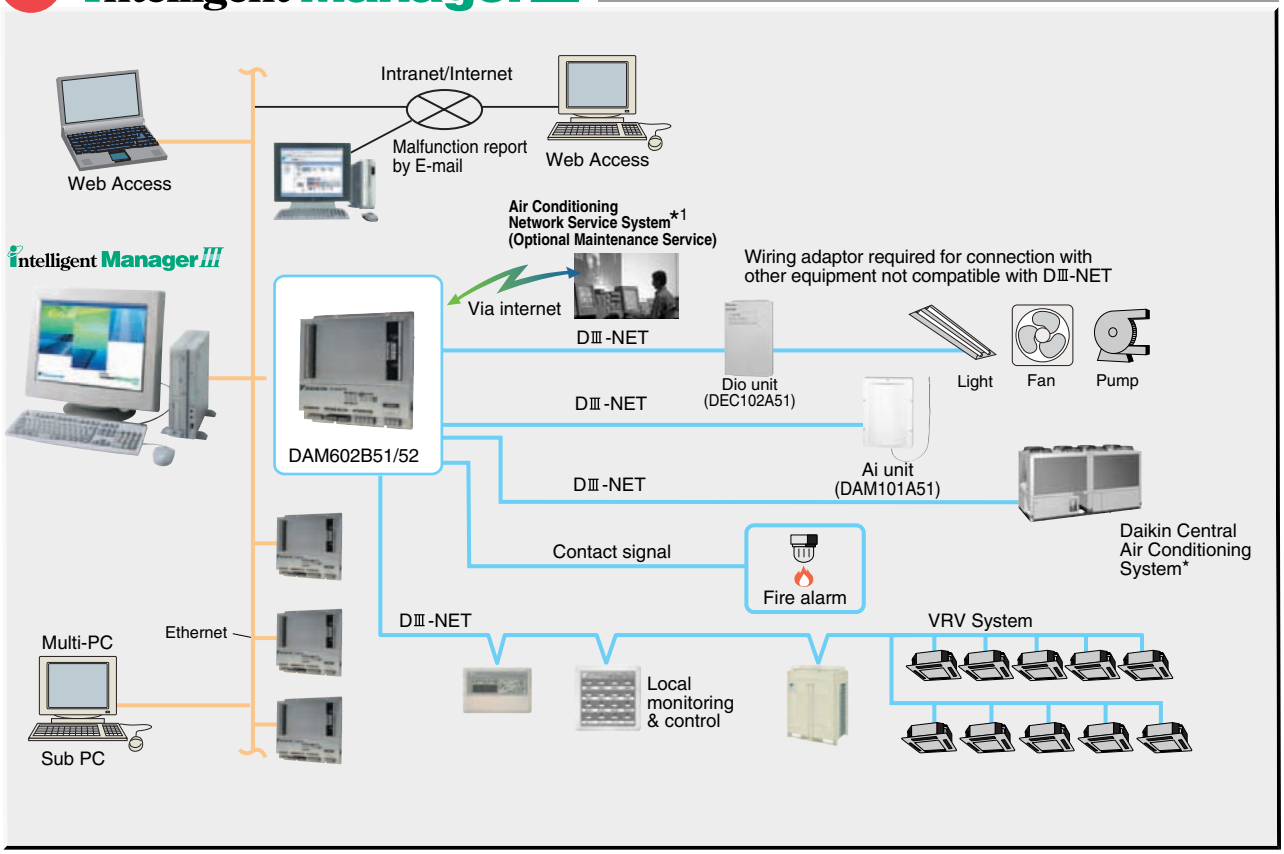

*Interfacing requirements vary depending on model, and some systems may not be suitable. Please contact your distributor for details.
• Information on these systems is preliminary only. Please contact Daikin for formal information on the products.

Centralized control system for easy provision of effective control and monitoring of VRV system functions

Special Functions

• Features control and monitoring functions for central A/C products and an Air Conditioning Network Service function.
• Using an external contact via DIII-NET, monitors and controls equipment such as lighting, fans, or building security systems.

- Floor visual navigation
- Graphical report
- Multi-PC access
- Analogue interlock
- Automatic heat/cool change-over
- Temperature limitation
- Sliding temperature <Optional (DAM101A51) unit required>
- Energy saving function (ECO mode. Power limit control) (Optional)
- Air Conditioning Network Service System (Optional Maintenance Service)

New Functions

- **Monitor and control from the remote site by Web browser (Optional)**
- **PPD data can be managed from the remote site by Web browser (Optional)**
- **Send malfunction report through the Internet by E-mail (Optional)**
- **Compliant with the RoHS Directive (DAM602B51/52)(refer to page 763 for details.)**

Part 2
Indoor Units

FXCQ-M
Ceiling Mounted Cassette Type
(Double-Flow) 19

FXFQ-M
Ceiling Mounted Cassette Type
(Multi-Flow) 43

FXKQ-MA
Ceiling Mounted Cassette Corner Type 91

FXDQ-P / FXDQ-N(A)
Slim Ceiling Mounted Duct Type
(with Drain Pump / without Drain Pump) 113

FXSQ-M
Ceiling Mounted Built-In Type 151

FXMQ-MA
Ceiling Mounted Duct Type. 197

FXHQ-MA
Ceiling Suspended Type 221

FXAQ-MA
Wall Mounted Type 239

FXLQ-MA / FXNQ-MA
Floor Standing Type /
Concealed Floor Standing Type 263

FXUQ-MA
Ceiling Suspended Cassette Type
(Connection Unit Series). 287

FXCQ-M
Ceiling Mounted Cassette Type (Double-Flow)

1. Features 20
2. Specifications 22
3. Dimensions 24
4. Piping Diagrams 28
5. Wiring Diagrams 29
6. Electric Characteristics 31
7. Capacity Tables 32
   7.1 Cooling Capacity 32
   7.2 Heating Capacity 33
8. Air Velocity and Temperature Distributions (Reference Data) 34
9. Sound Levels 36
10. Installation 37
11. Accessories 40

1. Features

= Drastic change of performance, function and design =



Line-up
FXCQ20MVE~FXCQ125MVE

<Features>

Compactness

- Lowest height in the industry with whisper quietness

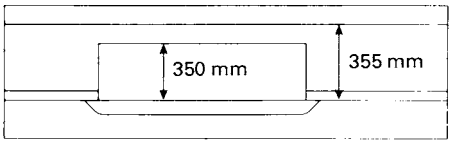

(V0030)

Low operation sound
Less weight

Improvement in installation and design flexibility

- Reduction of weight of both main unit and panel
- Standardized sectional module
- Matching the center of main unit and panel

Less maintenance

- Flat type suction grille of easy cleaning
- Detachable blade
- To minimize the soiling of the ceiling

<Details>

(1) Main technical improvement for compactness

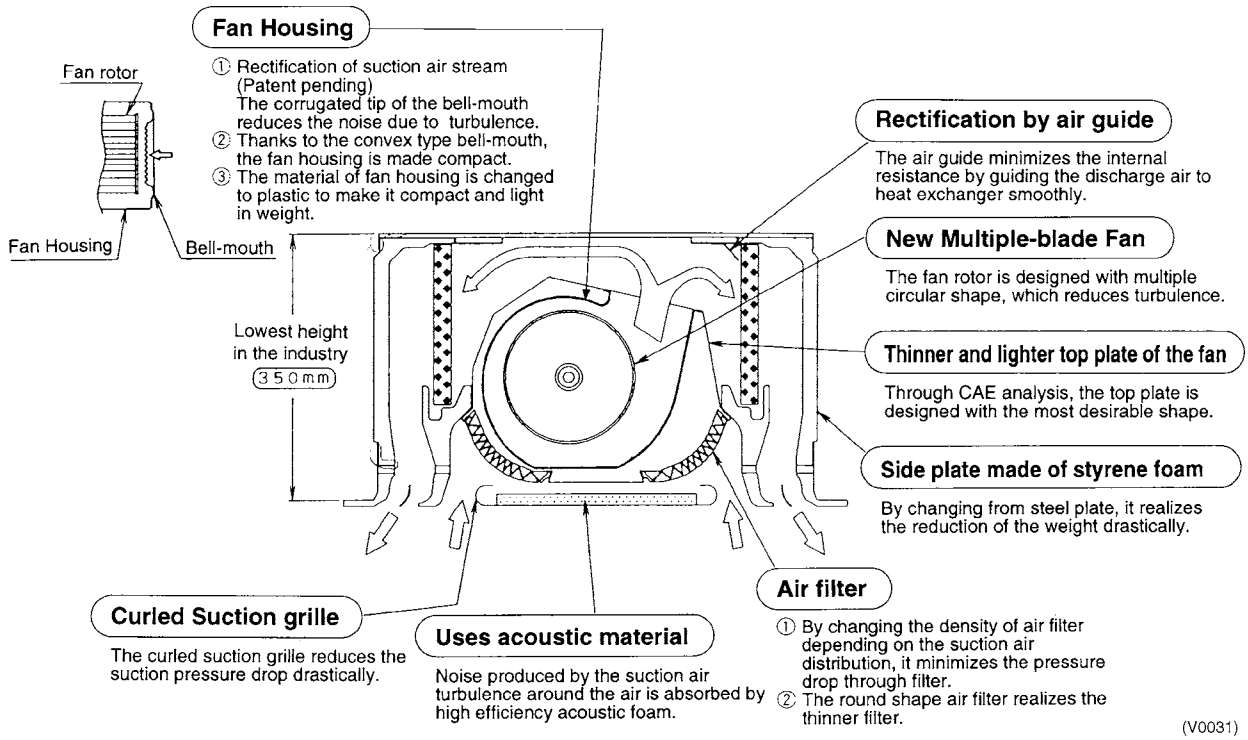

(V0031)

(2) Improvements for facilitating the installation and maintenance

Facilitating the installation

- **Lighter in weight**
  (Main unit and panel)
- **Center of the ceiling opening and the unit.**
  The same position
- **Checking the drainage flow**
  The cover of inspection hatch is detachable with one touch.
- **Facilitating the checking of drainage**

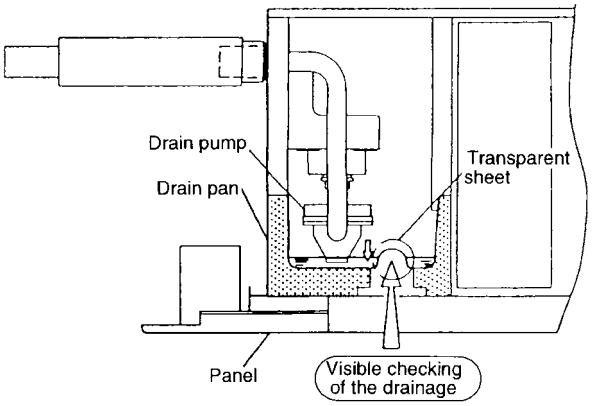

Facilitating the maintenance

- **Soiling of the ceiling**
  About 1/5 of the conventional model
- **Cleaning of the suction grille**
  Easy to clean because of flat shape
- **Cleaning of the air discharge flap (Detachability)**
  The flap can be detached with one touch without removing the panel
- **Detachment of air discharge flap**

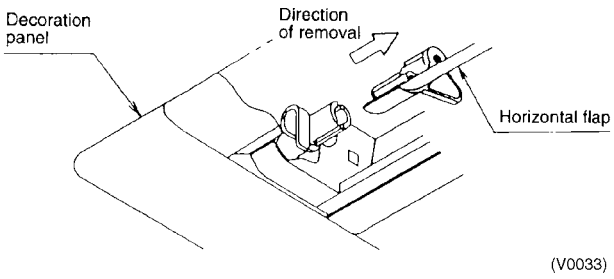

- **2 different positions of auto-swing for more comfort.**

Position of Auto-Swing	Standard Position	Ceiling Soiling Prevention Position
Operation of Auto-Swing	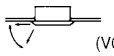 (V0034) Flaps swing within the range of 0°~60°	
5 Steps of Direction	 (V1226) 5 steps within the range of 0°~60°	 (V0036) 5 steps within the range of 45°~60°
Prevention of Draft	 (V0037) Prevents cold draft (heating operation)	—
Auto-set Air Direction	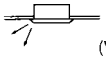 (V0038) The position of flaps is automatically set at the position of previous operation. (Initial position is 30° for cooling, and 60° for heating.)	

2. Specifications

Ceiling Mounted Cassette Type (Double-Flow)

Model			FXCQ20MVE	FXCQ25MVE	FXCQ32MVE	FXCQ40MVE
∗1 Cooling Capacity (19.5°CWB)		kcal/h	2,000	2,500	3,200	4,000
		Btu/h	7,800	9,900	12,600	16,000
		kW	2.3	2.9	3.7	4.7
∗2 Cooling Capacity (19.0°CWB)		kW	2.2	2.8	3.6	4.5
∗3 Heating Capacity		kcal/h	2,200	2,800	3,400	4,300
		Btu/h	8,500	10,900	13,600	17,100
		kW	2.5	3.2	4.0	5.0
Casing			Galvanized Steel Plate	Galvanized Steel Plate	Galvanized Steel Plate	Galvanized Steel Plate
Dimensions: (H×W×D)		mm	305×775×600	305×775×600	305×775×600	305×990×600
Coil (Cross Fin Coil)	Rows×Stages×Fin Pitch	mm	2×10×1.5	2×10×1.5	2×10×1.5	2×10×1.5
	Face Area	m²	2×0.100	2×0.100	2×0.100	2×0.145
Fan	Model		D17K2AA1	D17K2AB1	D17K2AB1	2D17K1AA1
	Type		Sirocco Fan	Sirocco Fan	Sirocco Fan	Sirocco Fan
	Motor Output × Number of Units	W	10×1	15×1	15×1	20×1
	Air Flow Rate (H/L)	m³/min	7/5	9/6.5	9/6.5	12/9
		cfm	247/177	318/230	318/230	424/318
	Drive		Direct Drive	Direct Drive	Direct Drive	Direct Drive
Temperature Control			Microprocessor Thermostat for Cooling and Heating	Microprocessor Thermostat for Cooling and Heating	Microprocessor Thermostat for Cooling and Heating	Microprocessor Thermostat for Cooling and Heating
Sound Absorbing Thermal Insulation Material			Glass Wool/Urethane Foam	Glass Wool/Urethane Foam	Glass Wool/Urethane Foam	Glass Wool/Urethane Foam
Piping Connections	Liquid Pipes	mm	ϕ6.4 (Flare Connection)	ϕ6.4 (Flare Connection)	ϕ6.4 (Flare Connection)	ϕ6.4 (Flare Connection)
	Gas Pipes	mm	ϕ12.7 (Flare Connection)	ϕ12.7 (Flare Connection)	ϕ12.7 (Flare Connection)	ϕ12.7 (Flare Connection)
	Drain Pipe	mm	VP25 (External Dia. 32 / Internal Dia. 25)	VP25 (External Dia. 32 / Internal Dia. 25)	VP25 (External Dia. 32 / Internal Dia. 25)	VP25 (External Dia. 32 / Internal Dia. 25)
Machine Weight (Mass)		kg	26	26	26	31
∗5 Sound Level (H/L) (220V)		dBA	32/27	34/28	34/28	34/29
Safety Devices			Fuse. Thermal Protector for Fan Motor.	Fuse. Thermal Protector for Fan Motor.	Fuse. Thermal Protector for Fan Motor.	Fuse. Thermal Protector for Fan Motor.
Refrigerant Control			Electronic Expansion Valve	Electronic Expansion Valve	Electronic Expansion Valve	Electronic Expansion Valve
Connectable Outdoor Unit			R-410A P Series	R-410A P Series	R-410A P Series	R-410A P Series
Decoration Panels (Option)	Model		BYBC32G-W1	BYBC32G-W1	BYBC32G-W1	BYBC50G-W1
	Panel Color		White (10Y9/0.5)	White (10Y9/0.5)	White (10Y9/0.5)	White (10Y9/0.5)
	Dimensions: (H×W×D)	mm	53×1,030×680	53×1,030×680	53×1,030×680	53×1,245×680
	Air Filter		Resin Net (with Mold Resistant)	Resin Net (with Mold Resistant)	Resin Net (with Mold Resistant)	Resin Net (with Mold Resistant)
	Weight	kg	8	8	8	8.5
Standard Accessories			Operation Manual. Installation Manual. Paper Pattern for Installation. Washer for Hanging Brackets. Clamp Metal. Drain Hose. Insulation for Fitting. Washer Fixing Plates. Sealing Pads. Clamps. Screws. Washers.	Operation Manual. Installation Manual. Paper Pattern for Installation. Washer for Hanging Brackets. Clamp Metal. Drain Hose. Insulation for Fitting. Washer Fixing Plates. Sealing Pads. Clamps. Screws. Washers.	Operation Manual. Installation Manual. Paper Pattern for Installation. Washer for Hanging Brackets. Clamp Metal. Drain Hose. Insulation for Fitting. Washer Fixing Plates. Sealing Pads. Clamps. Screws. Washers.	Operation Manual. Installation Manual. Paper Pattern for Installation. Washer for Hanging Brackets. Clamp Metal. Drain Hose. Insulation for Fitting. Washer Fixing Plates. Sealing Pads. Clamps. Screws. Washers.
Drawing No.			C : 3D039413			

Note:

∗1 Indoor temp. : 27°CDB, 19.5°CWB / outdoor temp. : 35°CDB / Equivalent piping length : 7.5 m, level difference : 0 m.
∗2 Indoor temp. : 27°CDB, 19.0°CWB / outdoor temp. : 35°CDB / Equivalent piping length : 7.5 m, level difference : 0 m.
∗3 Indoor temp. : 20°CDB / outdoor temp. : 7°CDB, 6°CWB / Equivalent piping length : 7.5 m, level difference : 0 m.
4 Capacities are net, including a deduction for cooling (an addition for heating) for indoor fan motor heat.
∗5 Anechoic chamber conversion value, measured at a point 1.5 m downward from the unit center. During actual operation, these values are normally somewhat higher as a result of ambient conditions.
6 Refer to page 31 for Fan Motor Input.

Conversion Formulae
kcal/h=kW×860 Btu/h=kW×3412 cfm=m³/min×35.3

Ceiling Mounted Cassette Type (Double-Flow)

Model			FXCQ50MVE	FXCQ63MVE	FXCQ80MVE	FXCQ125MVE
∗1 Cooling Capacity (19.5°CWB)		kcal/h	5,000	6,300	8,000	12,500
		Btu/h	19,800	24,900	31,700	49,500
		kW	5.8	7.3	9.3	14.5
∗2 Cooling Capacity (19.0°CWB)		kW	5.6	7.1	9.0	14.0
∗3 Heating Capacity		kcal/h	5,400	6,900	8,600	13,800
		Btu/h	21,500	27,300	34,100	54,600
		kW	6.3	8.0	10.0	16.0
Casing			Galvanized Steel Plate	Galvanized Steel Plate	Galvanized Steel Plate	Galvanized Steel Plate
Dimensions: (H×W×D)		mm	305×990×600	305×1,175×600	305×1,665×600	305×1,665×600
Coil (Cross Fin Coil)	Rows×Stages×Fin Pitch	mm	2×10×1.5	2×10×1.5	2×10×1.5	2×10×1.5
	Face Area	m²	2×0.145	2×0.184	2×0.287	2×0.287
Fan	Model		2D17K1AA1	2D17K2AA1VE	3D17K2AA1	3D17K2AB1
	Type		Sirocco Fan	Sirocco Fan	Sirocco Fan	Sirocco Fan
	Motor Output × Number of Units	W	20×1	30×1	50×1	85×1
	Air Flow Rate (H/L)	m³/min	12/9	16.5/13	26/21	33/25
		cfm	424/318	582/459	918/741	1,165/883
	Drive		Direct Drive	Direct Drive	Direct Drive	Direct Drive
Temperature Control			Microprocessor Thermostat for Cooling and Heating	Microprocessor Thermostat for Cooling and Heating	Microprocessor Thermostat for Cooling and Heating	Microprocessor Thermostat for Cooling and Heating
Sound Absorbing Thermal Insulation Material			Glass Wool/Urethane Foam	Glass Wool/Urethane Foam	Glass Wool/Urethane Foam	Glass Wool/Urethane Foam
Piping Connections	Liquid Pipes	mm	ϕ6.4 (Flare Connection)	ϕ9.5 (Flare Connection)	ϕ9.5 (Flare Connection)	ϕ9.5 (Flare Connection)
	Gas Pipes	mm	ϕ12.7 (Flare Connection)	ϕ15.9 (Flare Connection)	ϕ15.9 (Flare Connection)	ϕ15.9 (Flare Connection)
	Drain Pipe	mm	VP25 (External Dia. 32 / Internal Dia. 25)	VP25 (External Dia. 32 / Internal Dia. 25)	VP25 (External Dia. 32 / Internal Dia. 25)	VP25 (External Dia. 32 / Internal Dia. 25)
Machine Weight (Mass)		kg	32	35	47	48
∗5 Sound Level (H/L) (220V)		dBA	34/29	37/32	39/34	44/38
Safety Devices			Fuse. Thermal Protector for Fan Motor.	Fuse. Thermal Protector for Fan Motor.	Fuse. Thermal Protector for Fan Motor.	Fuse. Thermal Protector for Fan Motor.
Refrigerant Control			Electronic Expansion Valve	Electronic Expansion Valve	Electronic Expansion Valve	Electronic Expansion Valve
Connectable Outdoor Unit			R-410A P Series	R-410A P Series	R-410A P Series	R-410A P Series
Decoration Panels (Option)	Model		BYBC50G-W1	BYBC63G-W1	BYBC125G-W1	BYBC125G-W1
	Panel Color		White (10Y9/0.5)	White (10Y9/0.5)	White (10Y9/0.5)	White (10Y9/0.5)
	Dimensions: (H×W×D)	mm	53×1,245×680	53×1,430×680	53×1,920×680	53×1,920×680
	Air Filter		Resin Net (with Mold Resistant)	Resin Net (with Mold Resistant)	Resin Net (with Mold Resistant)	Resin Net (with Mold Resistant)
	Weight	kg	8.5	9.5	12	12
Standard Accessories			Operation Manual. Installation Manual. Paper Pattern for Installation. Washer for Hanging Brackets. Clamp Metal. Drain Hose. Insulation for Fitting. Washer Fixing Plates. Sealing Pads. Clamps. Screws. Washers.	Operation Manual. Installation Manual. Paper Pattern for Installation. Washer for Hanging Brackets. Clamp Metal. Drain Hose. Insulation for Fitting. Washer Fixing Plates. Sealing Pads. Clamps. Screws. Washers.	Operation Manual. Installation Manual. Paper Pattern for Installation. Washer for Hanging Brackets. Clamp Metal. Drain Hose. Insulation for Fitting. Washer Fixing Plates. Sealing Pads. Clamps. Screws. Washers.	Operation Manual. Installation Manual. Paper Pattern for Installation. Washer for Hanging Brackets. Clamp Metal. Drain Hose. Insulation for Fitting. Washer Fixing Plates. Sealing Pads. Clamps. Screws. Washers.
Drawing No.			C : 3D039413			

Note:

∗1 Indoor temp. : 27°CDB, 19.5°CWB / outdoor temp. : 35°CDB / Equivalent piping length : 7.5 m, level difference : 0 m.
∗2 Indoor temp. : 27°CDB, 19.0°CWB / outdoor temp. : 35°CDB / Equivalent piping length : 7.5 m, level difference : 0 m.
∗3 Indoor temp. : 20°CDB / outdoor temp. : 7°CDB, 6°CWB / Equivalent piping length : 7.5 m, level difference : 0 m.
4 Capacities are net, including a deduction for cooling (an addition for heating) for indoor fan motor heat.
∗5 Anechoic chamber conversion value, measured at a point 1.5 m downward from the unit center. During actual operation, these values are normally somewhat higher as a result of ambient conditions.
6 Refer to page 31 for Fan Motor Input.

Conversion Formulae
kcal/h=kW×860 Btu/h=kW×3412 cfm=m³/min×35.3

3. Dimensions

FXCQ20M + BYBC32G-W1 (Decoration Panel)
FXCQ25M + BYBC32G-W1 (Decoration Panel)
FXCQ32M + BYBC32G-W1 (Decoration Panel)

Unit (mm)

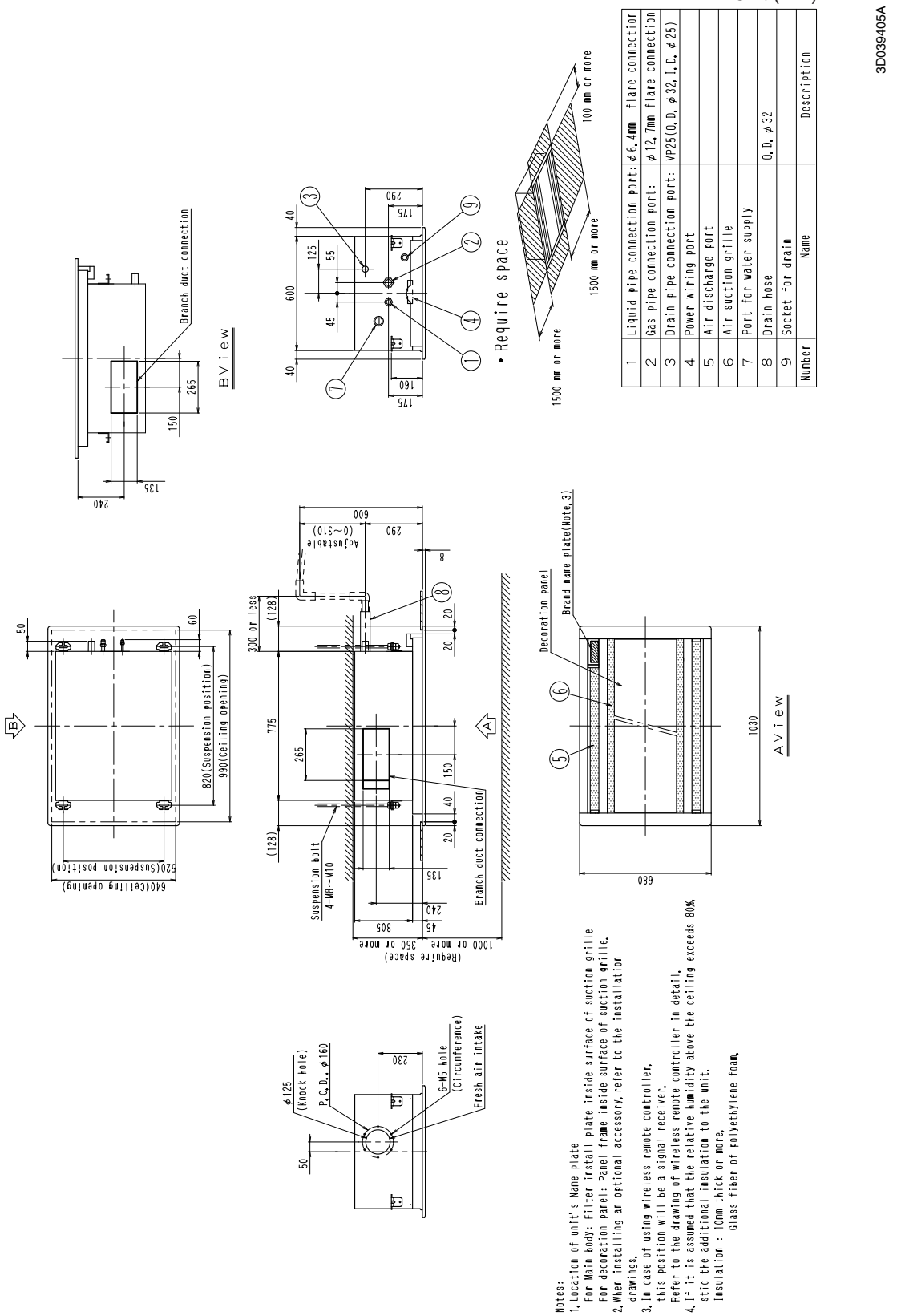

Number	Name	Description
1	Liquid pipe connection port:	φ6.4mm flare connection
2	Gas pipe connection port:	φ12.7mm flare connection
3	Drain pipe connection port:	VP25(O.D. φ32, I.D. φ25)
4	Power wiring port	
5	Air discharge port	
6	Air suction grille	
7	Port for water supply	
8	Drain hose	O.D. φ32
9	Socket for drain	

FXCQ40M + BYBC50G-W1 (Decoration Panel)
FXCQ50M + BYBC50G-W1 (Decoration Panel)

2

Unit (mm)

3D039406A

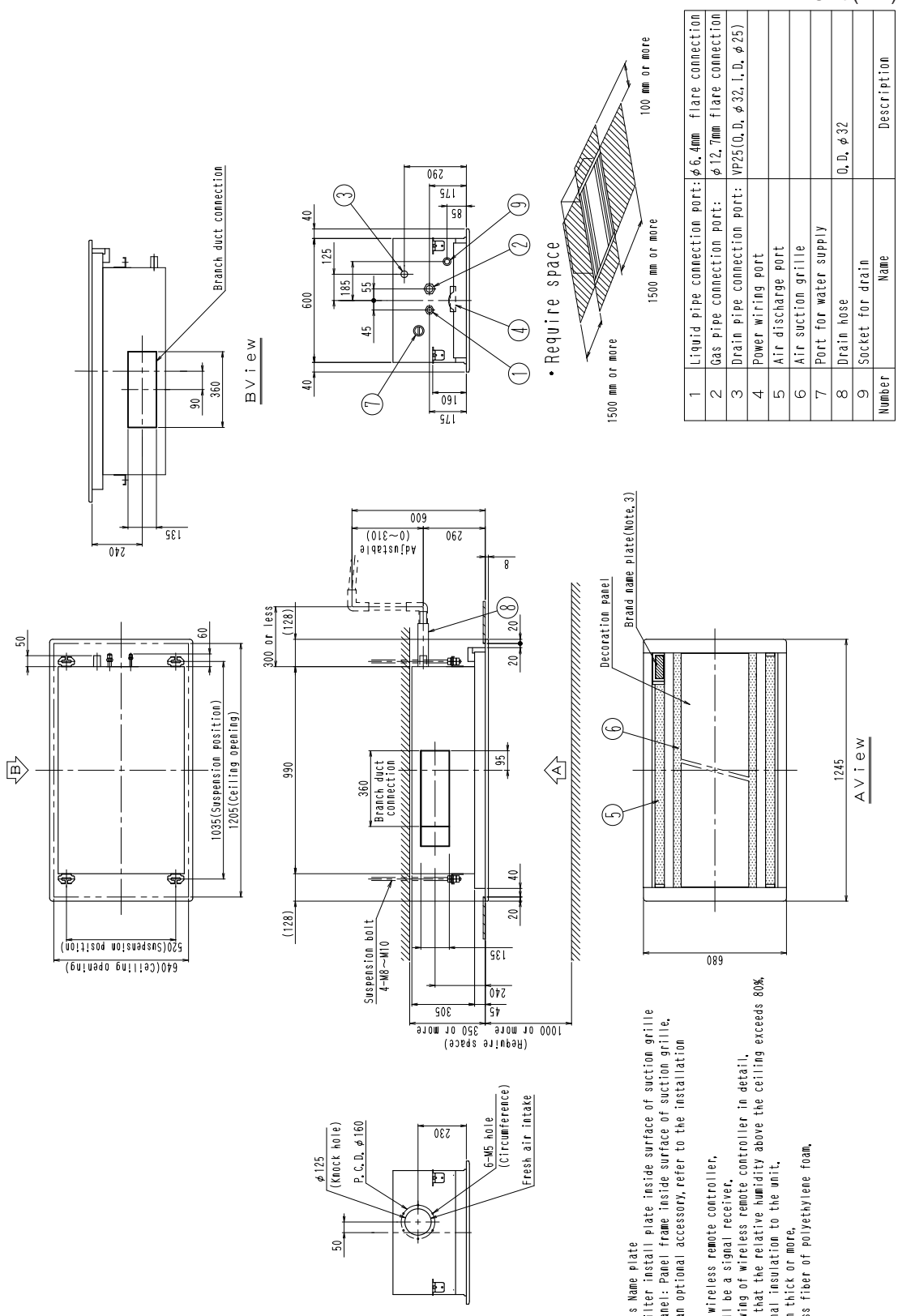

Number	Name	Description
1	Liquid pipe connection port:	φ6.4mm flare connection
2	Gas pipe connection port:	φ12.7mm flare connection
3	Drain pipe connection port:	VP25(O.D. φ32, I.D. φ25)
4	Power wiring port	
5	Air discharge port	
6	Air suction grille	
7	Port for water supply	
8	Drain hose	O.D. φ32
9	Socket for drain	

Notes:
1. Location of unit's Name plate
   For Main body: Filter install plate inside surface of suction grille
   For decoration panel: Panel frame inside surface of suction grille.
2. When installing an optional accessory, refer to the installation drawings.
3. In case of using wireless remote controller, this position will be a signal receiver. Refer to the drawing of wireless remote controller in detail.
4. If it is assumed that the relative humidity above the ceiling exceeds 80%, stic the additional insulation to the unit.
   Insulation : 10mm thick or more,
   Glass fiber of polyethylene foam,

FXCQ63M + BYBC63G-W1 (Decoration Panel)

Unit (mm)

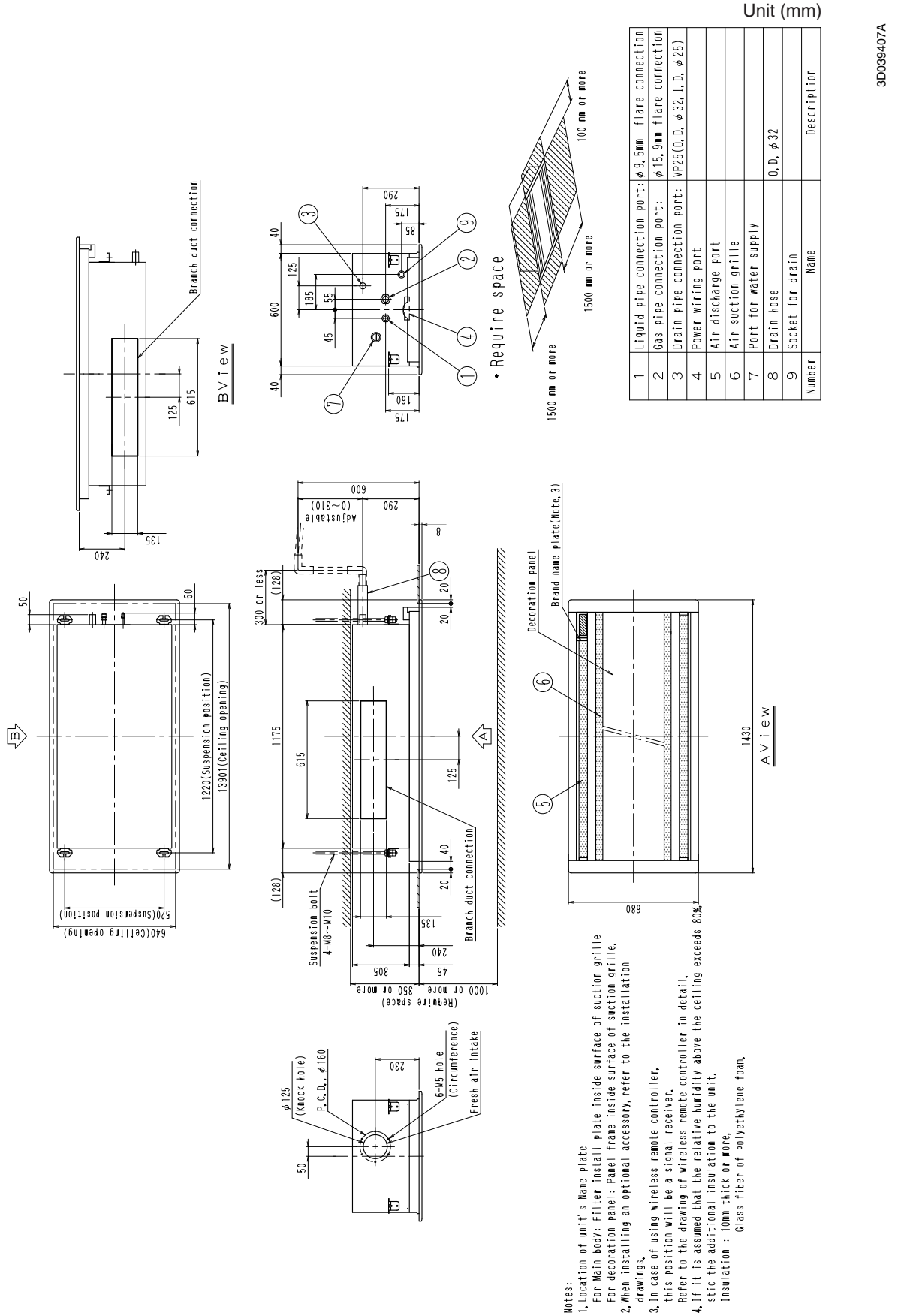

Number	Name	Description
1	Liquid pipe connection port:	ϕ9.5mm flare connection
2	Gas pipe connection port:	ϕ15.9mm flare connection
3	Drain pipe connection port:	VP25(O.D. ϕ32, I.D. ϕ25)
4	Power wiring port	
5	Air discharge port	
6	Air suction grille	
7	Port for water supply	
8	Drain hose	O.D. ϕ32
9	Socket for drain	

Notes:
1. Location of unit's Name Plate
   For Main body: Filter install plate inside surface of suction grille
   For decoration panel: Panel frame inside surface of suction grille.
2. When installing an optional accessory, refer to the installation drawings.
3. In case of using wireless remote controller, this position will be a signal receiver. Refer to the drawing of wireless remote controller in detail.
4. If it is assumed that the relative humidity above the ceiling exceeds 80%, stic the additional insulation to the unit.
   Insulation : 10mm thick or more,
   Glass fiber of polyethylene foam.

FXCQ80M + BYBC125G-W1 (Decoration Panel)
FXCQ125M + BYBC125G-W1 (Decoration Panel)

2

Unit (mm)

3D039409A

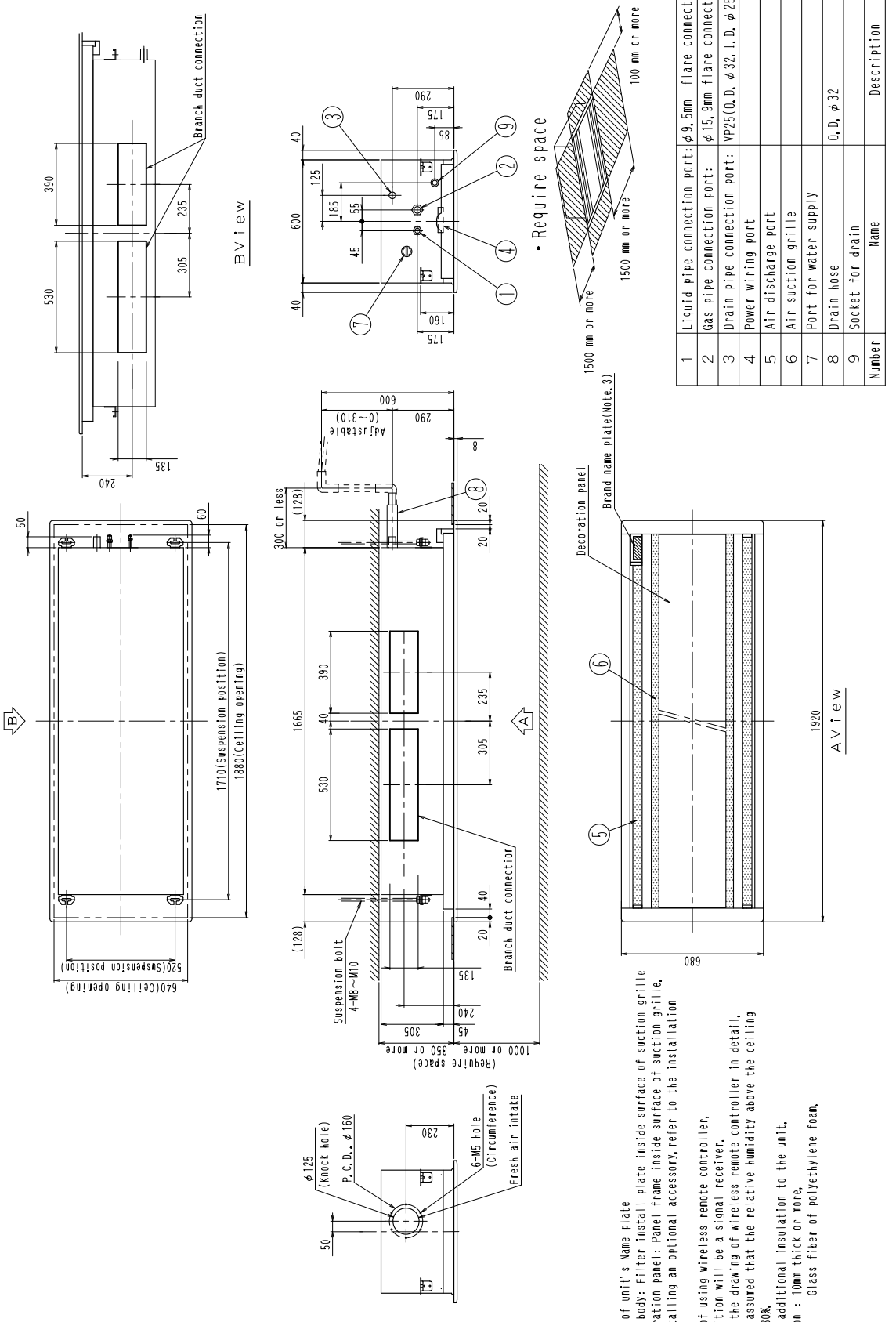

Number	Name	Description
1	Liquid pipe connection port:	φ9.5mm flare connection
2	Gas pipe connection port:	φ15.9mm flare connection
3	Drain pipe connection port:	VP25(O.D. φ32, I.D. φ25)
4	Power wiring port	
5	Air discharge port	
6	Air suction grille	
7	Port for water supply	
8	Drain hose	O.D. φ32
9	Socket for drain	

Notes:
1. Location of unit's Name plate
   For Main body: Filter install plate inside surface of suction grille
   For decoration panel: Panel frame inside surface of suction grille.
2. When installing an optional accessory, refer to the installation drawings.
3. In case of using wireless remote controller, this position will be a signal receiver. Refer to the drawing of wireless remote controller in detail.
4. If it is assumed that the relative humidity above the ceiling exceeds 80%, stic the additional insulation to the unit. Insulation : 10mm thick or more. Glass fiber of polyethylene foam.

4. Piping Diagrams

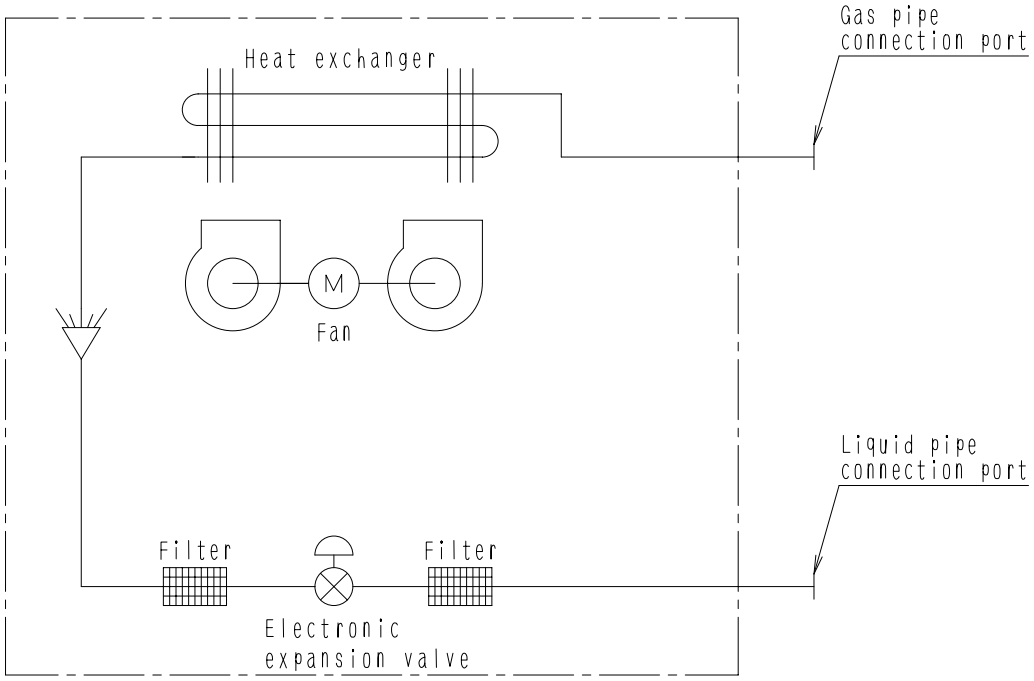

4D034245B

■ **Refrigerant pipe connection port diameters**

(mm)

Model	Gas	Liquid
FXCQ20 · 25 · 32 · 40 · 50M	ϕ12.7	ϕ6.4
FXCQ63 · 80 · 125M	ϕ15.9	ϕ9.5

5. Wiring Diagrams

FXCQ20 · 25 · 32 · 63MVE

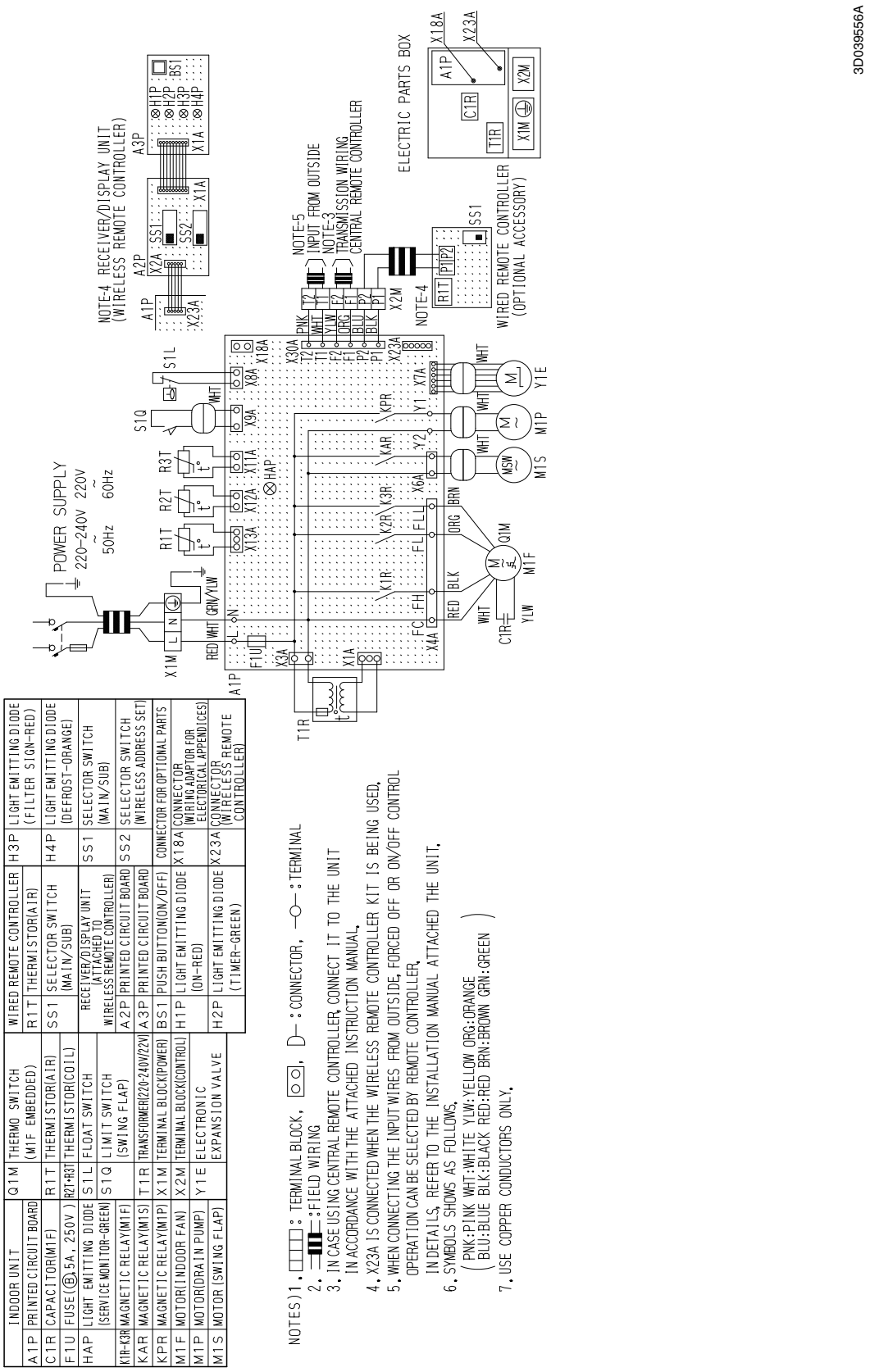

FXCQ40 · 50 · 80 · 125MVE

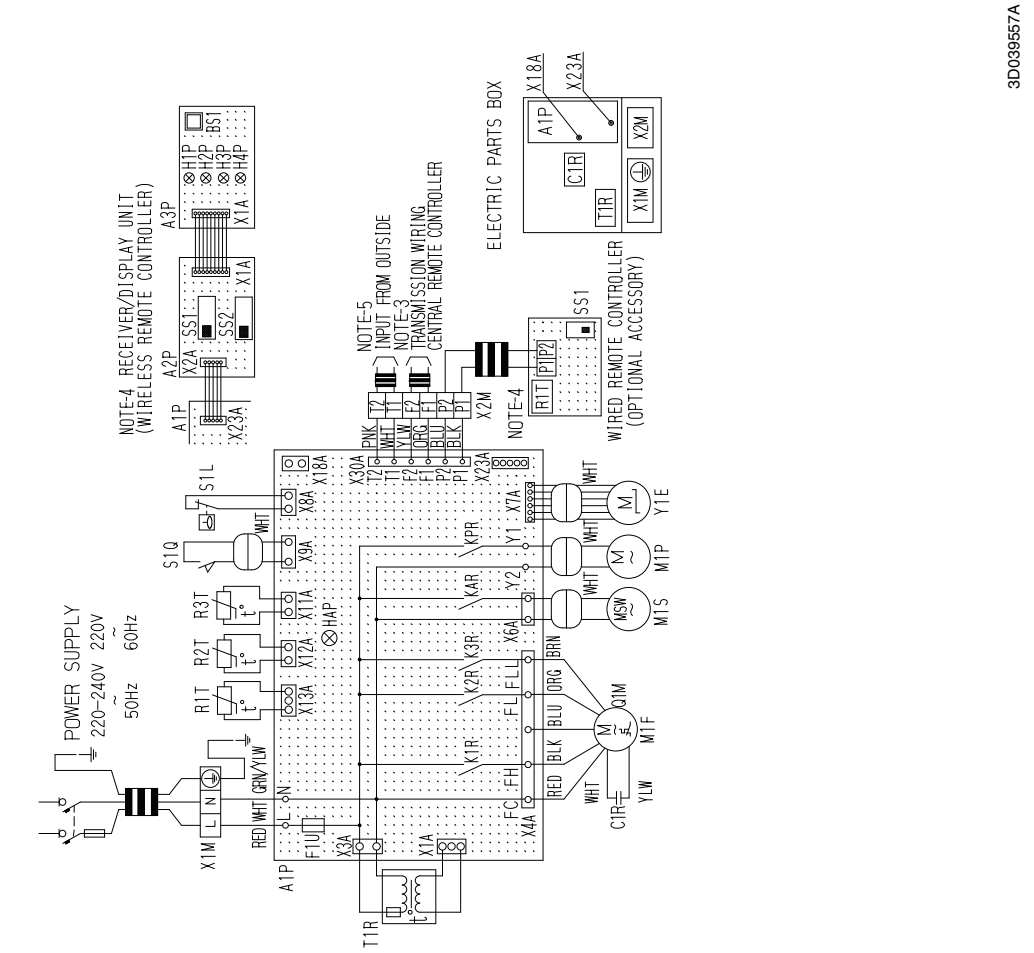

	INDOOR UNIT		S1L	FLOAT SWITCH		H1P	LIGHT EMITTING DIODE (ON-RED)
A1P	PRINTED CIRCUIT BOARD		S1Q	LIMIT SWITCH (SWING FLAP)		H2P	LIGHT EMITTING DIODE (TIMER-GREEN)
C1R	CAPACITOR(M1F)						
F1U	FUSE(Ⓑ5A, 250V)		T1R	TRANSFORMER(220-240V/22V)			
HAP	LIGHT EMITTING DIODE (SERVICE MONITOR-GREEN)		X1M	TERMINAL BLOCK(POWER)		H3P	LIGHT EMITTING DIODE (FILTER SIGN-RED)
			X2M	TERMINAL BLOCK(CONTROL)			
K1R·K3R	MAGNETIC RELAY(M1F)		Y1E	ELECTRONIC EXPANSION VALVE		H4P	LIGHT EMITTING DIODE (DEFROST-ORANGE)
KAR	MAGNETIC RELAY(M1S)						
KPR	MAGNETIC RELAY(M1P)			WIRED REMOTE CONTROLLER		SS1	SELECTOR SWITCH (MAIN/SUB)
M1F	MOTOR(INDOOR FAN)		R1T	THERMISTOR(AIR)		SS2	SELECTOR SWITCH (WIRELESS ADDRESS SET)
M1P	MOTOR(DRAIN PUMP)		SS1	SELECTOR SWITCH (MAIN/SUB)			
M1S	MOTOR (SWING FLAP)						
Q1M	THERMO SWITCH (M1F EMBEDDED)			RECEIVER/DISPLAY UNIT (ATTACHED TO WIRELESS REMOTE CONTROLLER)			CONNECTOR FOR OPTIONAL PARTS
						X18A	CONNECTOR (WIRING ADAPTOR FOR ELECTORICAL APPENDICES)
R1T	THERMISTOR(AIR)		A2P	PRINTED CIRCUIT BOARD		X23A	CONNECTOR (WIRELESS REMOTE CONTROLLER)
R2T·R3T	THERMISTOR(COIL)		A3P	PRINTED CIRCUIT BOARD			
			BS1	PUSH BUTTON(ON/OFF)			

NOTES) 1. □□□□: TERMINAL BLOCK, ⊡⊡, ⊐: CONNECTOR, —○—: TERMINAL
2. ——: FIELD WIRING
3. IN CASE USING CENTRAL REMOTE CONTROLLER, CONNECT IT TO THE UNIT IN ACCORDANCE WITH THE ATTACHED INSTRUCTION MANUAL.
4. X23A IS CONNECTED WHEN THE WIRELESS REMOTE CONTROLLER KIT IS BEING USED.
5. WHEN CONNECTING THE INPUT WIRES FROM OUTSIDE, FORCED OFF OR ON/OFF CONTROL OPERATION CAN BE SELECTED BY REMOTE CONTROLLER. IN DETAILS, REFER TO THE INSTALLATION MANUAL ATTACHED THE UNIT.
6. SYMBOLS SHOWS AS FOLLOWS.
(PNK:PINK WHT:WHITE YLW:YELLOW ORG:ORANGE
BLU:BLUE BLK:BLACK RED:RED BRN:BROWN GRN:GREEN)
7. USE COPPER CONDUCTORS ONLY.

6. Electric Characteristics

Units					Power supply		IFM		Input(W)	
Model	Type	Hz	Volts	Voltage range	MCA	MFA	KW	FLA	Cooling	Heating
FXCQ20M	VE	50	220-240	MAX. 264 Min. 198	0.5	15	0.010	0.4	77	44
FXCQ25 · 32M					0.5	15	0.015	0.4	92	59
FXCQ40 · 50M					0.8	15	0.020	0.6	130	97
FXCQ63M					0.9	15	0.030	0.7	161	126
FXCQ80M					1.1	15	0.050	0.9	209	176
FXCQ125M					1.3	15	0.085	1.0	256	223
FXCQ20M	VE	60	220	MAX. 242 Min. 198	0.5	15	0.010	0.4	81	48
FXCQ25 · 32M					0.5	15	0.015	0.4	95	62
FXCQ40 · 50M					0.8	15	0.020	0.6	132	99
FXCQ63M					0.9	15	0.030	0.7	157	124
FXCQ80M					1.3	15	0.050	1.0	216	183
FXCQ125M					1.5	15	0.085	1.2	278	245

Symbols:

MCA : Min. Circuit Amps (A)
MFA : Max. Fuse Amps (See note 5)
KW : Fan Motor Rated Output(KW)
FLA : Full Load Amps(A)
IFM : Indoor Fan Motor

Note:

1. Voltage range

   Units are suitable for use on electrical systems where voltage supplied to unit terminals is not below or above listed range limits.

2. Maximum allowable voltage unbalance between phases is 2%.

3. MCA/MFA

   MCA = 1.25 X FLA

   MFA ≦ 4 X FLA

   (Next lower standard fuse rating. Min. 15A)

4. Select wire size based on the MCA.

5. Instead of fuse, use Circuit Breaker.

C : 4D034243A

7. Capacity Tables

7.1 Cooling Capacity

FXCQ-M **[50/60Hz]**

Cooling capacity

Unit Size	Outdoor air temp. °CDB	Indoor air temp. 14.0°CWB 20°CDB TC	SHC	16.0°CWB 23°CDB TC	SHC	18.0°CWB 26°CDB TC	SHC	19.0°CWB 27°CDB TC	SHC	20.0°CWB 28°CDB TC	SHC	22.0°CWB 30°CDB TC	SHC	24.0°CWB 32°CDB TC	SHC
20	10.0	1.5	1.4	1.8	1.5	2.1	1.7	2.2	1.7	2.3	1.8	2.6	1.7	2.9	1.7
	12.0	1.5	1.4	1.8	1.5	2.1	1.7	2.2	1.7	2.3	1.8	2.6	1.7	2.9	1.7
	14.0	1.5	1.4	1.8	1.5	2.1	1.7	2.2	1.7	2.3	1.8	2.6	1.7	2.8	1.7
	16.0	1.5	1.4	1.8	1.5	2.1	1.7	2.2	1.7	2.3	1.8	2.6	1.7	2.7	1.7
	18.0	1.5	1.4	1.8	1.5	2.1	1.7	2.2	1.7	2.3	1.8	2.6	1.7	2.7	1.6
	20.0	1.5	1.4	1.8	1.5	2.1	1.7	2.2	1.7	2.3	1.8	2.6	1.7	2.7	1.6
	21.0	1.5	1.4	1.8	1.5	2.1	1.7	2.2	1.7	2.3	1.8	2.6	1.7	2.6	1.6
	23.0	1.5	1.4	1.8	1.5	2.1	1.7	2.2	1.7	2.3	1.8	2.6	1.7	2.6	1.6
	25.0	1.5	1.4	1.8	1.5	2.1	1.7	2.2	1.7	2.3	1.8	2.6	1.7	2.6	1.6
	27.0	1.5	1.4	1.8	1.5	2.1	1.7	2.2	1.7	2.3	1.8	2.5	1.7	2.5	1.6
	29.0	1.5	1.4	1.8	1.5	2.1	1.7	2.2	1.7	2.3	1.8	2.4	1.7	2.5	1.5
	31.0	1.5	1.4	1.8	1.5	2.1	1.7	2.2	1.7	2.3	1.8	2.4	1.6	2.5	1.5
	33.0	1.5	1.4	1.8	1.5	2.1	1.7	2.2	1.7	2.3	1.7	2.4	1.6	2.4	1.5
	35.0	1.5	1.4	1.8	1.5	2.1	1.7	2.2	1.7	2.3	1.7	2.3	1.6	2.4	1.5
	37.0	1.5	1.4	1.8	1.5	2.1	1.7	2.2	1.7	2.2	1.7	2.3	1.6	2.3	1.5
	39.0	1.5	1.4	1.8	1.5	2.1	1.7	2.2	1.7	2.2	1.7	2.3	1.6	2.3	1.5
25	10.0	1.9	1.7	2.3	1.9	2.6	2.1	2.8	2.1	3.0	2.2	3.4	2.2	3.7	2.2
	12.0	1.9	1.7	2.3	1.9	2.6	2.1	2.8	2.1	3.0	2.2	3.4	2.2	3.6	2.2
	14.0	1.9	1.7	2.3	1.9	2.6	2.1	2.8	2.1	3.0	2.2	3.4	2.2	3.6	2.2
	16.0	1.9	1.7	2.3	1.9	2.6	2.1	2.8	2.1	3.0	2.2	3.4	2.2	3.5	2.2
	18.0	1.9	1.7	2.3	1.9	2.6	2.1	2.8	2.1	3.0	2.2	3.4	2.2	3.4	2.1
	20.0	1.9	1.7	2.3	1.9	2.6	2.1	2.8	2.1	3.0	2.2	3.4	2.2	3.4	2.1
	21.0	1.9	1.7	2.3	1.9	2.6	2.1	2.8	2.1	3.0	2.2	3.4	2.2	3.4	2.1
	23.0	1.9	1.7	2.3	1.9	2.6	2.1	2.8	2.1	3.0	2.2	3.3	2.2	3.3	2.1
	25.0	1.9	1.7	2.3	1.9	2.6	2.1	2.8	2.1	3.0	2.2	3.3	2.2	3.3	2.0
	27.0	1.9	1.7	2.3	1.9	2.6	2.1	2.8	2.1	3.0	2.2	3.2	2.1	3.2	2.0
	29.0	1.9	1.7	2.3	1.9	2.6	2.1	2.8	2.1	3.0	2.2	3.2	2.1	3.2	2.0
	31.0	1.9	1.7	2.3	1.9	2.6	2.1	2.8	2.1	3.0	2.2	3.1	2.1	3.1	2.0
	33.0	1.9	1.7	2.3	1.9	2.6	2.1	2.8	2.2	3.0	2.2	3.0	2.1	3.1	1.9
	35.0	1.9	1.7	2.3	1.9	2.6	2.1	2.8	2.2	3.0	2.2	3.0	2.0	3.0	1.9
	37.0	1.9	1.7	2.3	1.9	2.6	2.1	2.8	2.2	2.9	2.2	2.9	2.0	3.0	1.9
	39.0	1.9	1.7	2.3	1.9	2.6	2.1	2.8	2.2	2.9	2.2	2.9	2.0	3.0	1.9
32	10.0	2.4	2.1	2.9	2.3	3.4	2.5	3.6	2.6	3.8	2.6	4.3	2.7	4.7	2.7
	12.0	2.4	2.1	2.9	2.3	3.4	2.5	3.6	2.6	3.8	2.6	4.3	2.7	4.7	2.7
	14.0	2.4	2.1	2.9	2.3	3.4	2.5	3.6	2.6	3.8	2.6	4.3	2.7	4.6	2.6
	16.0	2.4	2.1	2.9	2.3	3.4	2.5	3.6	2.6	3.8	2.6	4.3	2.7	4.6	2.6
	18.0	2.4	2.1	2.9	2.3	3.4	2.5	3.6	2.6	3.8	2.6	4.3	2.7	4.5	2.5
	20.0	2.4	2.1	2.9	2.3	3.4	2.5	3.6	2.6	3.8	2.6	4.3	2.7	4.4	2.5
	21.0	2.4	2.1	2.9	2.3	3.4	2.5	3.6	2.6	3.8	2.6	4.2	2.6	4.3	2.5
	23.0	2.4	2.1	2.9	2.3	3.4	2.5	3.6	2.6	3.8	2.6	4.2	2.6	4.3	2.5
	25.0	2.4	2.1	2.9	2.3	3.4	2.5	3.6	2.6	3.8	2.6	4.2	2.6	4.2	2.4
	27.0	2.4	2.1	2.9	2.3	3.4	2.5	3.6	2.6	3.8	2.6	4.1	2.6	4.2	2.4
	29.0	2.4	2.1	2.9	2.3	3.4	2.5	3.6	2.6	3.8	2.6	4.1	2.5	4.2	2.4
	31.0	2.4	2.1	2.9	2.3	3.4	2.5	3.6	2.6	3.8	2.6	4.0	2.5	4.1	2.4
	33.0	2.4	2.1	2.9	2.3	3.4	2.5	3.6	2.6	3.8	2.6	3.9	2.5	4.0	2.4
	35.0	2.4	2.1	2.9	2.3	3.4	2.5	3.6	2.6	3.8	2.6	3.8	2.4	3.9	2.3
	39.0	2.4	2.1	2.9	2.3	3.4	2.5	3.6	2.6	3.7	2.6	3.8	2.4	3.8	2.3
40	10.0	3.0	2.5	3.6	2.8	4.2	3.1	4.5	3.2	4.8	3.3	5.4	3.3	5.9	3.3
	12.0	3.0	2.5	3.6	2.8	4.2	3.1	4.5	3.2	4.8	3.3	5.4	3.3	5.8	3.3
	14.0	3.0	2.5	3.6	2.8	4.2	3.1	4.5	3.2	4.8	3.3	5.4	3.3	5.8	3.2
	16.0	3.0	2.5	3.6	2.8	4.2	3.1	4.5	3.2	4.8	3.3	5.4	3.3	5.7	3.2
	18.0	3.0	2.5	3.6	2.8	4.2	3.1	4.5	3.2	4.8	3.3	5.4	3.3	5.6	3.1
	20.0	3.0	2.5	3.6	2.8	4.2	3.1	4.5	3.2	4.8	3.3	5.4	3.3	5.5	3.1
	21.0	3.0	2.5	3.6	2.8	4.2	3.1	4.5	3.2	4.8	3.3	5.3	3.3	5.4	3.1
	23.0	3.0	2.5	3.6	2.8	4.2	3.1	4.5	3.2	4.8	3.3	5.2	3.3	5.3	3.1
	25.0	3.0	2.5	3.6	2.8	4.2	3.1	4.5	3.2	4.8	3.3	5.1	3.2	5.2	3.0
	27.0	3.0	2.5	3.6	2.8	4.2	3.1	4.5	3.2	4.8	3.3	5.0	3.1	5.1	2.9
	29.0	3.0	2.5	3.6	2.8	4.2	3.1	4.5	3.2	4.8	3.3	4.9	3.1	5.0	2.9
	31.0	3.0	2.5	3.6	2.8	4.2	3.1	4.5	3.2	4.7	3.3	4.9	3.1	5.0	2.9
	33.0	3.0	2.5	3.6	2.8	4.2	3.1	4.5	3.2	4.7	3.3	4.8	3.0	4.9	2.8
	35.0	3.0	2.5	3.6	2.8	4.2	3.1	4.5	3.2	4.7	3.2	4.8	3.0	4.9	2.8
	37.0	3.0	2.5	3.6	2.8	4.2	3.1	4.5	3.2	4.6	3.2	4.7	3.0	4.8	2.8
	39.0	3.0	2.5	3.6	2.8	4.2	3.1	4.5	3.2	4.6	3.2	4.7	3.0	4.8	2.8

Cooling capacity

Unit Size	Outdoor air temp. °CDB	Indoor air temp. 14.0°CWB 20°CDB TC	SHC	16.0°CWB 23°CDB TC	SHC	18.0°CWB 26°CDB TC	SHC	19.0°CWB 27°CDB TC	SHC	20.0°CWB 28°CDB TC	SHC	22.0°CWB 30°CDB TC	SHC	24.0°CWB 32°CDB TC	SHC
50	10.0	3.8	3.1	4.5	3.4	5.2	3.8	5.6	3.9	6.0	4.0	6.7	4.1	7.4	4.0
	12.0	3.8	3.1	4.5	3.4	5.2	3.8	5.6	3.9	6.0	4.0	6.7	4.1	7.3	4.0
	14.0	3.8	3.1	4.5	3.4	5.2	3.8	5.6	3.9	6.0	4.0	6.7	4.1	7.2	4.0
	16.0	3.8	3.1	4.5	3.4	5.2	3.8	5.6	3.9	6.0	4.0	6.7	4.1	7.1	3.9
	18.0	3.8	3.1	4.5	3.4	5.2	3.8	5.6	3.9	6.0	4.0	6.7	4.1	7.0	3.9
	20.0	3.8	3.1	4.5	3.4	5.2	3.8	5.6	3.9	6.0	4.0	6.7	4.1	6.9	3.8
	21.0	3.8	3.1	4.5	3.4	5.2	3.8	5.6	3.9	6.0	4.0	6.7	4.1	6.8	3.8
	23.0	3.8	3.1	4.5	3.4	5.2	3.8	5.6	3.9	6.0	4.0	6.6	4.0	6.7	3.8
	25.0	3.8	3.1	4.5	3.4	5.2	3.8	5.6	3.9	6.0	4.0	6.5	4.0	6.6	3.7
	27.0	3.8	3.1	4.5	3.4	5.2	3.8	5.6	3.9	6.0	4.0	6.4	3.9	6.5	3.6
	29.0	3.8	3.1	4.5	3.4	5.2	3.8	5.6	3.9	6.0	4.0	6.3	3.9	6.4	3.6
	31.0	3.8	3.1	4.5	3.4	5.2	3.8	5.6	3.9	6.0	4.0	6.2	3.8	6.3	3.6
	33.0	3.8	3.1	4.5	3.4	5.2	3.8	5.6	3.9	6.0	4.0	6.1	3.8	6.2	3.5
	35.0	3.8	3.1	4.5	3.4	5.2	3.8	5.6	3.9	5.9	3.9	6.0	3.7	6.1	3.5
	37.0	3.8	3.1	4.5	3.4	5.1	3.8	5.6	3.9	5.9	3.9	5.9	3.7	6.0	3.4
	39.0	3.8	3.1	4.5	3.4	5.2	3.8	5.6	3.9	5.8	3.9	5.8	3.7	6.0	3.4
63	10.0	4.8	3.8	5.7	4.2	6.6	4.7	7.1	4.9	7.6	4.9	8.5	5.0	9.3	5.0
	12.0	4.8	3.8	5.7	4.2	6.6	4.7	7.1	4.9	7.6	4.9	8.5	5.0	9.2	5.0
	14.0	4.8	3.8	5.7	4.2	6.6	4.7	7.1	4.9	7.6	4.9	8.5	5.0	9.1	4.9
	16.0	4.8	3.8	5.7	4.2	6.6	4.7	7.1	4.9	7.6	4.9	8.5	5.0	9.0	4.9
	18.0	4.8	3.8	5.7	4.2	6.6	4.7	7.1	4.9	7.6	4.9	8.5	5.0	8.8	4.8
	20.0	4.8	3.8	5.7	4.2	6.6	4.7	7.1	4.9	7.6	4.9	8.5	5.0	8.7	4.7
	21.0	4.8	3.8	5.7	4.2	6.6	4.7	7.1	4.9	7.6	4.9	8.5	5.0	8.7	4.7
	23.0	4.8	3.8	5.7	4.2	6.6	4.7	7.1	4.9	7.6	4.9	8.4	4.9	8.5	4.6
	25.0	4.8	3.8	5.7	4.2	6.6	4.7	7.1	4.9	7.6	4.9	8.3	4.9	8.4	4.6
	27.0	4.8	3.8	5.7	4.2	6.6	4.7	7.1	4.9	7.6	4.9	8.1	4.8	8.3	4.5
	29.0	4.8	3.8	5.7	4.2	6.6	4.7	7.1	4.9	7.6	4.9	8.0	4.7	8.2	4.5
	31.0	4.8	3.8	5.7	4.2	6.6	4.7	7.1	4.9	7.6	4.9	7.9	4.7	8.1	4.4
	33.0	4.8	3.8	5.7	4.2	6.6	4.7	7.1	4.9	7.6	4.9	7.8	4.6	7.9	4.4
	35.0	4.8	3.8	5.7	4.2	6.6	4.7	7.1	4.9	7.5	4.8	7.7	4.6	7.8	4.4
	37.0	4.8	3.8	5.7	4.2	6.6	4.7	7.1	4.9	7.4	4.8	7.5	4.5	7.7	4.3
	39.0	4.8	3.8	5.7	4.2	6.6	4.7	7.1	4.9	7.2	4.7	7.4	4.5	7.6	4.3
80	10.0	6.1	5.2	7.2	5.7	8.4	6.2	9.0	6.3	9.6	6.5	10.8	6.8	11.8	6.7
	12.0	6.1	5.2	7.2	5.7	8.4	6.2	9.0	6.3	9.6	6.5	10.8	6.8	11.7	6.6
	14.0	6.1	5.2	7.2	5.7	8.4	6.2	9.0	6.3	9.6	6.5	10.8	6.8	11.5	6.6
	16.0	6.1	5.2	7.2	5.7	8.4	6.2	9.0	6.3	9.6	6.5	10.8	6.8	11.4	6.5
	18.0	6.1	5.2	7.2	5.7	8.4	6.2	9.0	6.3	9.6	6.5	10.8	6.8	11.2	6.4
	20.0	6.1	5.2	7.2	5.7	8.4	6.2	9.0	6.3	9.6	6.5	10.8	6.8	11.1	6.3
	21.0	6.1	5.2	7.2	5.7	8.4	6.2	9.0	6.3	9.6	6.5	10.8	6.8	11.0	6.3
	23.0	6.1	5.2	7.2	5.7	8.4	6.2	9.0	6.3	9.6	6.5	10.6	6.7	10.8	6.3
	25.0	6.1	5.2	7.2	5.7	8.4	6.2	9.0	6.3	9.6	6.5	10.5	6.6	10.7	6.2
	27.0	6.1	5.2	7.2	5.7	8.4	6.2	9.0	6.3	9.6	6.5	10.3	6.6	10.5	6.1
	29.0	6.1	5.2	7.2	5.7	8.4	6.2	9.0	6.3	9.6	6.5	10.2	6.5	10.4	6.0
	31.0	6.1	5.2	7.2	5.7	8.4	6.2	9.0	6.3	9.6	6.5	10.0	6.4	10.2	6.0
	33.0	6.1	5.2	7.2	5.7	8.4	6.2	9.0	6.3	9.6	6.5	9.8	6.3	10.1	5.9
	35.0	6.1	5.2	7.2	5.7	8.4	6.2	9.0	6.3	9.5	6.4	9.7	6.3	9.9	5.8
	37.0	6.1	5.2	7.2	5.7	8.4	6.2	9.0	6.3	9.3	6.4	9.5	6.2	9.8	5.7
	39.0	6.1	5.2	7.2	5.7	8.4	6.2	9.0	6.3	9.2	6.3	9.4	6.1	9.6	5.7
125	10.0	9.5	7.6	11.3	8.6	13.1	9.5	14.0	9.7	14.9	9.9	16.8	10.2	18.4	10.3
	12.0	9.5	7.6	11.3	8.6	13.1	9.5	14.0	9.7	14.9	9.9	16.8	10.2	18.2	10.2
	14.0	9.5	7.6	11.3	8.6	13.1	9.5	14.0	9.7	14.9	9.9	16.8	10.2	18.0	10.1
	16.0	9.5	7.6	11.3	8.6	13.1	9.5	14.0	9.7	14.9	9.9	16.8	10.2	17.7	9.9
	18.0	9.5	7.6	11.3	8.6	13.1	9.5	14.0	9.7	14.9	9.9	16.8	10.2	17.5	9.8
	20.0	9.5	7.6	11.3	8.6	13.1	9.5	14.0	9.7	14.9	9.9	16.8	10.2	17.2	9.7
	21.0	9.5	7.6	11.3	8.6	13.1	9.5	14.0	9.7	14.9	9.9	16.8	10.2	17.1	9.6
	23.0	9.5	7.6	11.3	8.6	13.1	9.5	14.0	9.7	14.9	9.9	16.5	10.1	16.9	9.5
	25.0	9.5	7.6	11.3	8.6	13.1	9.5	14.0	9.7	14.9	9.9	16.3	10.0	16.6	9.4
	27.0	9.5	7.6	11.3	8.6	13.1	9.5	14.0	9.7	14.9	9.9	16.1	9.8	16.4	9.3
	29.0	9.5	7.6	11.3	8.6	13.1	9.5	14.0	9.7	14.9	9.9	15.8	9.7	16.2	9.3
	31.0	9.5	7.6	11.3	8.6	13.1	9.5	14.0	9.7	14.9	9.9	15.6	9.6	15.9	9.2
	33.0	9.5	7.6	11.3	8.6	13.1	9.5	14.0	9.7	14.9	9.9	15.3	9.5	15.7	9.1
	35.0	9.5	7.6	11.3	8.6	13.1	9.5	14.0	9.7	14.8	9.9	15.1	9.4	15.4	9.0
	37.0	9.5	7.6	11.3	8.6	13.1	9.5	14.0	9.7	14.5	9.7	14.9	9.3	15.2	8.9
	39.0	9.5	7.6	11.3	8.6	13.1	9.5	14.0	9.8	14.3	9.6	14.6	9.2	15.0	8.8

TC Total capacity ; kW
SHC Sensible heat capacity ; kW

Refer to Outdoor Unit Capacity Tables : on page 339~, for the actual performance data of each indoor and outdoor unit combination.

7.2 Heating Capacity

FXCQ-M [50/60Hz]

Heating capacity

Unit Size	Outdoor air temp. °CDB	Outdoor air temp. °CWB	Indoor air temp. °CDB 16.0 kW	18.0 kW	20.0 kW	21.0 kW	22.0 kW	24.0 kW
20	-19.8	-20.0	1.5	1.5	1.5	1.5	1.5	1.5
	-18.8	-19.0	1.5	1.5	1.5	1.5	1.5	1.5
	-16.7	-17.0	1.6	1.6	1.6	1.6	1.6	1.6
	-14.7	-15.0	1.7	1.7	1.8	1.7	1.7	1.7
	-12.6	-13.0	1.8	1.8	1.8	1.8	1.8	1.8
	-10.5	-11.0	1.9	1.9	1.9	1.9	1.9	1.9
	-9.5	-10.0	1.9	1.9	1.9	1.9	1.9	1.9
	-8.5	-9.1	2.0	2.0	1.9	2.0	1.9	2.0
	-7.0	-7.6	2.0	2.0	2.0	2.0	2.0	2.0
	-5.0	-5.6	2.1	2.1	2.1	2.1	2.1	2.1
	-3.0	-3.7	2.2	2.2	2.2	2.2	2.2	2.2
	0.0	-0.7	2.3	2.3	2.3	2.3	2.3	2.2
	3.0	2.2	2.5	2.5	2.4	2.4	2.3	2.2
	5.0	4.1	2.5	2.6	2.5	2.5	2.3	2.2
	7.0	6.0	2.6	2.7	2.5	2.5	2.3	2.2
	9.0	7.9	2.7	2.7	2.5	2.5	2.3	2.2
	11.0	9.8	2.8	2.7	2.5	2.5	2.3	2.2
	13.0	11.8	2.8	2.7	2.5	2.5	2.3	2.2
	15.0	13.7	2.8	2.7	2.5	2.4	2.3	2.2
25	-19.8	-20.0	1.9	1.9	1.9	1.9	1.9	1.9
	-18.8	-19.0	1.9	1.9	1.9	1.9	1.9	1.9
	-16.7	-17.0	2.1	2.1	2.0	2.0	2.0	2.0
	-14.7	-15.0	2.2	2.2	2.2	2.2	2.2	2.1
	-12.6	-13.0	2.3	2.3	2.3	2.3	2.3	2.3
	-10.5	-11.0	2.4	2.4	2.4	2.4	2.4	2.4
	-9.5	-10.0	2.5	2.5	2.5	2.5	2.5	2.5
	-8.5	-9.1	2.6	2.6	2.6	2.6	2.6	2.6
	-7.0	-7.6	2.7	2.7	2.7	2.7	2.7	2.7
	-5.0	-5.6	2.8	2.8	2.8	2.8	2.8	2.8
	-3.0	-3.7	3.0	3.0	3.0	3.0	3.0	2.8
	0.0	-0.7	3.1	3.1	3.1	3.1	3.0	2.8
	2.2	2.2	3.2	3.2	3.2	3.1	3.0	2.8
	5.0	4.1	3.3	3.2	3.2	3.1	3.0	2.8
	7.0	6.0	3.4	3.4	3.2	3.1	3.0	2.8
	9.0	7.9	3.5	3.4	3.2	3.1	3.0	2.8
	11.0	9.8	3.6	3.4	3.2	3.1	3.0	2.8
	13.0	11.8	3.6	3.4	3.2	3.1	3.0	2.8
	15.0	13.7	3.6	3.4	3.2	3.1	3.0	2.8
32	-19.8	-20.0	2.4	2.4	2.3	2.3	2.3	2.3
	-18.8	-19.0	2.4	2.4	2.4	2.4	2.4	2.4
	-16.7	-17.0	2.6	2.6	2.6	2.6	2.6	2.5
	-14.7	-15.0	2.7	2.7	2.7	2.7	2.7	2.7
	-12.6	-13.0	2.9	2.8	2.8	2.8	2.8	2.8
	-10.5	-11.0	3.0	3.0	3.0	3.0	3.0	3.0
	-9.5	-10.0	3.1	3.1	3.1	3.1	3.0	3.0
	-8.5	-9.1	3.1	3.1	3.1	3.1	3.1	3.1
	-7.0	-7.6	3.2	3.2	3.2	3.2	3.1	3.2
	-5.0	-5.6	3.4	3.4	3.4	3.4	3.4	3.4
	-3.0	-3.7	3.5	3.5	3.5	3.5	3.5	3.5
	0.0	-0.7	3.7	3.7	3.7	3.7	3.7	3.5
	2.2	2.2	3.9	3.9	3.8	3.9	3.7	3.5
	4.1	4.1	4.1	4.1	4.0	3.9	3.7	3.5
	6.0	4.2	4.2	4.2	4.0	3.9	3.7	3.5
	7.9	4.3	4.3	4.3	4.0	3.9	3.7	3.5
	9.8	4.5	4.5	4.3	4.0	3.9	3.7	3.5
	11.8	4.5	4.5	4.3	4.0	3.9	3.7	3.5
	13.7	4.5	4.5	4.3	4.0	3.9	3.7	3.5
40	-19.8	-20.0	3.0	2.9	2.9	2.9	2.9	2.9
	-18.8	-19.0	3.0	3.0	3.0	3.0	3.0	3.0
	-16.7	-17.0	3.2	3.2	3.2	3.2	3.2	3.2
	-14.7	-15.0	3.4	3.4	3.4	3.4	3.4	3.4
	-12.6	-13.0	3.6	3.6	3.6	3.5	3.5	3.5
	-10.5	-11.0	3.7	3.8	3.7	3.8	3.7	3.7
	-9.5	-10.0	3.8	3.8	3.8	3.8	3.8	3.8
	-8.5	-9.1	3.9	3.9	3.9	3.9	3.9	3.9
	-7.0	-7.6	4.0	4.0	4.0	4.0	4.0	4.0
	-5.0	-5.6	4.2	4.2	4.2	4.2	4.2	4.2
	-3.0	-3.7	4.4	4.4	4.4	4.4	4.4	4.4
	-0.7	0.0	4.7	4.6	4.6	4.6	4.6	4.4
	2.2	3.0	4.9	4.9	4.9	4.8	4.7	4.4
	4.1	5.0	5.1	5.2	5.0	4.8	4.7	4.4
	6.0	7.0	5.2	5.3	5.0	4.8	4.7	4.4
	7.9	9.0	5.4	5.3	5.0	4.8	4.7	4.4
	9.8	11.0	5.6	5.3	5.0	4.8	4.7	4.4
	11.8	13.0	5.6	5.3	5.0	4.8	4.7	4.4
	13.7	15.0	5.6	5.3	5.0	4.8	4.7	4.4

Heating capacity

Unit Size	Outdoor air temp. °CDB	Outdoor air temp. °CWB	Indoor air temp. °CDB 16.0 kW	18.0 kW	20.0 kW	21.0 kW	22.0 kW	24.0 kW
50	-19.8	-20.0	4.7	4.7	4.7	3.7	3.7	3.7
	-18.8	-19.0	4.9	4.9	4.8	3.8	3.8	3.8
	-16.7	-17.0	5.1	5.1	5.1	4.0	4.0	4.0
	-14.7	-15.0	5.4	5.4	5.4	4.3	4.2	4.2
	-12.6	-13.0	5.7	5.7	5.7	4.5	4.5	4.5
	-10.5	-11.0	6.0	6.0	6.0	4.7	4.7	4.7
	-9.5	-10.0	6.2	6.2	6.2	4.8	4.8	4.8
	-8.5	-9.1	6.4	6.4	6.3	4.9	4.9	4.9
	-7.0	-7.6	6.6	6.7	6.3	5.1	5.1	5.1
	-5.0	-5.6	6.8	6.7	6.3	5.3	5.3	5.3
	-3.0	-3.7	7.0	6.9	6.3	5.5	5.5	5.5
	0.0	-0.7	7.1	6.9	6.3	5.8	5.8	5.5
	3.0	2.2	7.1	6.9	6.3	6.1	5.9	5.5
	5.0	4.1	7.1	6.9	6.3	6.1	5.9	5.5
	7.0	6.0	7.1	6.9	6.3	6.1	5.9	5.5
	9.0	7.9	7.1	6.9	6.3	6.1	5.9	5.5
	11.0	9.8	7.1	6.9	6.3	6.1	5.9	5.5
	13.0	11.8	7.1	6.9	6.3	6.1	5.9	5.5
	15.0	13.7	7.1	6.9	6.3	6.1	5.9	5.5
63	-19.8	-20.0	4.7	4.7	4.7	4.7	4.7	4.7
	-18.8	-19.0	4.9	4.9	4.8	4.8	4.8	4.8
	-16.7	-17.0	5.1	5.1	5.1	5.1	5.1	5.1
	-14.7	-15.0	5.4	5.4	5.4	5.4	5.4	5.4
	-12.6	-13.0	5.7	5.7	5.7	5.7	5.7	5.7
	-10.5	-11.0	6.0	6.0	6.0	6.0	6.0	5.9
	-9.5	-10.0	6.1	6.1	6.1	6.1	6.1	6.1
	-8.5	-9.1	6.3	6.5	6.2	6.2	6.2	6.2
	-7.0	-7.6	6.5	6.5	6.4	6.4	6.4	6.4
	-5.0	-5.6	6.8	6.7	6.7	6.7	6.7	6.7
	-3.0	-3.7	7.0	7.0	7.0	7.0	7.0	7.0
	0.0	-0.7	7.5	7.4	7.4	7.4	7.4	7.0
	2.2	4.1	7.9	7.8	7.8	7.7	7.7	7.0
	4.1	6.0	8.4	8.5	8.0	8.0	7.7	7.0
	6.0	7.9	8.7	8.5	8.0	8.0	7.7	7.0
	7.9	9.8	8.9	8.5	8.0	8.0	7.7	7.0
	9.8	11.8	9.0	8.5	8.0	8.0	7.7	7.0
	11.8	13.7	9.0	8.5	8.0	8.0	7.7	7.0
80	-19.8	-20.0	5.9	5.9	5.9	5.9	5.9	5.8
	-18.8	-19.0	6.1	6.1	6.0	6.0	6.0	6.0
	-16.7	-17.0	6.4	6.4	6.4	6.4	6.4	6.4
	-14.7	-15.0	6.8	6.8	6.8	6.7	6.7	6.7
	-12.6	-13.0	7.1	7.1	7.1	7.1	7.1	7.1
	-10.5	-11.0	7.5	7.5	7.5	7.5	7.4	7.4
	-9.5	-10.0	7.7	7.7	7.6	7.6	7.6	7.6
	-8.5	-9.1	7.8	8.1	7.8	7.8	7.8	7.8
	-7.0	-7.6	8.1	8.1	8.1	8.1	8.0	8.0
	-5.0	-5.6	8.4	8.4	8.4	8.4	8.4	8.4
	-3.0	-3.7	8.8	8.8	8.7	8.7	8.7	8.7
	0.0	-0.7	9.3	9.3	9.3	9.3	9.3	8.7
	3.0	2.2	9.8	9.8	9.8	9.7	9.4	8.7
	5.0	4.1	10.2	10.1	10.0	9.7	9.4	8.7
	7.0	6.0	10.5	10.5	10.0	9.7	9.4	8.7
	9.0	7.9	10.8	10.6	10.0	9.7	9.4	8.7
	11.0	9.8	11.2	10.6	10.0	9.7	9.4	8.7
	13.0	11.8	11.3	10.6	10.0	9.7	9.4	8.7
	15.0	13.7	11.3	10.6	10.0	9.7	9.4	8.7
125	-19.8	-20.0	9.4	9.4	9.4	9.4	9.4	9.3
	-18.8	-19.0	9.7	9.7	9.7	9.7	9.6	9.6
	-16.7	-17.0	10.3	10.2	10.2	10.2	10.2	10.2
	-14.7	-15.0	10.9	10.8	10.8	10.8	10.8	10.7
	-12.6	-13.0	11.4	11.4	11.4	11.4	11.3	11.3
	-10.5	-11.0	12.0	11.9	11.9	11.9	11.9	11.9
	-9.5	-10.0	12.3	12.0	12.2	12.2	12.2	12.2
	-8.5	-9.1	12.5	12.5	12.5	12.5	12.4	12.4
	-7.0	-7.6	13.0	12.9	12.9	12.9	12.9	12.8
	-5.0	-5.6	13.5	13.5	13.5	13.4	13.4	13.4
	-3.0	-3.7	14.1	14.0	14.0	14.0	14.0	13.9
	-0.7	0.0	14.9	14.9	14.8	14.8	14.8	13.9
	2.2	3.0	15.7	15.7	15.7	15.5	15.0	13.9
	4.1	5.0	16.3	16.2	16.0	15.5	15.0	13.9
	6.0	7.0	16.8	16.8	16.0	15.5	15.0	13.9
	7.9	9.0	17.3	17.0	16.0	15.5	15.0	13.9
	9.8	11.0	17.9	17.0	16.0	15.5	15.0	13.9
	11.8	13.0	18.1	17.0	16.0	15.5	15.0	13.9
	13.7	15.0	18.1	17.0	16.0	15.5	15.0	13.9

Refer to Outdoor Unit Capacity Tables : on page 342~, for the actual performance data of each indoor and outdoor unit combination.

8. Air Velocity and Temperature Distributions (Reference Data)

FXCQ63M

(Heating · Air Velocity Distribution)
Discharge Angle : 60°

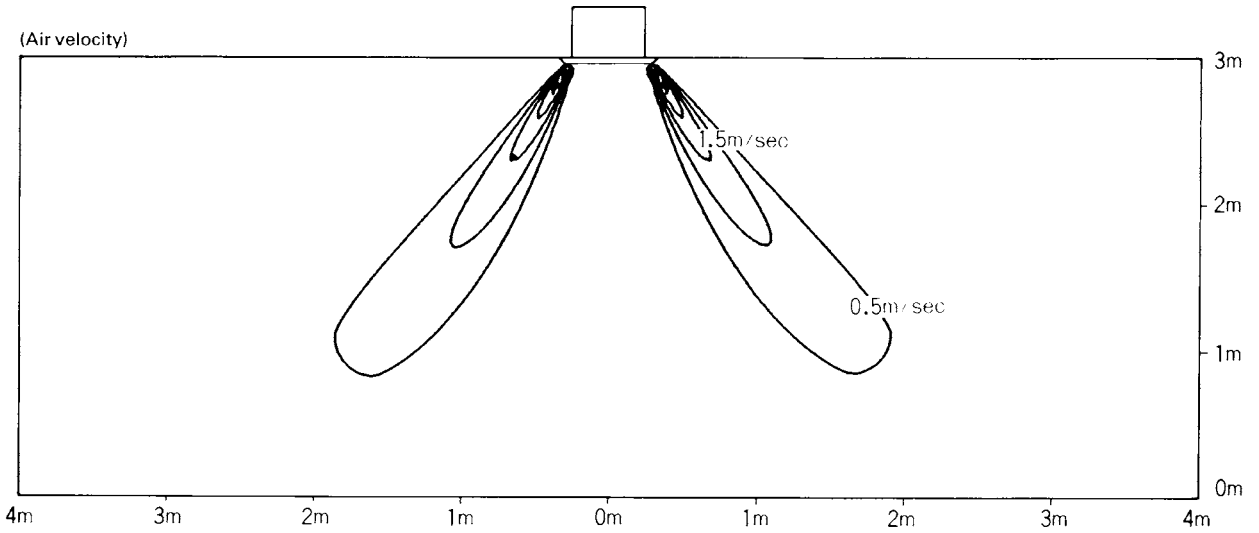

(V0452)

FXCQ63M

(Heating · Temperature Distribution)
Discharge Angle : 60°

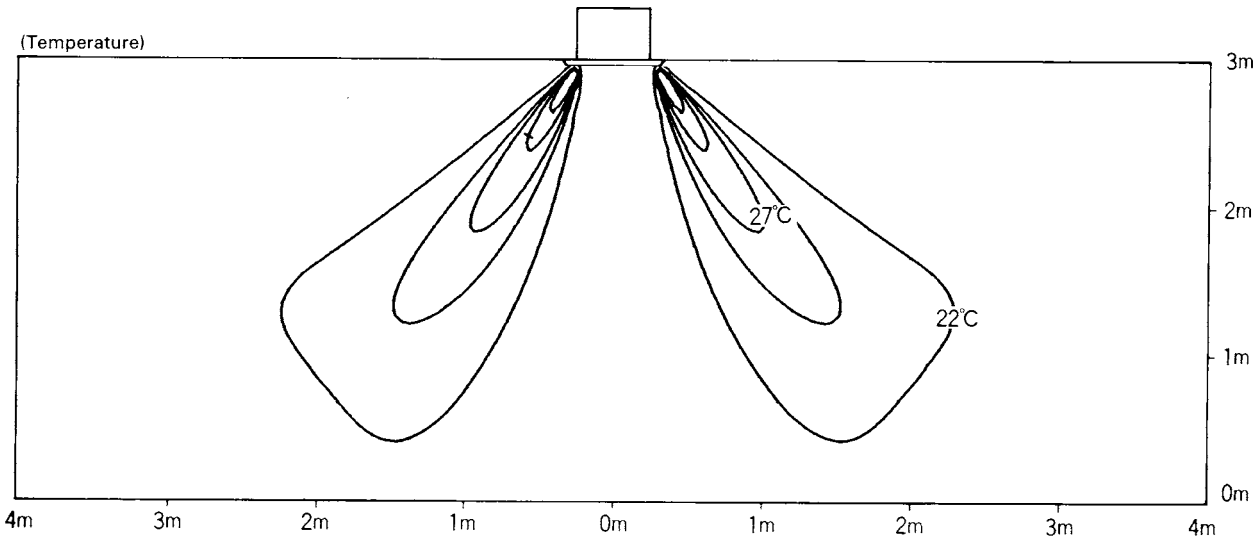

(V0453)

Note:
The standard setup height of the double-flow type is 3 m maximum. Shown here is the measurement distribution at the ceiling height of 3 m.

2

FXCQ125M

(Heating · Air Velocity Distribution)
Discharge Angle : 60°

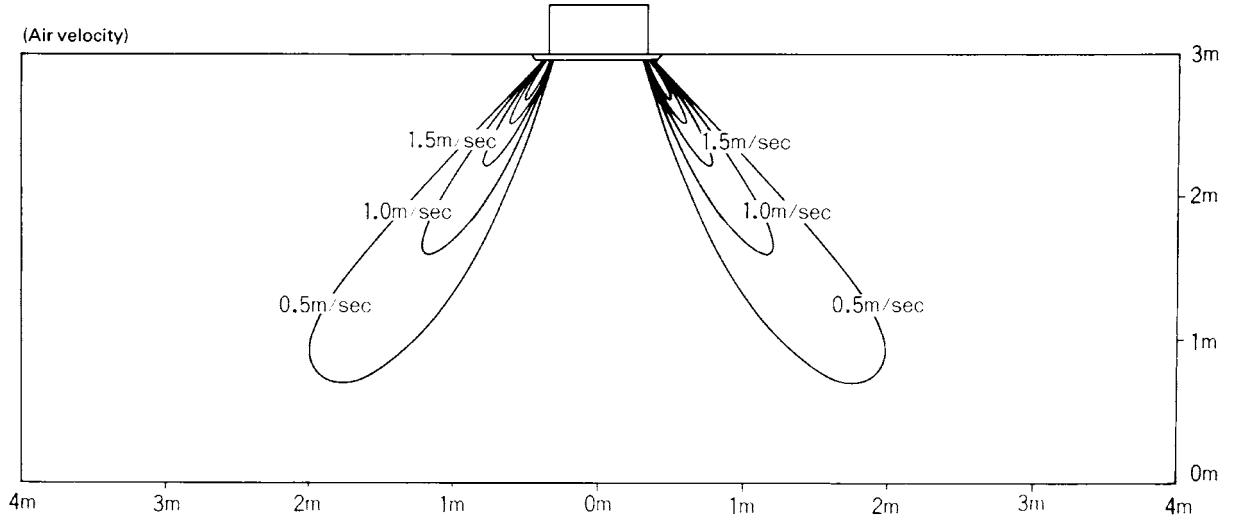

FXCQ125M

(Heating · Temperature Distribution)
Discharge Angle : 60°

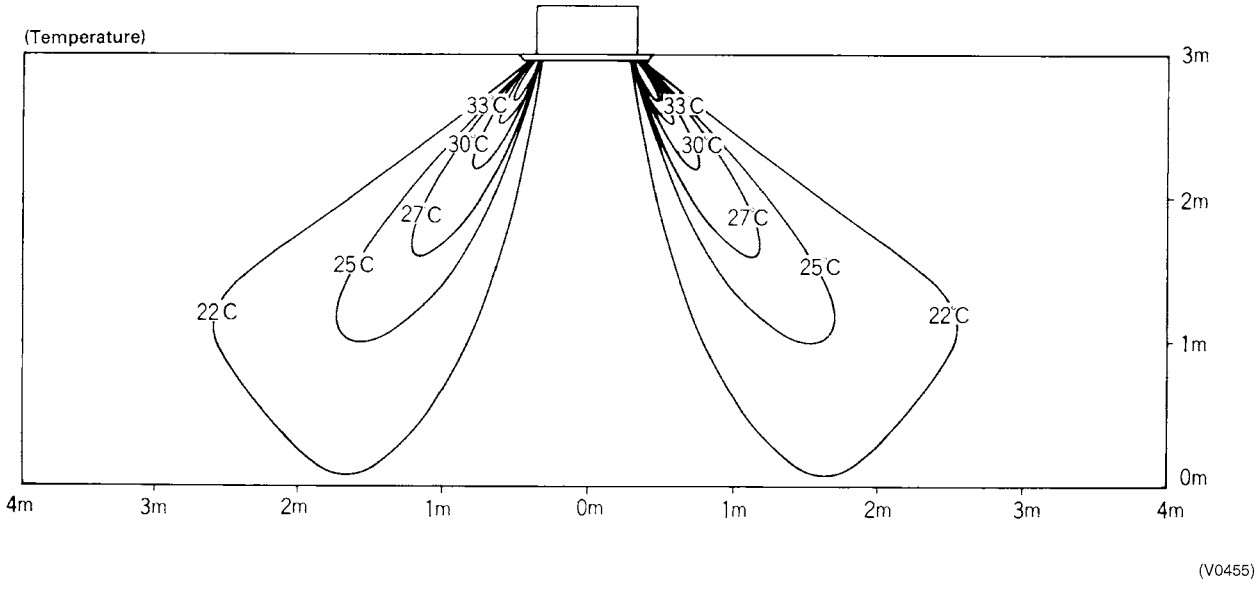

Note:
The standard setup height of the double-flow type is 3 m maximum. Shown here is the measurement distribution at the ceiling height of 3 m.

9. Sound Levels

Overall

■ **Ceiling Mounted Cassette Type (Double-Flow)**

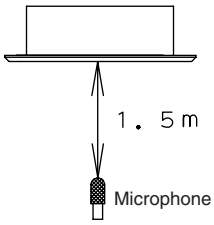

4D034329

Note:
1. The operating conditions are assumed to be standard (JIS conditions).
2. These operating values were obtained in a dead room (conversion values).
   Sound level will vary depending on a range of factors such as the construction (acoustic absorption coefficient) of the particular room in which the equipments installed.

dBA

Model	220V, 50/60Hz		240V, 50Hz	
	H	L	H	L
FXCQ20M	32	27	34	29
FXCQ25M FXCQ32M	34	28	36	30
FXCQ40M FXCQ50M	34	29	37	32
FXCQ63M	37	32	39	34
FXCQ80M	39	34	41	36
FXCQ125M	44	38	46	40

Octave Band Level

○——○ 220V 50/60Hz
○- - - -○ 240V 50Hz

FXCQ20MVE

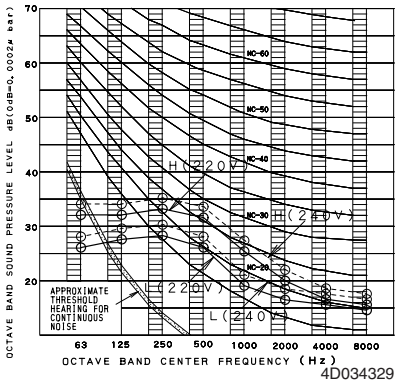

4D034329

FXCQ25 · 32MVE

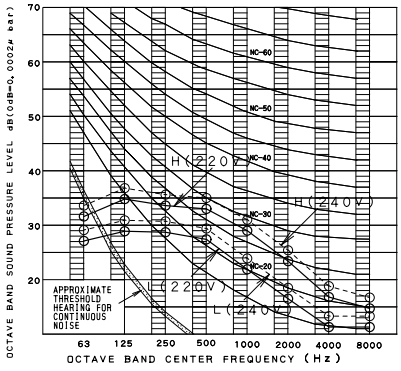

4D034330

FXCQ40 · 50MVE

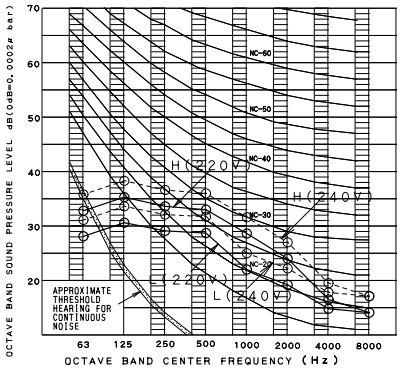

4D034331

FXCQ63MVE

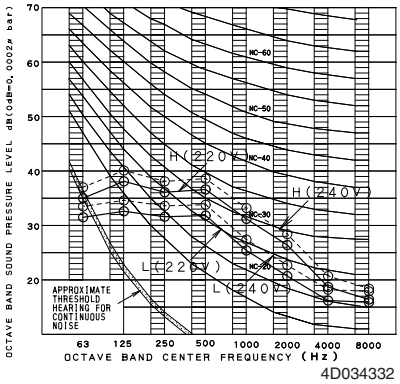

4D034332

FXCQ80MVE

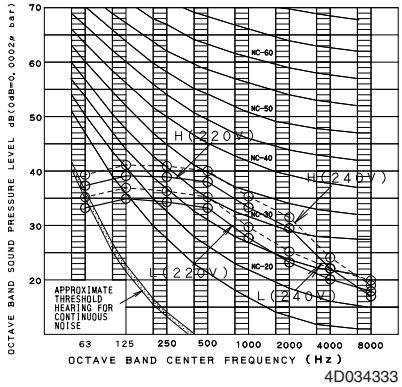

4D034333

FXCQ125MVE

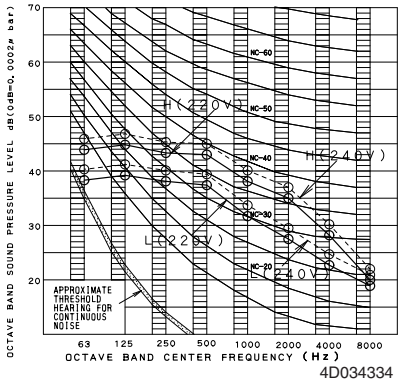

4D034334

10. Installation

Center of Gravity

Unit (mm)

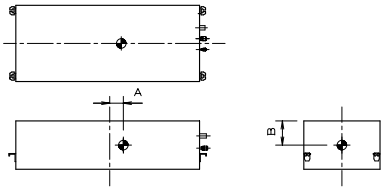

MODEL	A	B
FXCQ20 • 25 • 32MVE	20	140
FXCQ40 • 50MVE	25	
FXCQ63MVE	30	
FXCQ80 • 125MVE	35	150

C : 4D034788A

Service Space

Unit (mm)

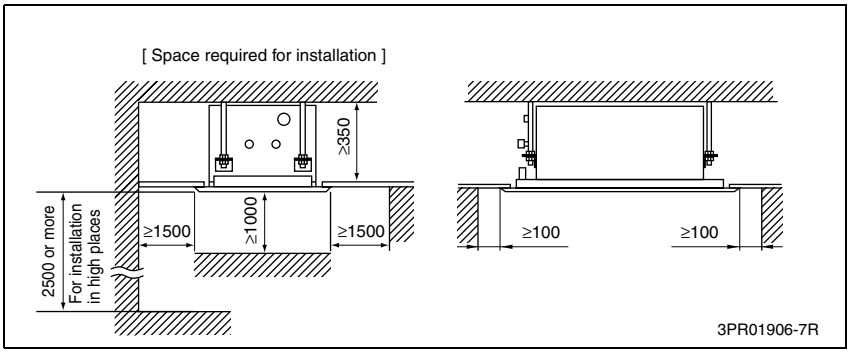

Note:
Above figure means minimum value. Please keep these value at least.

Bolt Pitch

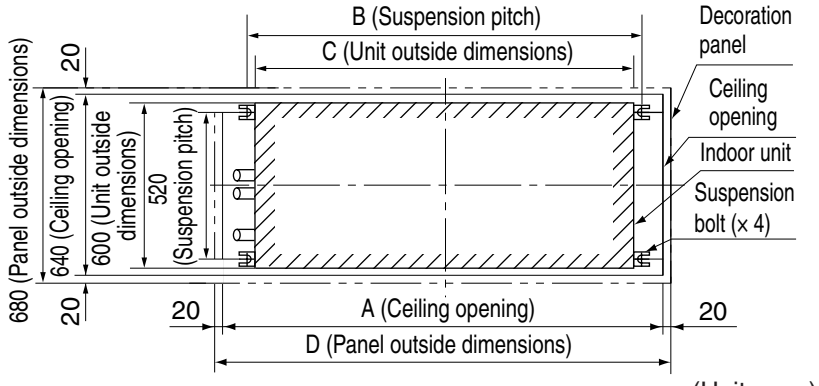

(Unit : mm)

Model	A	B	C	D
FXCQ20 · 25 · 32MVE	990	820	775	1030
FXCQ40 · 50MVE	1205	1035	990	1245
FXCQ63MVE	1390	1220	1175	1430
FXCQ80 · 125MVE	1880	1710	1665	1920

3PR01906-7R

Drain Pump Kit

Indoor unit	Drain pump kit
FXCQ–M	Standard (Equipped with indoor unit)

Drain Piping Work

〈〈**Rig the drain pipe as shown below and take measures against condensation. Improperly rigged piping could lead to leaks and eventually wet furniture and belongings.**〉〉

(1) Carry out the drain piping

- The diameter of the drain pipe should be greater than or equal to the diameter of the connecting pipe (vinyl tube ; pipe size : 25 mm ; outer dimension : 32 mm).
- Keep the drain pipe short and sloping downwards at a gradient of at least 1 / 100 to prevent air pockets from forming.
- If the drain hose cannot be sufficiently set on a slope, execute the drain raising piping.
- To keep the drain hose from sagging, space hanging wires every 1 to 1.5 m.

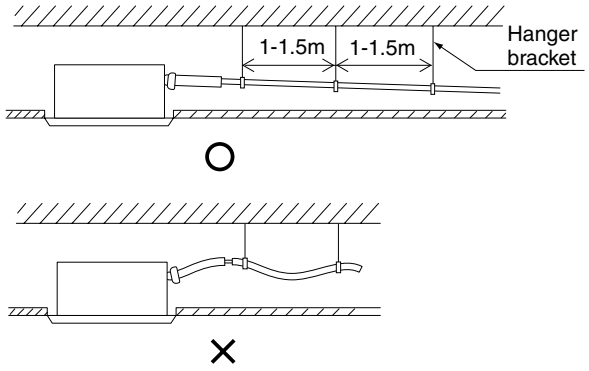

⚠ CAUTION

Setting the unit at an angle opposite to the drain piping might cause leaks.

- Use the drain hose and the metal clamp.
  Insert the drain hose into the drain socket, up to the tape.
  Tighten the clamp until the screw head is less than 4 mm from the hose.
- Wrap the attached sealing pad over the clamp and drain hose to insulate.
- Insulate the drain hose inside the building.

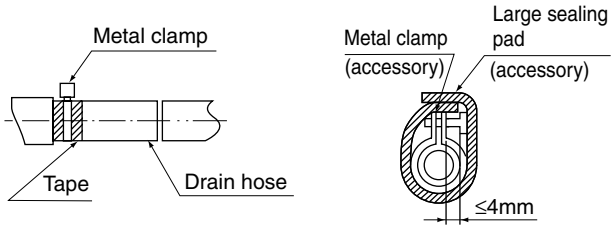

〈 **PRECAUTIONS FOR DRAIN RAISING PIPING** 〉

- Install the drain raising pipes at a height of less than 310 mm.
- Install the drain raising pipes at a right angle to the indoor unit and no more than 300 mm from the unit.

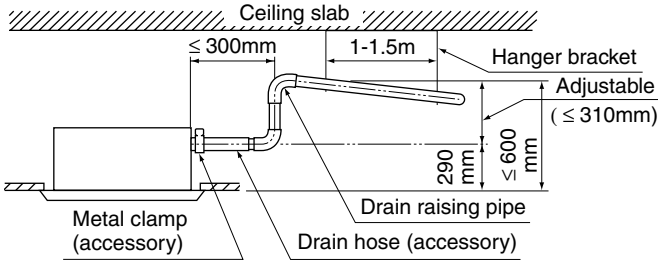

- If converging multiple drain pipes, install according to the procedure shown below.

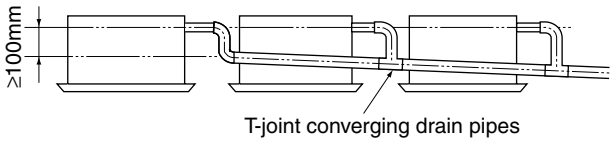

Select converging drain pipes whose gauge is suitable for the operating capacity of the unit.

3PR01906-7R

(2) After piping work is finished, check drainage flows smoothly.

- Open the water inlet lid, add approximately 2.5 liter of water gradually and check drainage flow.

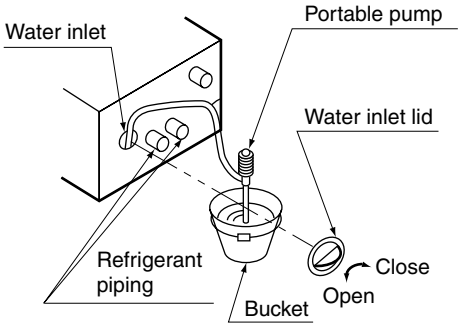

[WHEN ELECTRIC WIRING WORK IS FINISHED]

- Check drainage flow during COOL running, explained under “TEST OPERATION.”

[WHEN ELECTRIC WIRING WORK IS NOT FINISHED]

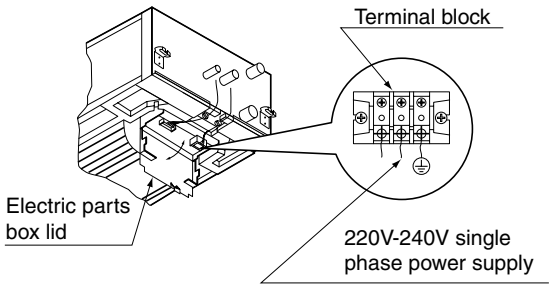

- Remove the electric parts box lid, connect a power supply and remote controller to the terminals. (Refer to the “HOW TO CONNECT WIRINGS”)
  Be sure attach the electric parts box lid before turning on the power.
- Next, press the inspection / test operation button “ TEST ” on the remote controller. The unit will engage the test operation mode. Press the operation mode selector button “ ” until selecting FAN OPERATION “ ”. Then, press the ON / OFF button “ ”. The indoor unit fan and drain pump will start up. Check that the water has drained from the unit. Press “ TEST ” to go back to the first mode.
- **Be careful when doing so because the fan is turning at the same time.**
- Attach the electric parts box lid as before.

⚠ CAUTION

- Drain piping connections
  Do not connect the drain piping directly to sewage pipes that smell of ammonia. The ammonia in the sewage might enter the indoor unit through the drain pipes and corrode the heat exchanger.
- Keep in mind that it will become the cause of getting drain pipe blocked if water collects on drain pipe.

3PR01906-7R

11. Accessories

Standard Accessories

FXCQ20~125M

Name	Metal clamp	Paper pattern for installation	Drain hose	Insulation for fitting	Washer fixing plate	Sealing pad
Quantity	1 pc.	1 pc.	1 pc.	1 each	4 pcs.	1 each
Shape		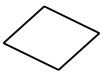		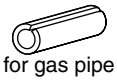 for gas pipe  for liquid pipe	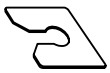	 Large  Small

Name	Washer for hanging bracket	Clamp	Screws (M5)	
Quantity	8 pcs.	8 pcs.	4 pcs.	(Other) • Operation manual • Installation manual
Shape			For paper pattern for installation 	

• Screws for fixing panels are attached to decoration panel.

3PR01906-7R

Optional Accessories (For Unit)

Item \ Type			FXCQ20M FXCQ25M FXCQ32M	FXCQ40M	FXCQ50M	FXCQ63M	FXCQ80M	FXCQ125M
Decoration panel			BYBC32G-W1	BYBC50G-W1		BYBC63G-W1	BYBC125G-W1	
Filter related	∗1 High efficiency filter 65%		KAFJ532G36	KAFJ532G56		KAFJ532G80	KAFJ532G160	
	∗1 High efficiency filter 90%		KAFJ533G36	KAFJ533G56		KAFJ533G80	KAFJ533G160	
	Filter chamber	Bottom suction	KDDFJ53G36	KDDFJ53G56		KDDFJ53G80	KDDFJ53G160	
	Long life replacement filter		KAFJ531G36	KAFJ531G56		KAFJ531G80	KAFJ531G160	

3D035093C

Note:

∗1. Filter chamber is required if installing high efficiency filter.

Optional Accessories (For Controls) : Refer to P.375

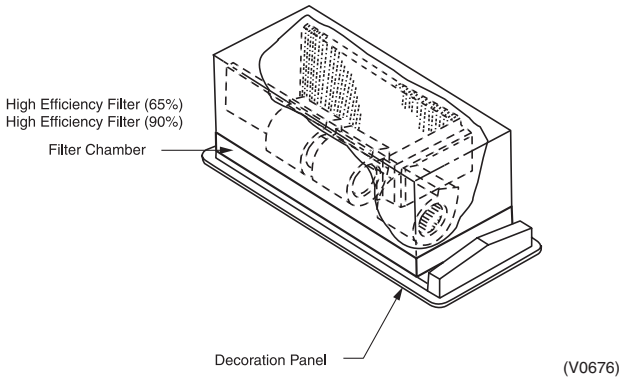

(V0676)

2

Filter Chamber

Specifications

Item \ Model		KDDFJ53G36	KDDFJ53G56	KDDFJ53G80	KDDFJ53G160
External Dimensions (mm)	H	50	50	50	50
	W	780	995	1180	1670
	D	600	600	600	600
Applicable Models		20 · 25 · 32 Class	40 · 50 Class	63 Class	80 · 125 Class

Precaution at use

1. The filter chamber will be needed when the high efficiency filter will be built in. But, it is impossible to build in more than two kinds filter at the same time.

Installation

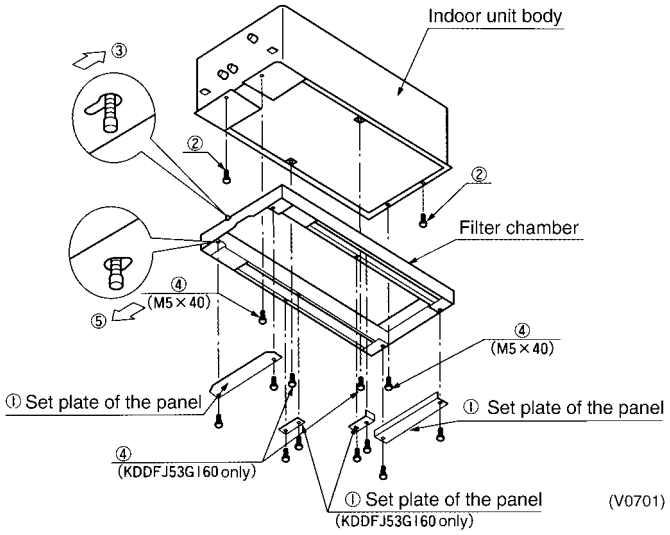

High Efficiency Filter (Filter chamber is required for the high efficiency filter)

Specifications

Item \ Model	KAFJ532G36	KAFJ532G56	KAFJ532G80	KAFJ532G160	KAFJ533G36	KAFJ533G56	KAFJ533G80	KAFJ533G160
External Dimensions (H×W×D)(mm)	(30×460×145) ×2	(30×675×145) ×2	(30×860×145) ×2	(30×660×145) ×4	(30×460×145) ×2	(30×675×145) ×2	(30×860×145) ×2	(30×660×145) ×4
Dust Collection Efficiency (%)	65% (Colorimetric method)				90% (Colorimetric method)			
Initial Pressure Loss (Pa)	29			39	39			49
Final Pressure Loss (Pa)	78				78			
Filter	Non-woven fabric of synthetic fiber				Non-woven fabric of synthetic fiber			
Life Time (h) ∗	2500 hours				2500 hours		2100 hours	2000 hours
Applicable Models	20 · 25 · 32 Class	40 · 50 Class	63 Class	80 · 125 Class	20 · 25 · 32 Class	40 · 50 Class	63 Class	80 · 125 Class

Note:

1. ∗ The life time at the dust density 0.15 mg/m³.
2. Replace the fan motor's capacitor in accordance with the guide in next page, when the high efficiency filter is used.

Installation

■ Installation of the filter frame

Attach the filter frame to the indoor unit, where the original filter was located. (Refer to the operation manual of the indoor unit how to remove the standard filter. The standard filter removed shall not be used.)

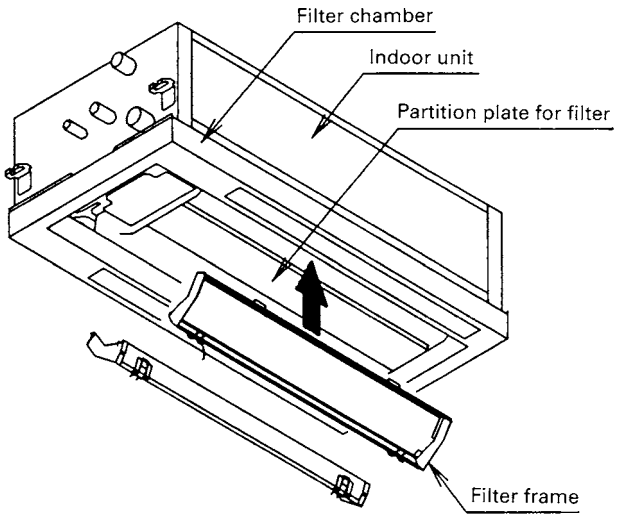

In case of KAFJ532G160 and KAFJ533G160

There are four filter frames of 2 kinds of each having different position of the metal bracket. Install the filter frames to the indoor unit as shown below.

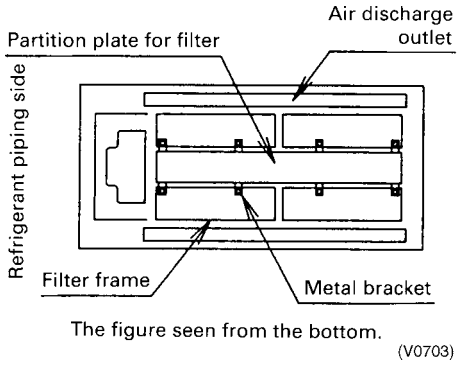

1. Loose the screw of the metal bracket located on each end of the filter frame and hook the filter frame temporarily to the partition plate located at the center of the indoor unit.

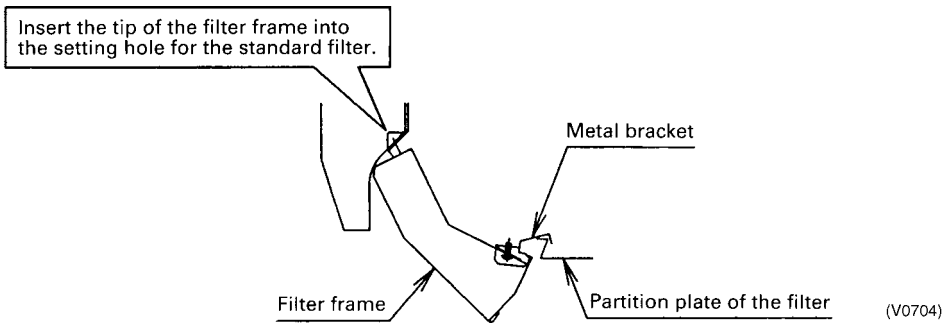

2. Fasten the screw of the metal bracket tightly.

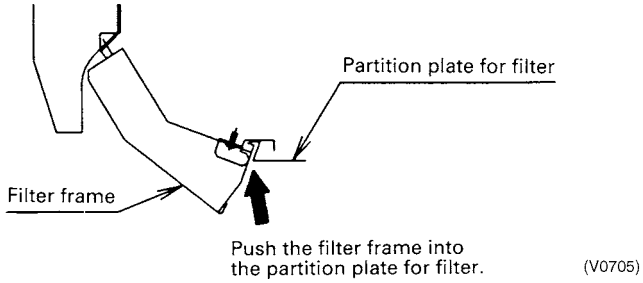

Replacement guide of capacitor for fan motor

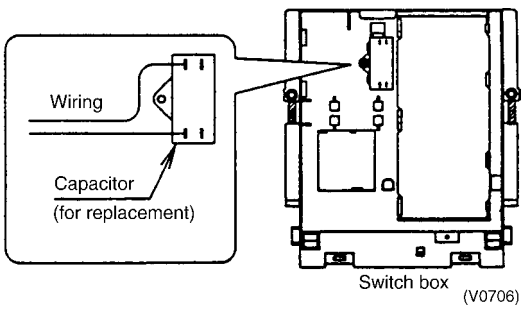

■ Capacity of a capacitor to be replaced.

Model	Capacitor's Capacity	Applicable Models
KAFJ532 · 533G36	2 μF	20 · 25 · 32 Class
KAFJ532 · 533G56	2 μF	40 · 50 Class
KAFJ532 · 533G80	2 μF	63 Class
KAFJ532 · 533G160	4.5 μF	80 Class
	6 μF	125 Class

FXFQ-M
Ceiling Mounted Cassette Type (Multi-Flow)

3

1. Features 44
2. Specifications 45
3. Dimensions 47
4. Piping Diagrams 50
5. Wiring Diagrams 51
6. Electric Characteristics 52
7. Capacity Tables 53
   7.1 Cooling Capacity 53
   7.2 Heating Capacity 54
8. Fan Performance and Discharge Pattern in case of using Branch Duct 55
9. Air Velocity and Temperature Distributions (Reference Data) 58
10. Sound Levels 60
11. Installation 62
12. Accessories 66

1. Features

External Appearance



New Super Cassette type is compact, quiet and easy to install.

- Regardless of their difference in capacity, all indoor units feature the same panel size and design, in consideration of harmonized interior decor.



- The FXFQ25M-80M are thin models (246mm) which can be installed in narrow false ceilings of at least 265mm depth.
- Because of the light weight, suspension is easy.
- Low operating sound

(220V-240V)(dB(A))

Class	25	32	40	50	63	80	100	125
Operating sound (H/L)	30/27	30/27	31/27	32/27	33(34)★/28	36/31	39/33	42(43)★/36

Note: Operating sound may increase more than that when using with 3-way discharge or 2-way discharge, or when using together with a optional kit.
★: The values of Hi mode Sound level represent those during cooling operation. Those during heating operation are shown in brackets for two models only.

- Provided with high lift drain water lift-up mechanism. (Increased lift of drain pipe up to 750mm from the ceiling.)

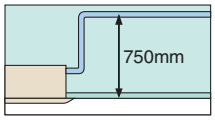

- Installing the fresh air intake is now easier using the new optional kit which requires no special chambers.
- A new long-life filter (maintenance-free period extended from one year to two) is equipped as standard accessory.

- 7 discharge patterns in 2 to 4 directions can be selected to suit the requirements of installation site or the shape of the room.
- The number of installation method using ducts has increased as shown below.

Single branch – 8 patterns

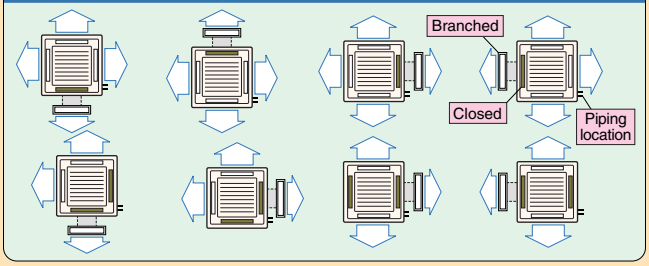

2 branches – 2 patterns

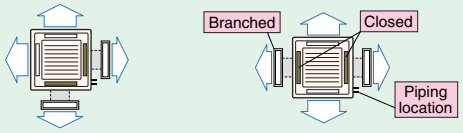

Can also be installed in high ceilings.

		Number of discharge outlets used					
		FXFQ25M-80M			FXFQ100M-125M		
		4-way air discharge	3-way air discharge	2-way air discharge	4-way air discharge	3-way air discharge	2-way air discharge
Ceiling height	Standard	2.7m	3.0m	3.5m	3.2m	3.6m	4.2m
	High ceiling ①	3.0m	3.3m	3.8m	3.6m	4.0m	4.2m
	High ceiling ②	3.5m	3.5m	–	4.2m	4.2m	–

Note: Set standard 4-way discharge when shipped.
High ceiling types① and② will be set for remote control operation

There are 3 patterns in auto swing operation

Pattern *1 Standard setting*

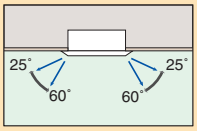

Pattern *2 Draft Prevention setting*

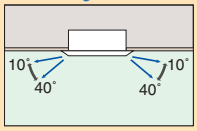

Pattern *3 Setting to prevent soiling of ceiling*

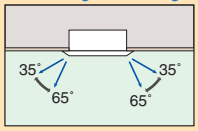

✻Has been set to standard setting at time of shipment.
This can be changed using the remote control

2. Specifications

Ceiling Mounted Cassette Type (Multi-Flow)

Model			FXFQ25MVE	FXFQ32MVE	FXFQ40MVE	FXFQ50MVE
∗1 Cooling Capacity (19.5°CWB)		kcal/h	2,500	3,200	4,000	5,000
		Btu/h	9,900	12,600	16,000	19,800
		kW	2.9	3.7	4.7	5.8
∗2 Cooling Capacity (19.0°CWB)		kW	2.8	3.6	4.5	5.6
∗3 Heating Capacity		kcal/h	2,800	3,400	4,300	5,400
		Btu/h	10,900	13,600	17,100	21,500
		kW	3.2	4.0	5.0	6.3
Casing			Galvanized Steel Plate	Galvanized Steel Plate	Galvanized Steel Plate	Galvanized Steel Plate
Dimensions: (H×W×D)		mm	246×840×840	246×840×840	246×840×840	246×840×840
Coil (Cross Fin Coil)	Rows×Stages×Fin Pitch	mm	2×8×1.2	2×8×1.2	2×8×1.2	2×8×1.2
	Face Area	m²	0.363	0.363	0.363	0.363
Fan	Model		QTS46D14M	QTS46D14M	QTS46D14M	QTS46D14M
	Type		Turbo Fan	Turbo Fan	Turbo Fan	Turbo Fan
	Motor Output × Number of Units	W	30×1	30×1	30×1	30×1
	Air Flow Rate (H/L)	m³/min	13/10	13/10	15/11	16/11
		cfm	459/353	459/353	530/388	565/388
	Drive		Direct Drive	Direct Drive	Direct Drive	Direct Drive
Temperature Control			Microprocessor Thermostat for Cooling and Heating	Microprocessor Thermostat for Cooling and Heating	Microprocessor Thermostat for Cooling and Heating	Microprocessor Thermostat for Cooling and Heating
Sound Absorbing Thermal Insulation Material			Polyurethane Form	Polyurethane Form	Polyurethane Form	Polyurethane Form
Piping Connections	Liquid Pipes	mm	ϕ6.4 (Flare Connection)	ϕ6.4 (Flare Connection)	ϕ6.4 (Flare Connection)	ϕ6.4 (Flare Connection)
	Gas Pipes	mm	ϕ12.7 (Flare Connection)	ϕ12.7 (Flare Connection)	ϕ12.7 (Flare Connection)	ϕ12.7 (Flare Connection)
	Drain Pipe	mm	VP25 (External Dia. 32 Internal Dia. 25)	VP25 (External Dia. 32 Internal Dia. 25)	VP25 (External Dia. 32 Internal Dia. 25)	VP25 (External Dia. 32 Internal Dia. 25)
Machine Weight (Mass)		kg	24	24	24	24
∗5 Sound Level (H/L) (220-240V)		dBA	30/27	30/27	31/27	32/27
Safety Devices			Fuse	Fuse	Fuse	Fuse
Refrigerant Control			Electronic Expansion Valve	Electronic Expansion Valve	Electronic Expansion Valve	Electronic Expansion Valve
Connectable Outdoor Unit			R-410A P Series	R-410A P Series	R-410A P Series	R-410A P Series
Decoration Panels (Option)	Model		BYCP125D-W1	BYCP125D-W1	BYCP125D-W1	BYCP125D-W1
	Panel Color		White (10Y9/0.5)	White (10Y9/0.5)	White (10Y9/0.5)	White (10Y9/0.5)
	Dimensions: (H×W×D)	mm	45×950×950	45×950×950	45×950×950	45×950×950
	Air Filter		Resin Net (with Mold Resistant)	Resin Net (with Mold Resistant)	Resin Net (with Mold Resistant)	Resin Net (with Mold Resistant)
	Weight	kg	5.5	5.5	5.5	5.5
Standard Accessories			Operation Manual. Installation Manual. Paper Pattern for Installation. Drain Hose. Clamp Metal. Washer Fixing Plate. Sealing Pads. Clamps. Screws. Washer for Hanging Bracket. Insulation for Fitting.	Operation Manual. Installation Manual. Paper Pattern for Installation. Drain Hose. Clamp Metal. Washer Fixing Plate. Sealing Pads. Clamps. Screws. Washer for Hanging Bracket. Insulation for Fitting.	Operation Manual. Installation Manual. Paper Pattern for Installation. Drain Hose. Clamp Metal. Washer Fixing Plate. Sealing Pads. Clamps. Screws. Washer for Hanging Bracket. Insulation for Fitting.	Operation Manual. Installation Manual. Paper Pattern for Installation. Drain Hose. Clamp Metal. Washer Fixing Plate. Sealing Pads. Clamps. Screws. Washer for Hanging Bracket. Insulation for Fitting.
Drawing No.			C : 3D038812			

Note:

∗1 Indoor temp. : 27°CDB, 19.5°CWB / outdoor temp. : 35°CDB / Equivalent piping length : 7.5 m, level difference : 0 m.
∗2 Indoor temp. : 27°CDB, 19.0°CWB / outdoor temp. : 35°CDB / Equivalent piping length : 7.5 m, level difference : 0 m.
∗3 Indoor temp. : 20°CDB / outdoor temp. : 7°CDB, 6°CWB / Equivalent piping length : 7.5 m, level difference : 0 m.
4 Capacities are net, including a deduction for cooling (an addition for heating) for indoor fan motor heat.
∗5 Anechoic chamber conversion value, measured at a point 1.5 m downward from the unit center. During actual operation, these values are normally somewhat higher as a result of ambient conditions.
6 Refer to page 52 for Fan Motor Input.

Conversion Formulae
kcal/h=kW×860 Btu/h=kW×3412 cfm=m³/min×35.3

Ceiling Mounted Cassette Type (Multi-Flow)

Model			FXFQ63MVE	FXFQ80MVE	FXFQ100MVE	FXFQ125MVE
∗1 Cooling Capacity (19.5°CWB)		kcal/h	6,300	8,000	10,000	12,500
		Btu/h	24,900	31,700	39,600	49,500
		kW	7.3	9.3	11.6	14.5
∗2 Cooling Capacity (19.0°CWB)		kW	7.1	9.0	11.2	14.0
∗3 Heating Capacity		kcal/h	6,900	8,600	10,800	13,800
		Btu/h	27,300	34,100	42,700	54,600
		kW	8.0	10.0	12.5	16.0
Casing			Galvanized Steel Plate	Galvanized Steel Plate	Galvanized Steel Plate	Galvanized Steel Plate
Dimensions: (H×W×D)		mm	246×840×840	246×840×840	288×840×840	288×840×840
Coil (Cross Fin Coil)	Rows×Stages×Fin Pitch	mm	2×10×1.2	2×10×1.2	2×12×1.2	2×12×1.2
	Face Area	m²	0.454	0.454	0.544	0.544
Fan	Model		QTS46D14M	QTS46D14M	QTS46C17M	QTS46C17M
	Type		Turbo Fan	Turbo Fan	Turbo Fan	Turbo Fan
	Motor Output × Number of Units	W	30×1	30×1	120×1	120×1
	Air Flow Rate (H/L)	m³/min	18.5/14	20/15	26/21	30/24
		cfm	653/494	706/530	918/741	1,059/847
	Drive		Direct Drive	Direct Drive	Direct Drive	Direct Drive
Temperature Control			Microprocessor Thermostat for Cooling and Heating	Microprocessor Thermostat for Cooling and Heating	Microprocessor Thermostat for Cooling and Heating	Microprocessor Thermostat for Cooling and Heating
Sound Absorbing Thermal Insulation Material			Polyurethane Form	Polyurethane Form	Polyurethane Form	Polyurethane Form
Piping Connections	Liquid Pipes	mm	ϕ9.5 (Flare Connection)	ϕ9.5 (Flare Connection)	ϕ9.5 (Flare Connection)	ϕ9.5 (Flare Connection)
	Gas Pipes	mm	ϕ15.9 (Flare Connection)	ϕ15.9 (Flare Connection)	ϕ15.9 (Flare Connection)	ϕ15.9 (Flare Connection)
	Drain Pipe	mm	VP25 (External Dia. 32 Internal Dia. 25)	VP25 (External Dia. 32 Internal Dia. 25)	VP25 (External Dia. 32 Internal Dia. 25)	VP25 (External Dia. 32 Internal Dia. 25)
Machine Weight (Mass)		kg	25	25	29	29
∗5 Sound Level (H/L) (220-240V)		dBA	33/28	36/31	39/33	42/36
Safety Devices			Fuse	Fuse	Fuse	Fuse
Refrigerant Control			Electronic Expansion Valve	Electronic Expansion Valve	Electronic Expansion Valve	Electronic Expansion Valve
Connectable Outdoor Unit			R-410A P Series	R-410A P Series	R-410A P Series	R-410A P Series
Decoration Panels (Option)	Model		BYCP125D-W1	BYCP125D-W1	BYCP125D-W1	BYCP125D-W1
	Panel Color		White (10Y9/0.5)	White (10Y9/0.5)	White (10Y9/0.5)	White (10Y9/0.5)
	Dimensions: (H×W×D)	mm	45×950×950	45×950×950	45×950×950	45×950×950
	Air Filter		Resin Net (with Mold Resistant)	Resin Net (with Mold Resistant)	Resin Net (with Mold Resistant)	Resin Net (with Mold Resistant)
	Weight	kg	5.5	5.5	5.5	5.5
Standard Accessories			Operation Manual. Installation Manual. Paper Pattern for Installation. Drain Hose. Clamp Metal. Washer Fixing Plate. Sealing Pads. Clamps. Screws. Washer for Hanging Bracket. Insulation for Fitting.	Operation Manual. Installation Manual. Paper Pattern for Installation. Drain Hose. Clamp Metal. Washer Fixing Plate. Sealing Pads. Clamps. Screws. Washer for Hanging Bracket. Insulation for Fitting.	Operation Manual. Installation Manual. Paper Pattern for Installation. Drain Hose. Clamp Metal. Washer Fixing Plate. Sealing Pads. Clamps. Screws. Washer for Hanging Bracket. Insulation for Fitting.	Operation Manual. Installation Manual. Paper Pattern for Installation. Drain Hose. Clamp Metal. Washer Fixing Plate. Sealing Pads. Clamps. Screws. Washer for Hanging Bracket. Insulation for Fitting.
Drawing No.			C : 3D038812			

Note:

∗1 Indoor temp. : 27°CDB, 19.5°CWB / outdoor temp. : 35°CDB / Equivalent piping length : 7.5 m, level difference : 0 m.
∗2 Indoor temp. : 27°CDB, 19.0°CWB / outdoor temp. : 35°CDB / Equivalent piping length : 7.5 m, level difference : 0 m.
∗3 Indoor temp. : 20°CDB / outdoor temp. : 7°CDB, 6°CWB / Equivalent piping length : 7.5 m, level difference : 0 m.
4 Capacities are net, including a deduction for cooling (an addition for heating) for indoor fan motor heat.
∗5 Anechoic chamber conversion value, measured at a point 1.5 m downward from the unit center. During actual operation, these values are normally somewhat higher as a result of ambient conditions.
6 Refer to page 52 for Fan Motor Input.

Conversion Formulae
kcal/h=kW×860 Btu/h=kW×3412 cfm=m³/min×35.3

3. Dimensions

FXFQ25M + BYCP125D-W1(Decoration Panel)
FXFQ32M + BYCP125D-W1(Decoration Panel)
FXFQ40M + BYCP125D-W1(Decoration Panel)
FXFQ50M + BYCP125D-W1(Decoration Panel)

3D038837

Unit (mm)

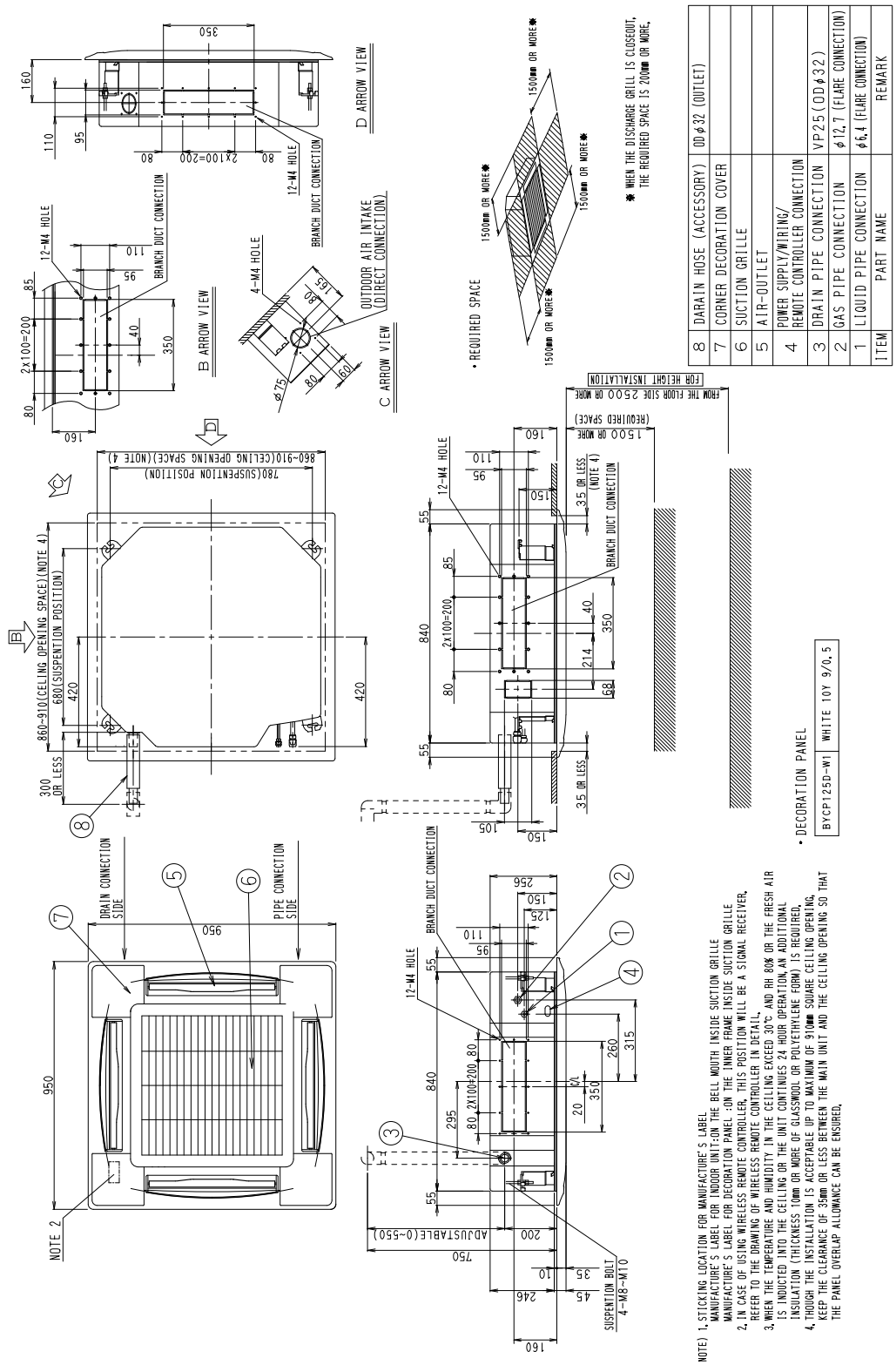

ITEM	PART NAME	REMARK
1	LIQUID PIPE CONNECTION	ϕ6.4 (FLARE CONNECTION)
2	GAS PIPE CONNECTION	ϕ12.7 (FLARE CONNECTION)
3	DRAIN PIPE CONNECTION	VP25(OD ϕ32)
4	POWER SUPPLY/WIRING/ REMOTE CONTROLLER CONNECTION	
5	AIR-OUTLET	
6	SUCTION GRILLE	
7	CORNER DECORATION COVER	
8	DARAIN HOSE (ACCESSORY)	OD ϕ32 (OUTLET)

NOTE) 1. STICKING LOCATION FOR MANUFACTURE'S LABEL
MANUFACTURE'S LABEL FOR INDOOR UNIT:ON THE BELL MOUTH INSIDE SUCTION GRILLE
MANUFACTURE'S LABEL FOR DECORATION PANEL :ON THE INNER FRAME INSIDE SUCTION GRILLE
2. IN CASE OF USING WIRELESS REMOTE CONTROLLER, THIS POSITION WILL BE A SIGNAL RECEIVER. REFER TO THE DRAWING OF WIRELESS REMOTE CONTROLLER IN DETAIL.
3. WHEN THE TEMPERATURE AND HUMIDITY IN THE CEILING EXCEED 30°C AND RH 80% OR THE FRESH AIR IS INDUCTED INTO THE CEILING OR THE UNIT CONTINUES 24 HOUR OPERATION,AN ADDITIONAL INSULATION (THICKNESS 10mm OR MORE OF GLASSWOOL OR POLYETHYLENE FORM) IS REQUIRED.
4. THOUGH THE INSTALLATION IS ACCEPTABLE UP TO MAXIMUM OF 910mm SQUARE CEILING OPENING, KEEP THE CLEARANCE OF 35mm OR LESS BETWEEN THE MAIN UNIT AND THE CEILING OPENING SO THAT THE PANEL OVERLAP ALLOWANCE CAN BE ENSURED.

FXFQ63M + BYCP125D-W1 (Decoration Panel)
FXFQ80M + BYCP125D-W1 (Decoration Panel)

Unit (mm)

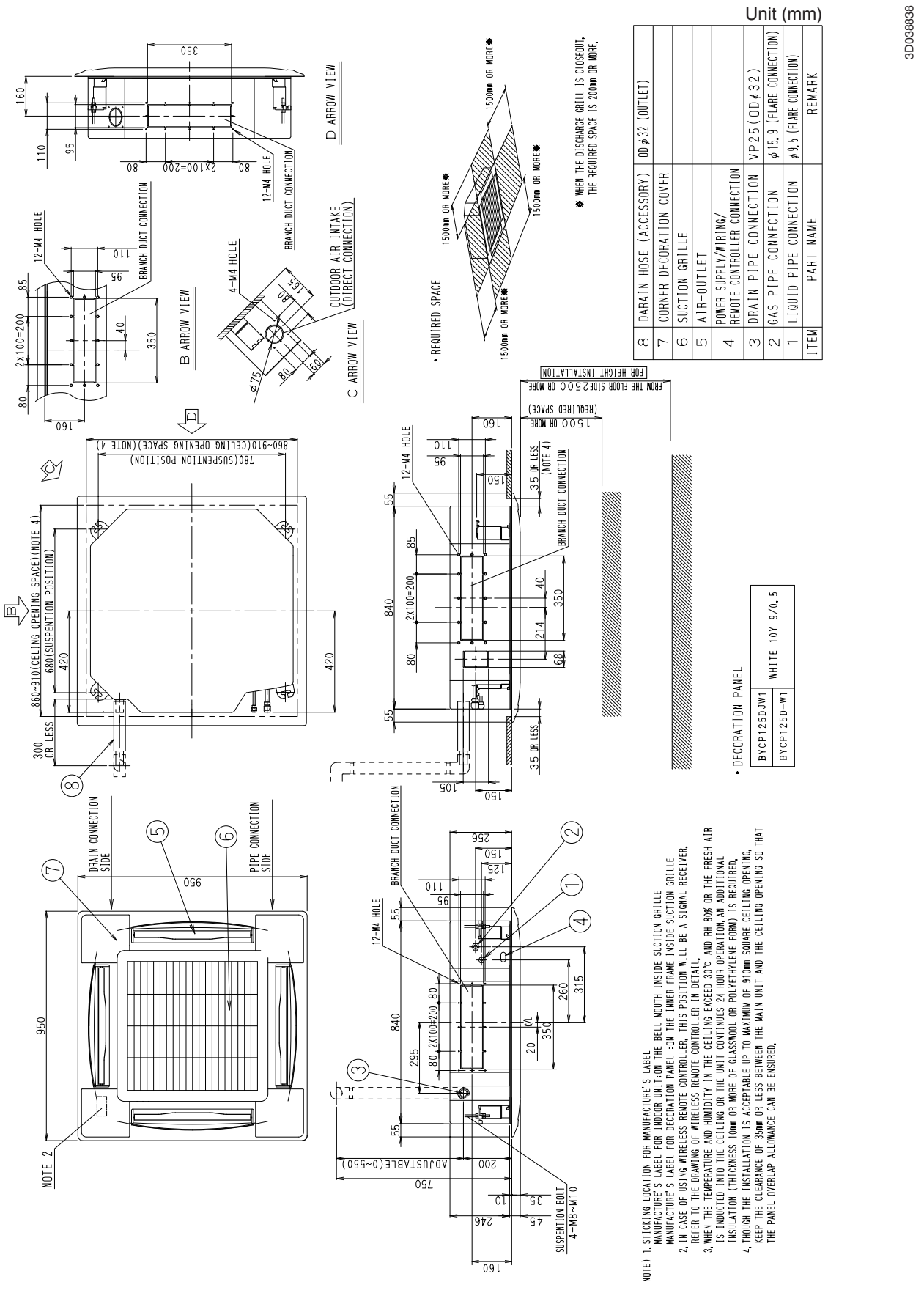

FXFQ100M + BYCP125D-W1 (Decoration Panel)
FXFQ125M + BYCP125D-W1 (Decoration Panel)

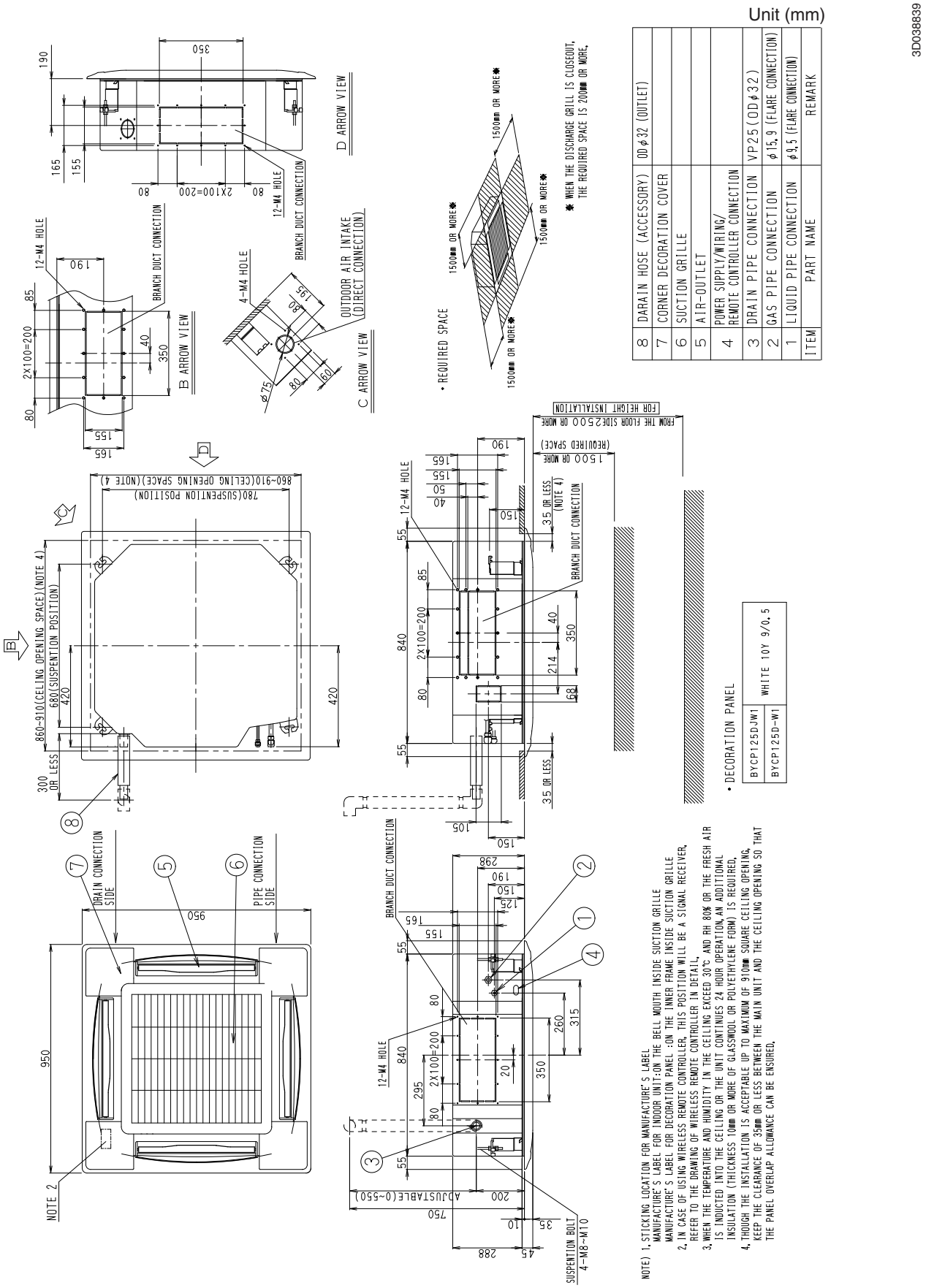

4. Piping Diagrams

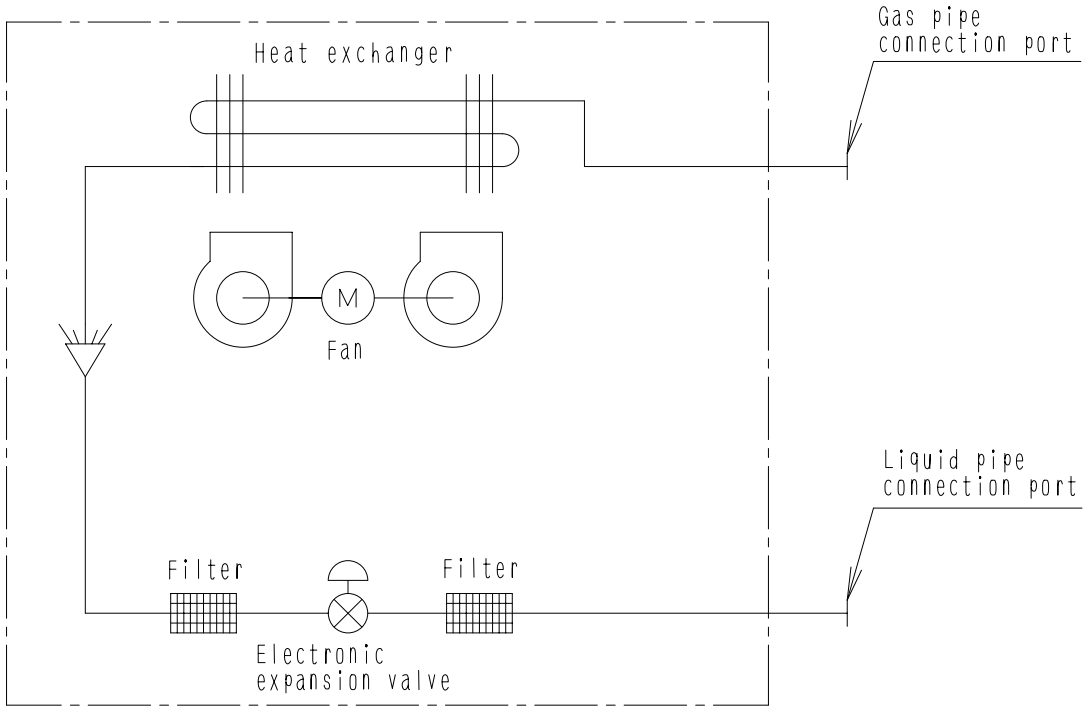

4D024460

■ **Refrigerant pipe connection port diameters**

(mm)

Model	Gas	Liquid
FXFQ25 · 32 · 40 · 50M	ϕ12.7	ϕ6.4
FXFQ63 · 80 · 100 · 125M	ϕ15.9	ϕ9.5

5. Wiring Diagrams

FXFQ25 · 32 · 40 · 50 · 63 · 80 · 100 · 125MVE

3D039600A

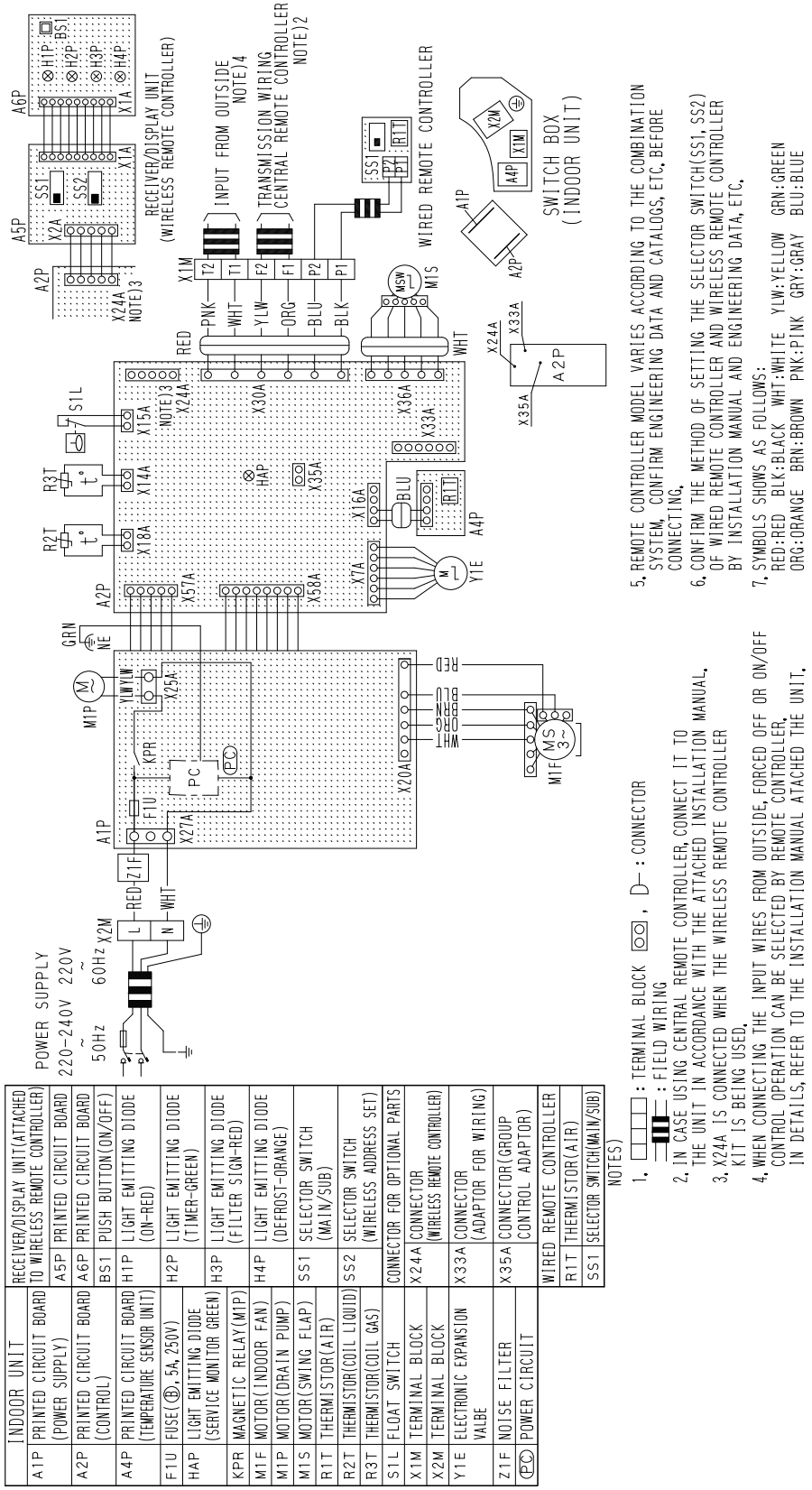

	INDOOR UNIT	RECEIVER/DISPLAY UNIT(ATTACHED TO WIRELESS REMOTE CONTROLLER)
A1P	PRINTED CIRCUIT BOARD (POWER SUPPLY)	A5P PRINTED CIRCUIT BOARD
A2P	PRINTED CIRCUIT BOARD (CONTROL)	A6P PRINTED CIRCUIT BOARD
		BS1 PUSH BUTTON(ON/OFF)
A4P	PRINTED CIRCUIT BOARD (TEMPERATURE SENSOR UNIT)	H1P LIGHT EMITTING DIODE (ON-RED)
F1U	FUSE(Ⓑ, 5A, 250V)	H2P LIGHT EMITTING DIODE (TIMER-GREEN)
HAP	LIGHT EMITTING DIODE (SERVICE MONITOR GREEN)	H3P LIGHT EMITTING DIODE (FILTER SIGN-RED)
KPR	MAGNETIC RELAY(M1P)	H4P LIGHT EMITTING DIODE (DEFROST-ORANGE)
M1F	MOTOR(INDOOR FAN)	
M1P	MOTOR(DRAIN PUMP)	
M1S	MOTOR(SWING FLAP)	SS1 SELECTOR SWITCH (MAIN/SUB)
R1T	THERMISTOR(AIR)	
R2T	THERMISTOR(COIL LIQUID)	SS2 SELECTOR SWITCH (WIRELESS ADDRESS SET)
R3T	THERMISTOR(COIL GAS)	
S1L	FLOAT SWITCH	CONNECTOR FOR OPTIONAL PARTS
X1M	TERMINAL BLOCK	X24A CONNECTOR (WIRELESS REMOTE CONTROLLER)
X2M	TERMINAL BLOCK	
Y1E	ELECTRONIC EXPANSION VALBE	X33A CONNECTOR (ADAPTOR FOR WIRING)
Z1F	NOISE FILTER	X35A CONNECTOR(GROUP CONTROL ADAPTOR)
(PC)	POWER CIRCUIT	
		WIRED REMOTE CONTROLLER
		R1T THERMISTOR(AIR)
		SS1 SELECTOR SWITCH(MAIN/SUB)

NOTES)

1. □□□□: TERMINAL BLOCK ⊙⊙, ⊃—: CONNECTOR
   ▬▬: FIELD WIRING
2. IN CASE USING CENTRAL REMOTE CONTROLLER, CONNECT IT TO THE UNIT IN ACCORDANCE WITH THE ATTACHED INSTALLATION MANUAL.
3. X24A IS CONNECTED WHEN THE WIRELESS REMOTE CONTROLLER KIT IS BEING USED.
4. WHEN CONNECTING THE INPUT WIRES FROM OUTSIDE, FORCED OFF OR ON/OFF CONTROL OPERATION CAN BE SELECTED BY REMOTE CONTROLLER, IN DETAILS, REFER TO THE INSTALLATION MANUAL ATACHED THE UNIT.
5. REMOTE CONTROLLER MODEL VARIES ACCORDING TO THE COMBINATION SYSTEM, CONFIRM ENGINEERING DATA AND CATALOGS, ETC, BEFORE CONNECTING.
6. CONFIRM THE METHOD OF SETTING THE SELECTOR SWITCH(SS1, SS2) OF WIRED REMOTE CONTROLLER AND WIRELESS REMOTE CONTROLLER BY INSTALLATION MANUAL AND ENGINEERING DATA, ETC.
7. SYMBOLS SHOWS AS FOLLOWS:
   RED:RED BLK:BLACK WHT:WHITE YLW:YELLOW GRN:GREEN
   ORG:ORANGE BRN:BROWN PNK:PINK GRY:GRAY BLU:BLUE

6. Electric Characteristics

Units					Power supply		IFM		Input(W)	
Model	Type	Hz	Volts	Voltage range	MCA	MFA	kW	FLA	Cooling	Heating
FXFQ25M	VE	50	220-240	MAX. 264 Min. 198	0.3	15	0.030	0.2	43	30
FXFQ32M					0.3	15	0.030	0.2	43	30
FXFQ40M					0.3	15	0.030	0.2	47	34
FXFQ50M					0.3	15	0.030	0.2	53	38
FXFQ63M					0.4	15	0.030	0.3	67	54
FXFQ80M					0.5	15	0.030	0.4	94	76
FXFQ100M					0.6	15	0.120	0.5	89	94
FXFQ125M					0.9	15	0.120	0.7	121	125
FXFQ25M	VE	60	220	MAX. 242 Min. 198	0.3	15	0.030	0.2	42	30
FXFQ32M					0.3	15	0.030	0.2	42	30
FXFQ40M					0.3	15	0.030	0.2	46	34
FXFQ50M					0.3	15	0.030	0.2	51	38
FXFQ63M					0.4	15	0.030	0.3	66	54
FXFQ80M					0.5	15	0.030	0.4	93	76
FXFQ100M					0.6	15	0.120	0.5	88	94
FXFQ125M					0.9	15	0.120	0.7	120	125

Symbols:

MCA : Min. Circuit Amps (A)
MFA : Max. Fuse Amps (See note 5)
kW : Fan Motor Rated Output(kW)
FLA : Full Load Amps(A)
IFM : Indoor Fan Motor

Note:

1. Voltage range

   Units are suitable for use on electrical systems where voltage supplied to unit terminals is not below or above listed range limits.

2. Maximum allowable voltage unbalance between phases is 2%.

3. MCA/MFA

   MCA = 1.25 X FLA

   MFA ≦ 4 X FLA

   (Next lower standard fuse rating. Min.15A)

4. Select wire size based on the MCA.

5. Instead of fuse, use Circuit Breaker.

C : 4D034264B

7. Capacity Tables

7.1 Cooling Capacity

FXFQ-M **[50/60Hz]**

Cooling capacity

Unit Size	Outdoor air temp. °CDB	Indoor air temp. 14.0°CWB 20°CDB TC	SHC	16.0°CWB 23°CDB TC	SHC	18.0°CWB 26°CDB TC	SHC	19.0°CWB 27°CDB TC	SHC	20.0°CWB 28°CDB TC	SHC	22.0°CWB 30°CDB TC	SHC	24.0°CWB 32°CDB TC	SHC
25	10.0	1.9	1.9	2.3	2.1	2.6	2.3	2.8	2.3	3.0	2.3	3.4	2.4	3.7	2.4
	12.0	1.9	1.9	2.3	2.1	2.6	2.3	2.8	2.3	3.0	2.3	3.4	2.4	3.6	2.3
	14.0	1.9	1.9	2.3	2.1	2.6	2.3	2.8	2.3	3.0	2.3	3.4	2.4	3.5	2.3
	16.0	1.9	1.9	2.3	2.1	2.6	2.3	2.8	2.3	3.0	2.3	3.4	2.4	3.5	2.3
	18.0	1.9	1.9	2.3	2.1	2.6	2.3	2.8	2.3	3.0	2.3	3.4	2.4	3.4	2.2
	20.0	1.9	1.9	2.3	2.1	2.6	2.3	2.8	2.3	3.0	2.3	3.4	2.4	3.4	2.2
	21.0	1.9	1.9	2.3	2.1	2.6	2.3	2.8	2.3	3.0	2.3	3.3	2.3	3.3	2.2
	23.0	1.9	1.9	2.3	2.1	2.6	2.3	2.8	2.3	3.0	2.3	3.3	2.3	3.3	2.1
	25.0	1.9	1.9	2.3	2.1	2.6	2.3	2.8	2.3	3.0	2.3	3.2	2.2	3.2	2.1
	27.0	1.9	1.9	2.3	2.1	2.6	2.3	2.8	2.3	3.0	2.3	3.1	2.2	3.2	2.1
	29.0	1.9	1.9	2.3	2.1	2.6	2.3	2.8	2.3	3.0	2.3	3.1	2.2	3.1	2.1
	31.0	1.9	1.9	2.3	2.1	2.6	2.3	2.8	2.3	3.0	2.3	3.0	2.2	3.1	2.1
	33.0	1.9	1.9	2.3	2.1	2.6	2.3	2.8	2.3	3.0	2.3	3.0	2.2	3.0	2.1
	35.0	1.9	1.9	2.3	2.1	2.6	2.3	2.8	2.3	2.9	2.3	2.9	2.2	3.0	2.1
	37.0	1.9	1.9	2.3	2.1	2.6	2.3	2.8	2.3	2.9	2.3	2.9	2.2	3.0	2.1
	39.0	1.9	1.9	2.3	2.1	2.6	2.3	2.8	2.4	2.9	2.3	2.9	2.2	3.0	2.1
32	10.0	2.4	2.4	2.9	2.6	3.4	2.8	3.6	2.9	3.8	2.9	4.3	2.9	4.7	2.9
	12.0	2.4	2.4	2.9	2.6	3.4	2.8	3.6	2.9	3.8	2.9	4.3	2.9	4.6	2.9
	14.0	2.4	2.4	2.9	2.6	3.4	2.8	3.6	2.9	3.8	2.9	4.3	2.9	4.6	2.8
	16.0	2.4	2.4	2.9	2.6	3.4	2.8	3.6	2.9	3.8	2.9	4.3	2.9	4.5	2.8
	18.0	2.4	2.4	2.9	2.6	3.4	2.8	3.6	2.9	3.8	2.9	4.3	2.9	4.4	2.8
	20.0	2.4	2.4	2.9	2.6	3.4	2.8	3.6	2.9	3.8	2.9	4.3	2.9	4.4	2.8
	21.0	2.4	2.4	2.9	2.6	3.4	2.8	3.6	2.9	3.8	2.9	4.2	2.9	4.3	2.7
	23.0	2.4	2.4	2.9	2.6	3.4	2.8	3.6	2.9	3.8	2.9	4.2	2.8	4.3	2.7
	25.0	2.4	2.4	2.9	2.6	3.4	2.8	3.6	2.9	3.8	2.9	4.1	2.8	4.2	2.7
	27.0	2.4	2.4	2.9	2.6	3.4	2.8	3.6	2.9	3.8	2.9	4.1	2.8	4.2	2.6
	29.0	2.4	2.4	2.9	2.6	3.4	2.8	3.6	2.9	3.8	2.9	4.0	2.7	4.1	2.6
	31.0	2.4	2.4	2.9	2.6	3.4	2.8	3.6	2.9	3.8	2.9	3.9	2.7	4.0	2.6
	33.0	2.4	2.4	2.9	2.6	3.4	2.8	3.6	2.9	3.8	2.9	3.9	2.7	4.0	2.6
	35.0	2.4	2.4	2.9	2.6	3.4	2.8	3.6	2.9	3.8	2.9	3.8	2.7	3.9	2.6
	37.0	2.4	2.4	2.9	2.6	3.4	2.8	3.6	2.9	3.7	2.8	3.8	2.7	3.8	2.6
	39.0	2.4	2.4	2.9	2.6	3.4	2.8	3.6	2.9	3.7	2.8	3.8	2.7	3.8	2.6
40	10.0	3.0	3.0	3.6	3.0	4.2	3.3	4.5	3.3	4.8	3.4	5.4	3.5	5.9	3.5
	12.0	3.0	2.7	3.6	3.0	4.2	3.3	4.5	3.3	4.8	3.4	5.4	3.5	5.8	3.4
	14.0	3.0	2.7	3.6	3.0	4.2	3.3	4.5	3.3	4.8	3.4	5.4	3.5	5.8	3.4
	16.0	3.0	2.7	3.6	3.0	4.2	3.3	4.5	3.3	4.8	3.4	5.4	3.5	5.7	3.3
	18.0	3.0	2.7	3.6	3.0	4.2	3.3	4.5	3.3	4.8	3.4	5.4	3.5	5.6	3.3
	20.0	3.0	2.7	3.6	3.0	4.2	3.3	4.5	3.3	4.8	3.4	5.4	3.5	5.5	3.2
	21.0	3.0	2.7	3.6	3.0	4.2	3.3	4.5	3.3	4.8	3.4	5.4	3.5	5.5	3.2
	23.0	3.0	2.7	3.6	3.0	4.2	3.3	4.5	3.3	4.8	3.4	5.3	3.4	5.4	3.2
	25.0	3.0	2.7	3.6	3.0	4.2	3.3	4.5	3.3	4.8	3.4	5.2	3.3	5.3	3.1
	27.0	3.0	2.7	3.6	3.0	4.2	3.3	4.5	3.3	4.8	3.4	5.2	3.3	5.3	3.1
	29.0	3.0	2.7	3.6	3.0	4.2	3.3	4.5	3.3	4.8	3.4	5.1	3.3	5.2	3.1
	31.0	3.0	2.7	3.6	3.0	4.2	3.3	4.5	3.3	4.8	3.4	5.0	3.2	5.1	3.1
	33.0	3.0	2.7	3.6	3.0	4.2	3.3	4.5	3.3	4.8	3.4	4.9	3.2	5.0	3.1
	35.0	3.0	2.7	3.6	3.0	4.2	3.3	4.5	3.3	4.7	3.4	4.9	3.2	5.0	3.0
	37.0	3.0	2.7	3.6	3.0	4.2	3.3	4.5	3.3	4.6	3.3	4.8	3.2	4.9	3.0
	39.0	3.0	2.7	3.6	3.0	4.2	3.3	4.5	3.3	4.6	3.3	4.7	3.1	4.8	3.0
50	10.0	3.8	3.2	4.5	3.6	5.2	3.9	5.6	4.0	6.0	4.1	6.7	4.2	7.4	4.3
	12.0	3.8	3.2	4.5	3.6	5.2	3.9	5.6	4.0	6.0	4.1	6.7	4.2	7.3	4.2
	14.0	3.8	3.2	4.5	3.6	5.2	3.9	5.6	4.0	6.0	4.1	6.7	4.2	7.2	4.2
	16.0	3.8	3.2	4.5	3.6	5.2	3.9	5.6	4.0	6.0	4.1	6.7	4.2	7.1	4.1
	18.0	3.8	3.2	4.5	3.6	5.2	3.9	5.6	4.0	6.0	4.1	6.7	4.2	7.0	4.0
	20.0	3.8	3.2	4.5	3.6	5.2	3.9	5.6	4.0	6.0	4.1	6.7	4.2	6.9	4.0
	21.0	3.8	3.2	4.5	3.6	5.2	3.9	5.6	4.0	6.0	4.1	6.7	4.2	6.8	4.0
	23.0	3.8	3.2	4.5	3.6	5.2	3.9	5.6	4.0	6.0	4.1	6.6	4.2	6.7	3.9
	25.0	3.8	3.2	4.5	3.6	5.2	3.9	5.6	4.0	6.0	4.1	6.5	4.1	6.6	3.9
	27.0	3.8	3.2	4.5	3.6	5.2	3.9	5.6	4.0	6.0	4.1	6.4	4.0	6.6	3.8
	29.0	3.8	3.2	4.5	3.6	5.2	3.9	5.6	4.0	6.0	4.1	6.3	4.0	6.5	3.8
	31.0	3.8	3.2	4.5	3.6	5.2	3.9	5.6	4.0	6.0	4.1	6.2	3.9	6.4	3.8
	33.0	3.8	3.2	4.5	3.6	5.2	3.9	5.6	4.0	6.0	4.1	6.1	3.9	6.3	3.7
	35.0	3.8	3.2	4.5	3.6	5.2	3.9	5.6	4.0	5.9	4.1	6.0	3.9	6.2	3.7
	37.0	3.8	3.2	4.5	3.6	5.2	3.9	5.6	4.0	5.8	4.0	5.9	3.8	6.1	3.7
	39.0	3.8	3.2	4.5	3.6	5.2	3.9	5.6	4.0	5.7	4.0	5.8	3.8	6.0	3.6

Cooling capacity

Unit Size	Outdoor air temp. °CDB	Indoor air temp. 14.0°CWB 20°CDB TC	SHC	16.0°CWB 23°CDB TC	SHC	18.0°CWB 26°CDB TC	SHC	19.0°CWB 27°CDB TC	SHC	20.0°CWB 28°CDB TC	SHC	22.0°CWB 30°CDB TC	SHC	24.0°CWB 32°CDB TC	SHC
63	10.0	4.8	4.2	5.7	4.6	6.6	5.1	7.1	5.2	7.6	5.3	8.5	5.5	9.3	5.6
	12.0	4.8	4.2	5.7	4.6	6.6	5.1	7.1	5.2	7.6	5.3	8.5	5.5	9.2	5.5
	14.0	4.8	4.2	5.7	4.6	6.6	5.1	7.1	5.2	7.6	5.3	8.5	5.5	9.1	5.4
	16.0	4.8	4.2	5.7	4.6	6.6	5.1	7.1	5.2	7.6	5.3	8.5	5.5	9.0	5.3
	18.0	4.8	4.2	5.7	4.6	6.6	5.1	7.1	5.2	7.6	5.3	8.5	5.5	8.8	5.3
	20.0	4.8	4.2	5.7	4.6	6.6	5.1	7.1	5.2	7.6	5.3	8.5	5.5	8.7	5.2
	21.0	4.8	4.2	5.7	4.6	6.6	5.1	7.1	5.2	7.6	5.3	8.4	5.4	8.5	5.1
	23.0	4.8	4.2	5.7	4.6	6.6	5.1	7.1	5.2	7.6	5.3	8.3	5.3	8.4	5.1
	25.0	4.8	4.2	5.7	4.6	6.6	5.1	7.1	5.2	7.6	5.3	8.1	5.3	8.3	5.0
	27.0	4.8	4.2	5.7	4.6	6.6	5.1	7.1	5.2	7.6	5.3	8.0	5.2	8.2	5.0
	29.0	4.8	4.2	5.7	4.6	6.6	5.1	7.1	5.2	7.6	5.3	7.9	5.1	8.1	4.9
	31.0	4.8	4.2	5.7	4.6	6.6	5.1	7.1	5.2	7.6	5.3	7.9	5.1	7.9	4.9
	33.0	4.8	4.2	5.7	4.6	6.6	5.1	7.1	5.2	7.5	5.3	7.7	5.0	7.8	4.8
	35.0	4.8	4.2	5.7	4.6	6.6	5.1	7.1	5.2	7.4	5.2	7.5	4.9	7.7	4.8
	37.0	4.8	4.2	5.7	4.6	6.6	5.1	7.1	5.2	7.4	5.2	7.4	4.9	7.6	4.7
	39.0	4.8	4.2	5.7	4.6	6.6	5.1	7.1	5.3	7.2	5.2	7.4	4.9	7.6	4.7
80	10.0	6.1	5.3	7.2	6.1	8.4	6.7	9.0	7.0	9.6	7.1	10.8	7.3	11.8	7.4
	12.0	6.1	5.3	7.2	6.1	8.4	6.7	9.0	7.0	9.6	7.1	10.8	7.3	11.7	7.3
	14.0	6.1	5.3	7.2	6.1	8.4	6.7	9.0	7.0	9.6	7.1	10.8	7.3	11.5	7.2
	16.0	6.1	5.3	7.2	6.1	8.4	6.7	9.0	7.0	9.6	7.1	10.8	7.3	11.4	7.1
	18.0	6.1	5.3	7.2	6.1	8.4	6.7	9.0	7.0	9.6	7.1	10.8	7.3	11.2	7.0
	20.0	6.1	5.3	7.2	6.1	8.4	6.7	9.0	7.0	9.6	7.1	10.8	7.3	11.1	6.9
	21.0	6.1	5.3	7.2	6.1	8.4	6.7	9.0	7.0	9.6	7.1	10.8	7.3	11.0	6.9
	23.0	6.1	5.3	7.2	6.1	8.4	6.7	9.0	7.0	9.6	7.1	10.6	7.2	10.8	6.8
	25.0	6.1	5.3	7.2	6.1	8.4	6.7	9.0	7.0	9.6	7.1	10.5	7.1	10.7	6.7
	27.0	6.1	5.3	7.2	6.1	8.4	6.7	9.0	7.0	9.6	7.1	10.3	7.0	10.5	6.7
	29.0	6.1	5.3	7.2	6.1	8.4	6.7	9.0	7.0	9.6	7.1	10.2	6.9	10.4	6.6
	31.0	6.1	5.3	7.2	6.1	8.4	6.7	9.0	7.0	9.6	7.1	10.0	6.9	10.2	6.6
	33.0	6.1	5.3	7.2	6.1	8.4	6.7	9.0	7.0	9.6	7.1	9.8	6.8	10.1	6.5
	35.0	6.1	5.3	7.2	6.1	8.4	6.7	9.0	7.0	9.5	7.1	9.7	6.8	9.9	6.5
	37.0	6.1	5.3	7.2	6.1	8.4	6.7	9.0	7.0	9.3	7.0	9.5	6.7	9.8	6.4
	39.0	6.1	5.3	7.2	6.1	8.4	6.7	9.0	7.1	9.2	6.9	9.4	6.6	9.6	6.4
100	10.0	7.6	6.3	9.0	7.0	10.5	7.7	11.2	7.9	11.9	8.1	13.4	8.4	14.7	8.6
	12.0	7.6	6.3	9.0	7.0	10.5	7.7	11.2	7.9	11.9	8.1	13.4	8.4	14.5	8.4
	14.0	7.6	6.3	9.0	7.0	10.5	7.7	11.2	7.9	11.9	8.1	13.4	8.4	14.4	8.3
	16.0	7.6	6.3	9.0	7.0	10.5	7.7	11.2	7.9	11.9	8.1	13.4	8.4	14.2	8.2
	18.0	7.6	6.3	9.0	7.0	10.5	7.7	11.2	7.9	11.9	8.1	13.4	8.4	14.0	8.1
	20.0	7.6	6.3	9.0	7.0	10.5	7.7	11.2	7.9	11.9	8.1	13.4	8.4	13.8	8.0
	21.0	7.6	6.3	9.0	7.0	10.5	7.7	11.2	7.9	11.9	8.1	13.4	8.4	13.7	7.9
	23.0	7.6	6.3	9.0	7.0	10.5	7.7	11.2	7.9	11.9	8.1	13.2	8.3	13.5	7.8
	25.0	7.6	6.3	9.0	7.0	10.5	7.7	11.2	7.9	11.9	8.1	13.0	8.2	13.3	7.8
	27.0	7.6	6.3	9.0	7.0	10.5	7.7	11.2	7.9	11.9	8.1	12.8	8.1	13.1	7.7
	29.0	7.6	6.3	9.0	7.0	10.5	7.7	11.2	7.9	11.9	8.1	12.6	8.0	12.9	7.6
	31.0	7.6	6.3	9.0	7.0	10.5	7.7	11.2	7.9	11.9	8.1	12.4	7.9	12.7	7.5
	33.0	7.6	6.3	9.0	7.0	10.5	7.7	11.2	7.9	11.9	8.1	12.2	7.8	12.5	7.4
	35.0	7.6	6.3	9.0	7.0	10.5	7.7	11.2	7.9	11.8	8.0	12.1	7.7	12.3	7.3
	37.0	7.6	6.3	9.0	7.0	10.5	7.7	11.2	7.9	11.6	7.9	11.9	7.6	12.2	7.3
	39.0	7.6	6.3	9.0	7.0	10.5	7.7	11.2	7.9	11.4	7.8	11.7	7.5	12.0	7.2
125	10.0	9.5	7.7	11.3	8.7	13.1	9.6	14.0	9.8	14.9	10.1	16.8	10.5	18.4	10.7
	12.0	9.5	7.7	11.3	8.7	13.1	9.6	14.0	9.8	14.9	10.1	16.8	10.5	18.2	10.5
	14.0	9.5	7.7	11.3	8.7	13.1	9.6	14.0	9.8	14.9	10.1	16.8	10.5	18.0	10.4
	16.0	9.5	7.7	11.3	8.7	13.1	9.6	14.0	9.8	14.9	10.1	16.8	10.5	17.7	10.2
	18.0	9.5	7.7	11.3	8.7	13.1	9.6	14.0	9.8	14.9	10.1	16.8	10.5	17.5	10.1
	20.0	9.5	7.7	11.3	8.7	13.1	9.6	14.0	9.8	14.9	10.1	16.8	10.5	17.2	10.0
	21.0	9.5	7.7	11.3	8.7	13.1	9.6	14.0	9.8	14.9	10.1	16.8	10.5	17.1	9.9
	23.0	9.5	7.7	11.3	8.7	13.1	9.6	14.0	9.8	14.9	10.1	16.5	10.3	16.9	9.8
	25.0	9.5	7.7	11.3	8.7	13.1	9.6	14.0	9.8	14.9	10.1	16.3	10.2	16.6	9.6
	27.0	9.5	7.7	11.3	8.7	13.1	9.6	14.0	9.8	14.9	10.1	16.1	10.0	16.4	9.6
	29.0	9.5	7.7	11.3	8.7	13.1	9.6	14.0	9.8	14.9	10.1	15.8	9.9	16.2	9.4
	31.0	9.5	7.7	11.3	8.7	13.1	9.6	14.0	9.8	14.9	10.1	15.6	9.8	15.9	9.3
	33.0	9.5	7.7	11.3	8.7	13.1	9.6	14.0	9.8	14.9	10.1	15.3	9.7	15.7	9.2
	35.0	9.5	7.7	11.3	8.7	13.1	9.6	14.0	9.8	14.8	10.0	15.1	9.6	15.4	9.1
	37.0	9.5	7.7	11.3	8.7	13.1	9.6	14.0	9.8	14.5	9.9	14.9	9.5	15.2	9.1
	39.0	9.5	7.7	11.3	8.7	13.1	9.6	14.0	9.9	14.3	9.8	14.6	9.4	15.0	9.0

TC Total capacity ; kW
SHC Sensible heat capacity ; kW

Refer to Outdoor Unit Capacity Tables : on page 339~, for the actual performance data of each indoor and outdoor unit combination.

7.2 Heating Capacity

FXFQ-M [50/60Hz]

[50Hz]

Unit Size	Outdoor air temp. °CDB	Outdoor air temp. °CWB	Heating capacity Indoor air temp. °CDB 16.0 kW	18.0 kW	20.0 kW	21.0 kW	22.0 kW	24.0 kW
25	-19.8	-20.0	1.9	1.9	1.9	1.9	1.9	1.9
	-18.8	-19.0	1.9	1.9	1.9	1.9	1.9	1.9
	-16.7	-17.0	2.1	2.1	2.0	2.0	2.0	2.0
	-14.7	-15.0	2.2	2.2	2.2	2.2	2.2	2.1
	-12.6	-13.0	2.3	2.3	2.3	2.3	2.3	2.3
	-10.5	-11.0	2.4	2.4	2.4	2.4	2.4	2.4
	-9.5	-10.0	2.5	2.4	2.4	2.4	2.4	2.4
	-8.5	-9.1	2.5	2.5	2.5	2.5	2.5	2.5
	-7.0	-7.6	2.6	2.6	2.6	2.6	2.6	2.6
	-5.0	-5.6	2.7	2.7	2.8	2.7	2.7	2.7
	-3.0	-3.7	2.8	2.8	3.0	2.8	2.8	2.8
	0.0	-0.7	3.0	3.0	3.2	3.0	3.0	2.8
	3.0	2.2	3.1	3.1	3.2	3.1	3.0	2.8
	5.0	4.1	3.3	3.2	3.2	3.1	3.0	2.8
	7.0	6.0	3.4	3.4	3.2	3.1	3.0	2.8
	9.0	7.9	3.5	3.4	3.2	3.1	3.0	2.8
	11.0	9.8	3.6	3.4	3.2	3.1	3.0	2.8
	13.0	11.8	3.6	3.4	3.2	3.1	3.0	2.8
	15.0	13.7	3.6	3.4	3.2	3.1	3.0	2.8
32	-19.8	-20.0	2.4	2.4	2.3	2.3	2.3	2.3
	-18.8	-19.0	2.4	2.4	2.4	2.4	2.4	2.4
	-16.7	-17.0	2.6	2.6	2.6	2.6	2.6	2.5
	-14.7	-15.0	2.7	2.7	2.7	2.7	2.7	2.7
	-12.6	-13.0	2.9	2.8	2.8	2.8	2.8	2.8
	-10.5	-11.0	3.0	3.0	3.0	3.0	3.0	3.0
	-9.5	-10.0	3.1	3.1	3.1	3.1	3.0	3.0
	-8.5	-9.1	3.1	3.1	3.2	3.1	3.2	3.1
	-7.0	-7.6	3.2	3.2	3.2	3.2	3.2	3.2
	-5.0	-5.6	3.4	3.4	3.4	3.4	3.4	3.4
	-3.0	-3.7	3.5	3.5	3.5	3.5	3.5	3.5
	0.0	-0.7	3.7	3.7	3.7	3.7	3.7	3.5
	3.0	2.2	3.9	3.9	3.9	3.9	3.7	3.5
	5.0	4.1	4.1	4.2	4.0	3.9	3.7	3.5
	7.0	6.0	4.2	4.3	4.0	3.9	3.7	3.5
	9.0	7.9	4.3	4.3	4.0	3.9	3.7	3.5
	11.0	9.8	4.5	4.3	4.0	3.9	3.7	3.5
	13.0	11.8	4.5	4.3	4.0	3.9	3.7	3.5
	15.0	13.7	4.5	4.3	4.0	3.9	3.7	3.5
40	-19.8	-20.0	3.0	2.9	2.9	2.9	2.9	2.9
	-18.8	-19.0	3.0	3.0	3.0	3.0	3.0	3.0
	-16.7	-17.0	3.2	3.2	3.2	3.2	3.2	3.2
	-14.7	-15.0	3.4	3.4	3.4	3.4	3.4	3.4
	-12.6	-13.0	3.6	3.6	3.7	3.5	3.5	3.5
	-10.5	-11.0	3.7	3.7	3.7	3.7	3.7	3.7
	-9.5	-10.0	3.8	3.8	3.8	3.8	3.8	3.8
	-8.5	-9.1	3.9	3.9	3.9	3.9	3.9	3.9
	-7.0	-7.6	4.0	4.0	4.0	4.0	4.0	4.0
	-5.0	-5.6	4.2	4.2	4.2	4.2	4.2	4.2
	-3.0	-3.7	4.4	4.4	4.6	4.4	4.4	4.4
	0.0	-0.7	4.7	4.6	4.6	4.6	4.6	4.4
	3.0	2.2	4.9	4.9	4.9	4.8	4.7	4.4
	5.0	4.1	5.2	5.1	5.0	4.8	4.7	4.4
	7.0	6.0	5.4	5.3	5.0	4.8	4.7	4.4
	9.0	7.9	5.6	5.3	5.0	4.8	4.7	4.4
	11.0	9.8	5.6	5.3	5.0	4.8	4.7	4.4
	13.0	11.8	5.6	5.3	5.0	4.8	4.7	4.4
	15.0	13.7	5.6	5.3	5.0	4.8	4.7	4.4
50	-19.8	-20.0	3.7	3.7	3.7	3.7	3.7	3.7
	-18.8	-19.0	3.8	3.8	3.8	3.8	3.8	3.8
	-16.7	-17.0	4.1	4.0	4.0	4.0	4.0	4.0
	-14.7	-15.0	4.3	4.3	4.3	4.2	4.2	4.2
	-12.6	-13.0	4.5	4.5	4.5	4.5	4.5	4.5
	-10.5	-11.0	4.7	4.7	4.7	4.7	4.7	4.7
	-9.5	-10.0	4.8	4.8	4.8	4.8	4.8	4.8
	-8.5	-9.1	4.9	4.9	4.9	4.9	4.9	4.9
	-7.0	-7.6	5.1	5.1	5.1	5.1	5.1	5.1
	-5.0	-5.6	5.3	5.3	5.3	5.3	5.3	5.3
	-3.0	-3.7	5.5	5.5	5.5	5.5	5.5	5.5
	0.0	-0.7	5.9	5.9	5.8	5.8	5.8	5.5
	3.0	2.2	6.2	6.2	6.2	6.1	5.9	5.5
	5.0	4.1	6.4	6.4	6.3	6.1	5.9	5.5
	7.0	6.0	6.6	6.6	6.3	6.1	5.9	5.5
	9.0	7.9	6.8	6.7	6.3	6.1	5.9	5.5
	11.0	9.8	7.0	6.7	6.3	6.1	5.9	5.5
	13.0	11.8	7.1	6.7	6.3	6.1	5.9	5.5
	15.0	13.7	7.1	6.7	6.3	6.1	5.9	5.5

[50Hz]

Unit Size	Outdoor air temp. °CDB	Outdoor air temp. °CWB	Heating capacity Indoor air temp. °CDB 16.0 kW	18.0 kW	20.0 kW	21.0 kW	22.0 kW	24.0 kW
63	-19.8	-20.0	4.7	4.7	4.7	4.7	4.7	4.7
	-18.8	-19.0	4.9	4.9	4.8	4.8	4.8	4.8
	-16.7	-17.0	5.1	5.1	5.1	5.1	5.1	5.1
	-14.7	-15.0	5.4	5.4	5.4	5.4	5.4	5.4
	-12.6	-13.0	5.7	5.7	5.7	5.7	5.7	5.7
	-10.5	-11.0	6.0	6.0	6.0	6.0	6.0	5.9
	-9.5	-10.0	6.1	6.1	6.1	6.1	6.1	6.1
	-8.5	-9.1	6.3	6.3	6.2	6.2	6.2	6.2
	-7.0	-7.6	6.5	6.5	6.4	6.4	6.4	6.4
	-5.0	-5.6	6.8	6.7	6.7	6.7	6.7	6.7
	-3.0	-3.7	7.0	7.0	7.0	7.0	7.0	7.0
	0.0	-0.7	7.5	7.4	7.4	7.4	7.4	7.0
	3.0	2.2	7.9	7.8	8.0	7.7	7.5	7.0
	5.0	4.1	8.1	8.1	8.0	7.7	7.5	7.0
	7.0	6.0	8.4	8.4	8.0	7.7	7.5	7.0
	9.0	7.9	8.7	8.5	8.0	7.7	7.5	7.0
	11.0	9.8	8.9	8.5	8.0	7.7	7.5	7.0
	13.0	11.8	9.0	8.5	8.0	7.7	7.5	7.0
	15.0	13.7	9.0	8.5	8.0	7.7	7.5	7.0
80	-19.8	-20.0	5.9	5.9	5.9	5.9	5.9	5.8
	-18.8	-19.0	6.1	6.1	6.0	6.0	6.0	6.0
	-16.7	-17.0	6.4	6.4	6.4	6.4	6.4	6.4
	-14.7	-15.0	6.8	6.8	6.8	6.7	6.7	6.7
	-12.6	-13.0	7.1	7.1	7.1	7.1	7.1	7.1
	-10.5	-11.0	7.5	7.5	7.5	7.5	7.4	7.4
	-9.5	-10.0	7.7	7.7	7.6	7.6	7.6	7.6
	-8.5	-9.1	7.8	7.8	7.8	7.8	7.8	7.8
	-7.0	-7.6	8.1	8.1	8.1	8.1	8.0	8.0
	-5.0	-5.6	8.4	8.4	8.4	8.4	8.4	8.4
	-3.0	-3.7	8.8	8.8	8.7	8.7	8.7	8.7
	0.0	-0.7	9.3	9.3	9.3	9.3	9.3	8.7
	3.0	2.2	9.8	9.8	9.8	9.7	9.4	8.7
	5.0	4.1	10.2	10.1	10.0	9.7	9.4	8.7
	7.0	6.0	10.5	10.6	10.0	9.7	9.4	8.7
	9.0	7.9	10.8	10.6	10.0	9.7	9.4	8.7
	11.0	9.8	11.2	10.6	10.0	9.7	9.4	8.7
	13.0	11.8	11.3	10.6	10.0	9.7	9.4	8.7
	15.0	13.7	11.3	10.6	10.0	9.7	9.4	8.7
100	-19.8	-20.0	7.4	7.4	7.3	7.3	7.3	7.3
	-18.8	-19.0	7.6	7.6	7.6	7.5	7.5	7.5
	-16.7	-17.0	8.0	8.0	8.0	8.0	8.0	8.0
	-14.7	-15.0	8.5	8.5	8.4	8.4	8.4	8.4
	-12.6	-13.0	8.9	8.9	8.9	8.9	8.9	8.8
	-10.5	-11.0	9.3	9.3	9.3	9.3	9.3	9.3
	-9.5	-10.0	9.4	9.6	9.5	9.5	9.5	9.5
	-8.5	-9.1	9.8	9.8	9.7	9.7	9.7	9.7
	-7.0	-7.6	10.1	10.1	10.1	10.1	10.1	10.0
	-5.0	-5.6	10.6	10.6	10.5	10.5	10.5	10.5
	-3.0	-3.7	11.0	11.0	10.9	10.9	10.9	10.9
	0.0	-0.7	11.6	11.6	11.6	12.2	11.6	10.9
	3.0	2.2	12.3	12.3	12.2	12.1	11.7	10.9
	5.0	4.1	12.7	12.7	12.5	12.1	11.7	10.9
	7.0	6.0	13.1	13.1	12.5	12.1	11.7	10.9
	9.0	7.9	13.5	13.3	12.5	12.1	11.7	10.9
	11.0	9.8	14.0	13.3	12.5	12.1	11.7	10.9
	13.0	11.8	14.1	13.3	12.5	12.1	11.7	10.9
	15.0	13.7	14.1	13.3	12.5	12.1	11.7	10.9
125	-19.8	-20.0	9.4	9.4	9.4	9.4	9.4	9.3
	-18.8	-19.0	9.7	9.7	9.7	9.7	9.6	9.6
	-16.7	-17.0	10.3	10.3	10.2	10.2	10.2	10.2
	-14.7	-15.0	10.9	10.8	10.8	10.8	10.8	10.7
	-12.6	-13.0	11.4	11.4	11.4	11.4	11.3	11.3
	-10.5	-11.0	12.0	12.0	11.9	11.9	11.9	11.9
	-9.5	-10.0	12.3	12.2	12.2	12.2	12.2	12.2
	-8.5	-9.1	12.5	12.5	12.5	12.5	12.4	12.4
	-7.0	-7.6	13.0	12.9	12.9	12.9	12.9	12.8
	-5.0	-5.6	13.5	13.5	13.5	13.4	13.4	13.4
	-3.0	-3.7	14.1	14.0	14.0	14.0	14.0	13.9
	0.0	-0.7	14.9	14.9	14.8	14.8	14.8	13.9
	3.0	2.2	15.7	15.7	15.5	15.5	15.0	13.9
	5.0	4.1	16.3	16.2	16.0	15.5	15.0	13.9
	7.0	6.0	16.8	16.8	16.0	15.5	15.0	13.9
	9.0	7.9	17.3	17.0	16.0	15.5	15.0	13.9
	11.0	9.8	18.1	17.0	16.0	15.5	15.0	13.9
	13.0	11.8	18.1	17.0	16.0	15.5	15.0	13.9
	15.0	13.7	18.1	17.0	16.0	15.5	15.0	13.9

Refer to Outdoor Unit Capacity Tables : on page 342~, for the actual performance data of each indoor and outdoor unit combination.

8. Fan Performance and Discharge Pattern in case of using Branch Duct

Single Branch — 3 Way Discharge

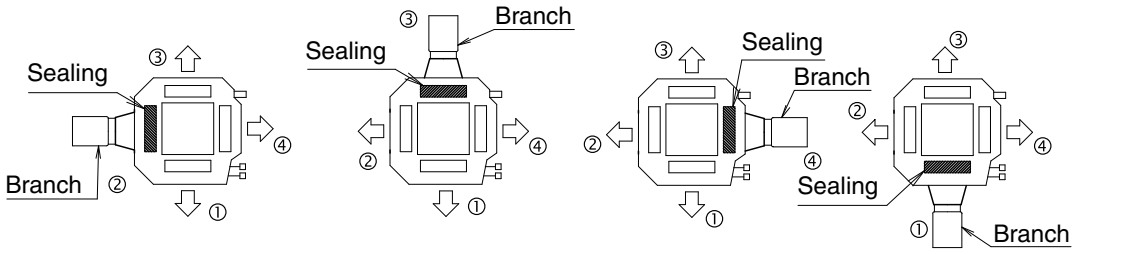

(V0690)

25~80

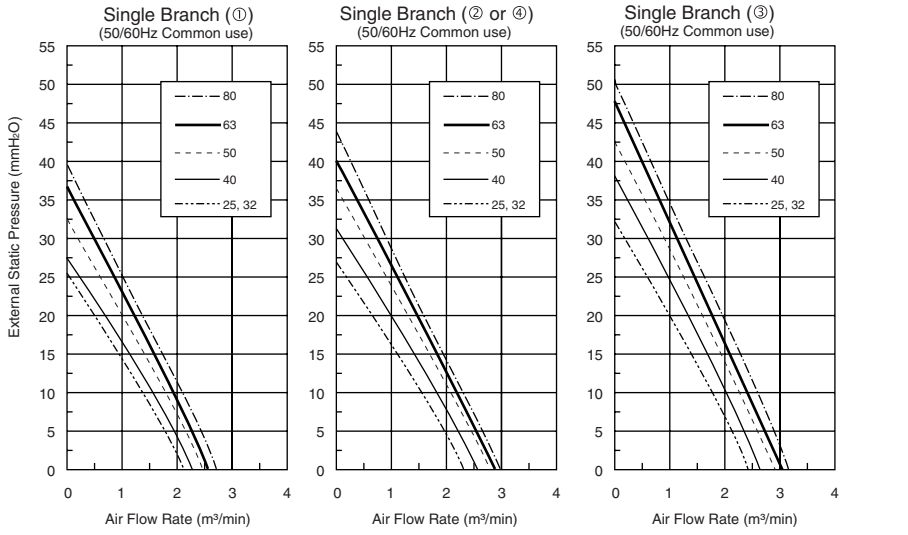

(V0691)

100 · 125

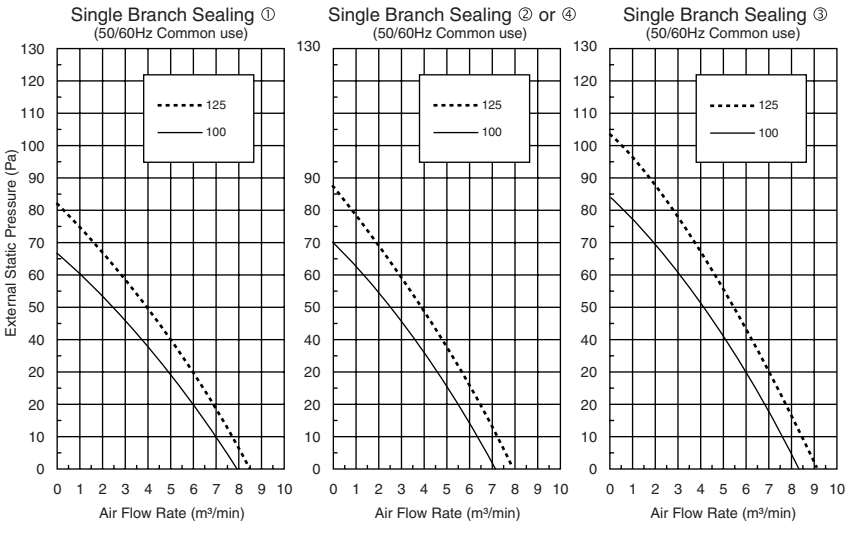

(V0692)

Single Branch — 2 Way Discharge

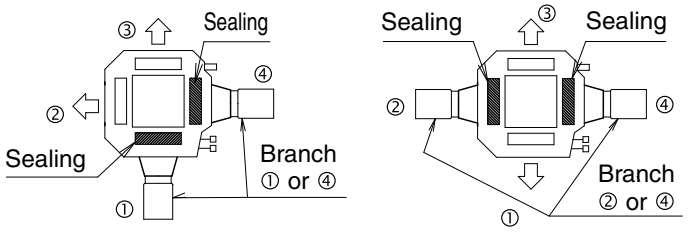

(V0693)

25~80

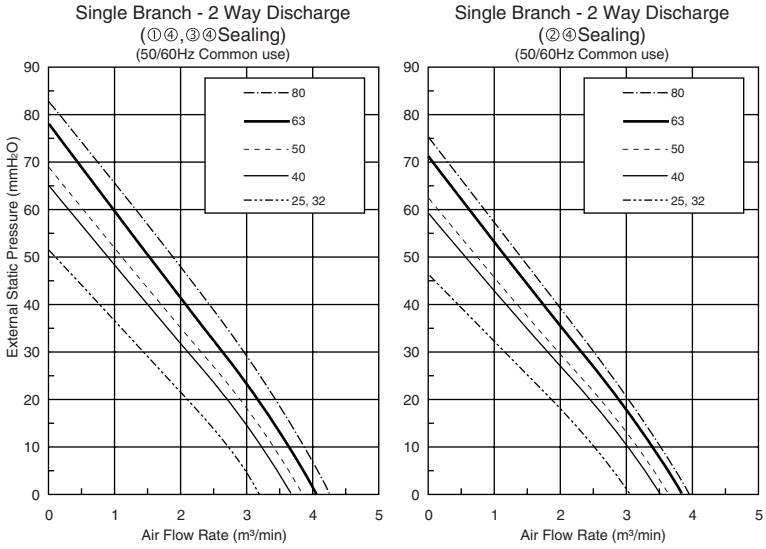

(V0694)

100 · 125

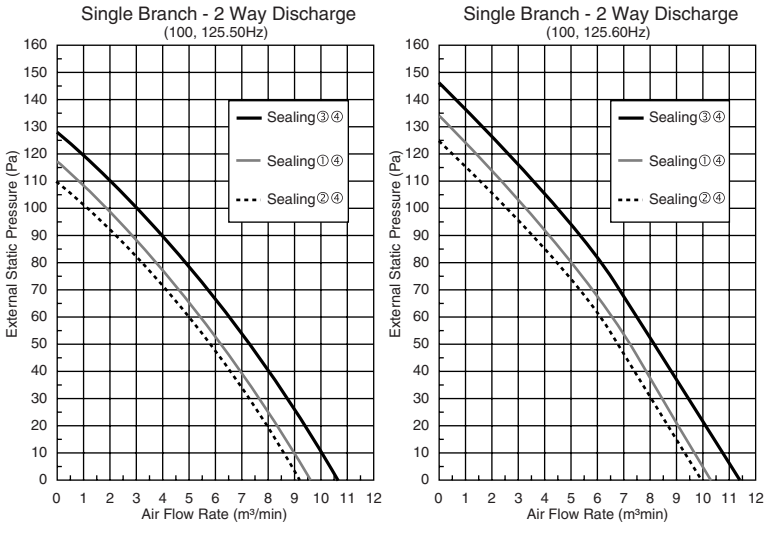

(V0695)

2 Branches — 2 Way Discharge

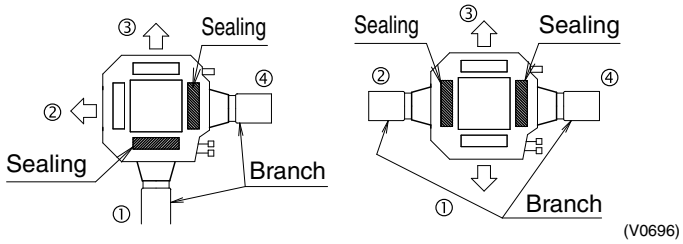

(V0696)

25~80

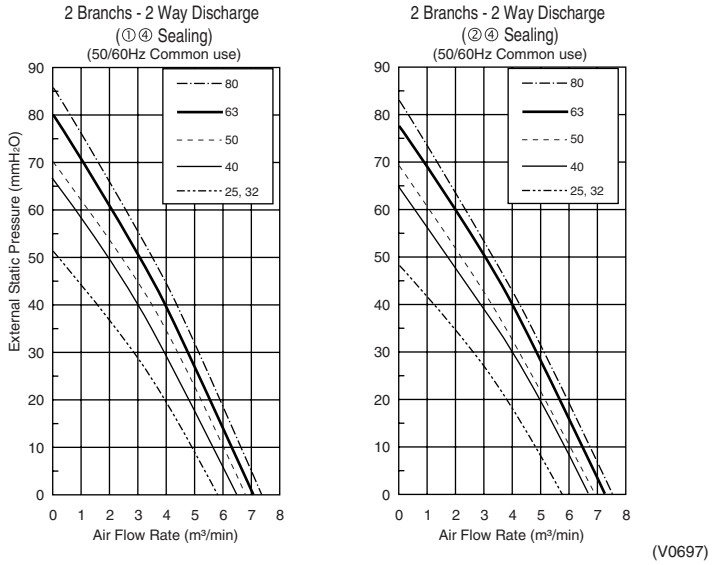

(V0697)

100 · 125

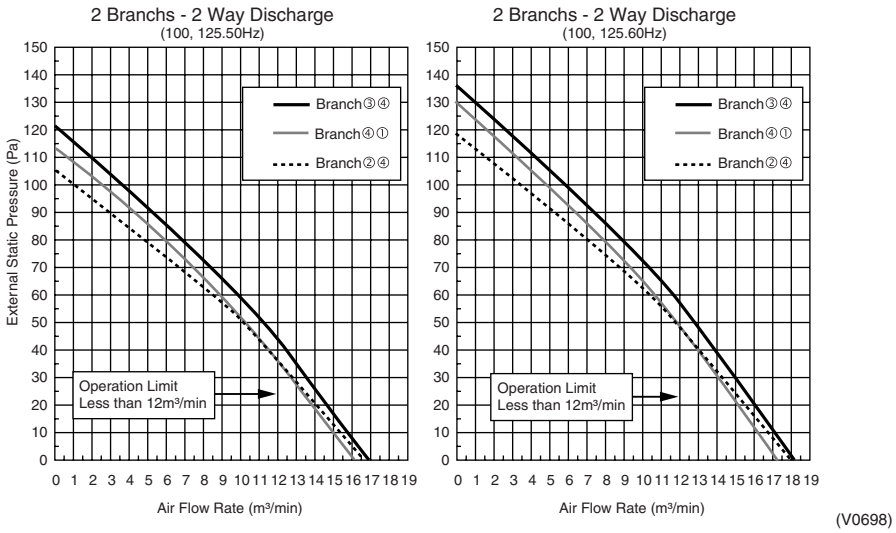

(V0698)

9. Air Velocity and Temperature Distributions (Reference Data)

FXFQ63M

(Heating · Air Velocity Distribution)
Discharge Angle : 65°

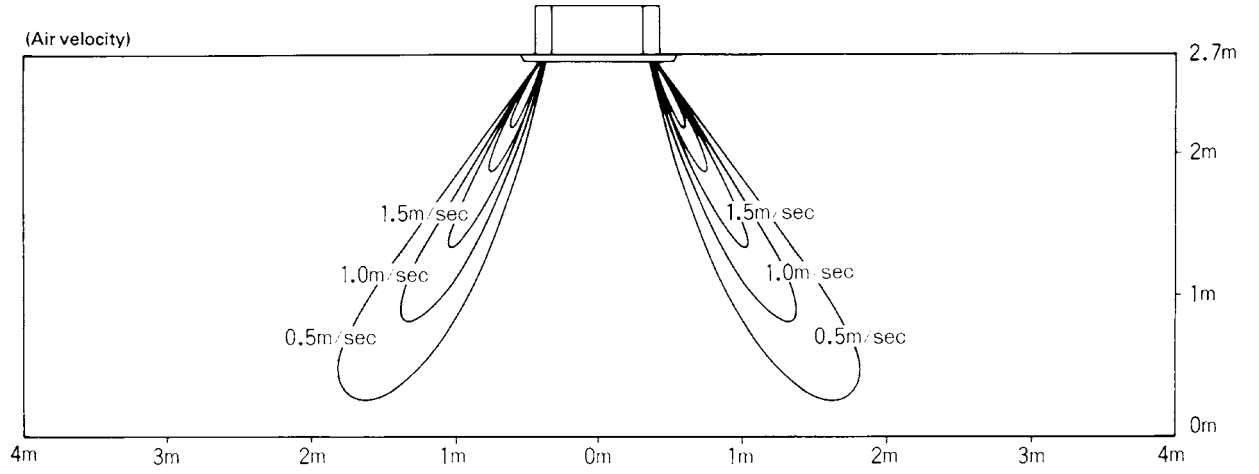

(V0456)

FXFQ63M

(Heating · Temperature Distribution)
Discharge Angle : 65°

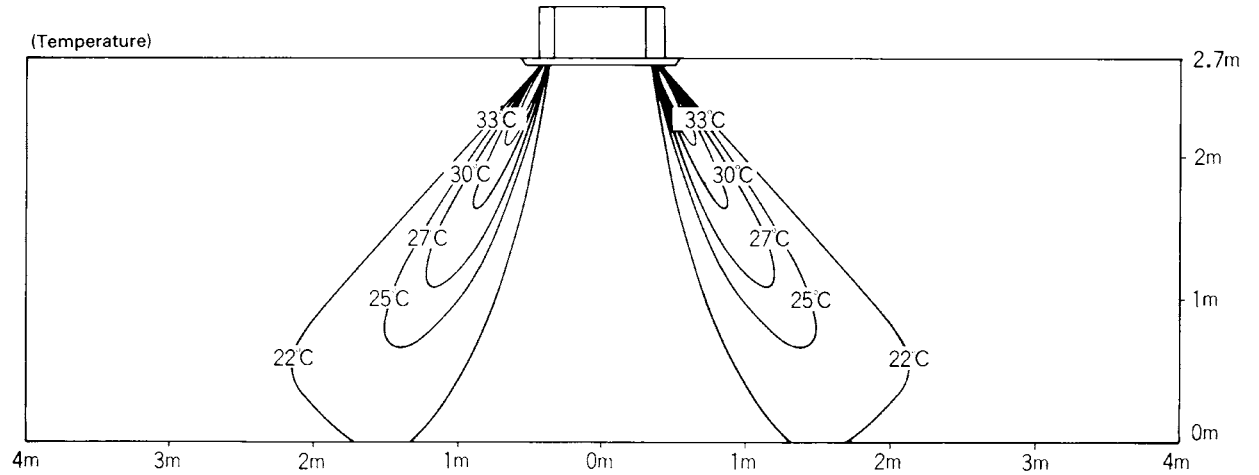

(V0457)

Note:
The standard setup height the Multi flow type is 2.7 m maximum. Shown here is the measurement distribution at the ceiling height of 2.7 m.

FXFQ125M

(Heating · Air Velocity Distribution)
Discharge Angle : 65°

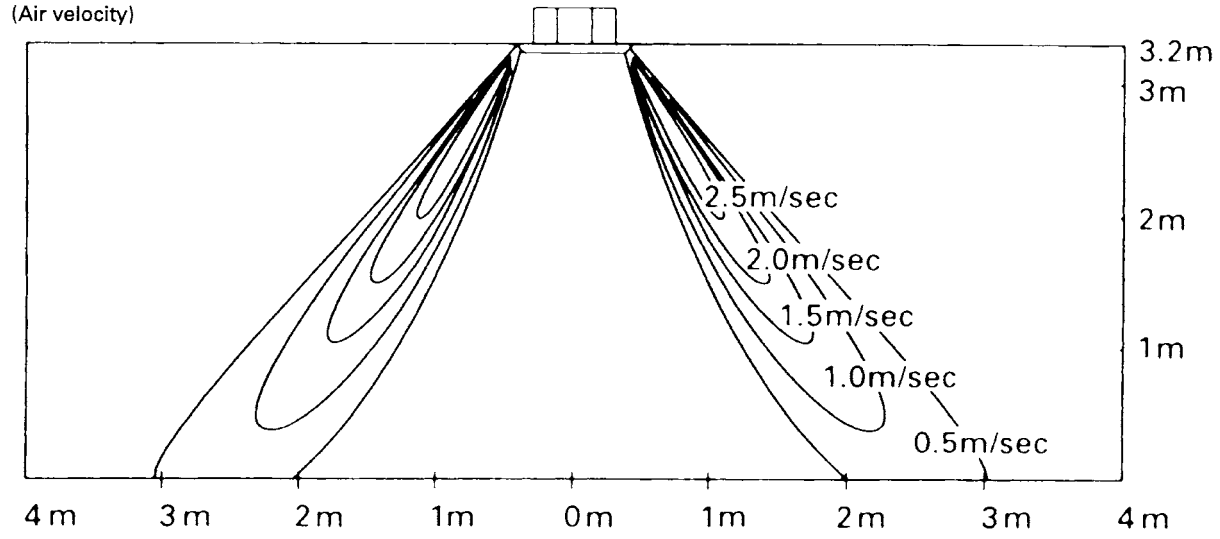

FXFQ125M

(Heating · Temperature Distribution)
Discharge Angle : 65°

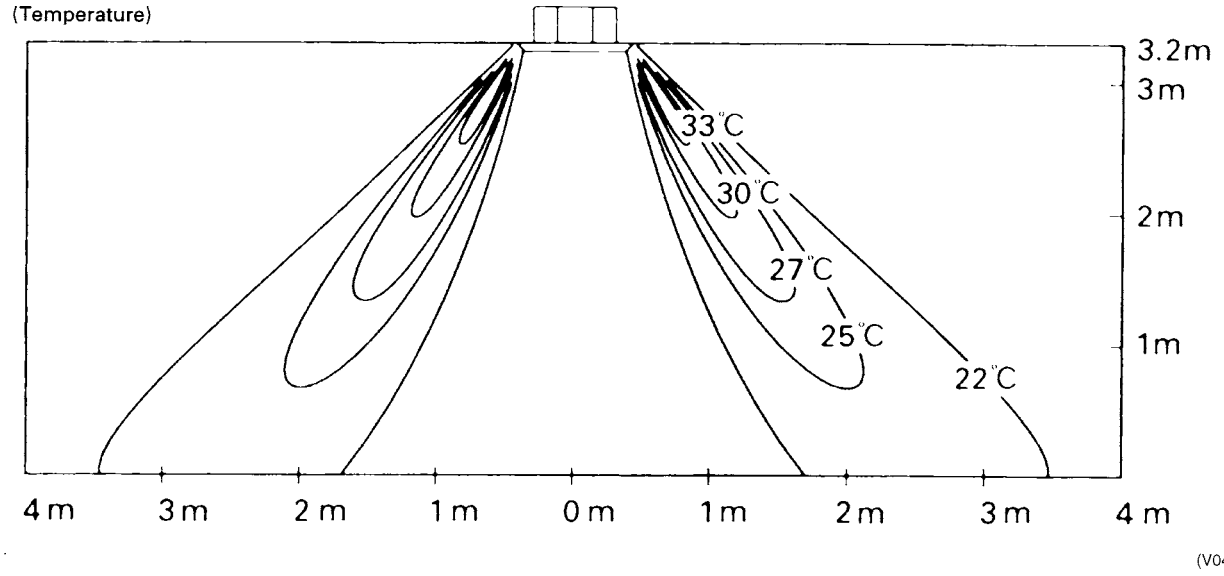

Note:
The standard setup height the Multi flow type is 3.2 m maximum. Shown here is the measurement distribution at the ceiling height of 3 m.

10. Sound Levels

Overall

■ **Ceiling Mounted Cassette Type (Multi-Flow)**

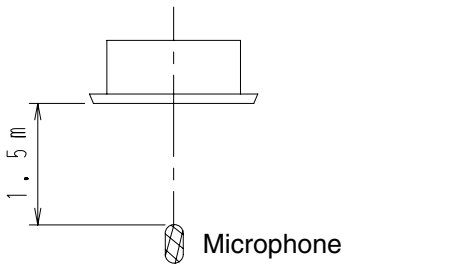

Note:

1. The operating conditions are assumed to be standard (JIS conditions).
2. These operating values were obtained in a dead room (conversion values).
   Sound level will vary depending on a range of factors such as the construction (acoustic absorption coefficient) of the particular room in which the equipments installed.

dBA

Model	220~240V, 50/60Hz	
	H	L
FXFQ25M	30	27
FXFQ32M	30	27
FXFQ40M	31	27
FXFQ50M	32	27
FXFQ63M (C/H)	33/34	28
FXFQ80M	36	31
FXFQ100M	39	33
FXFQ125M (C/H)	42/43	36

Octave Band Level

○———○ 220~240V 50/60Hz

FXFQ25 · 32MVE

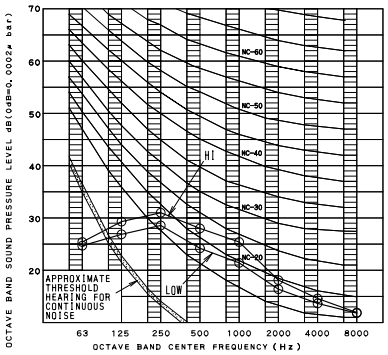

4D034344

FXFQ40MVE

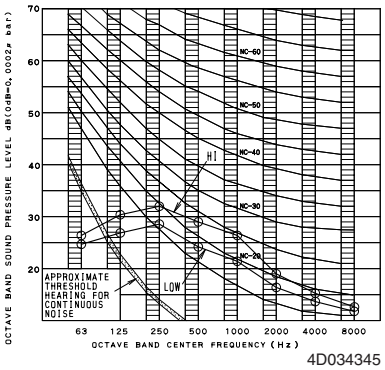

4D034345

FXFQ50MVE

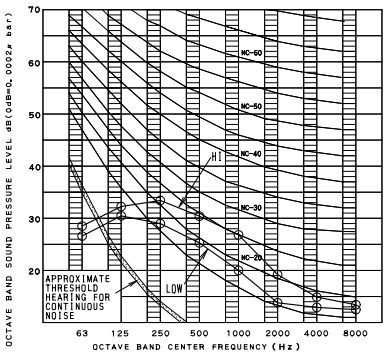

4D034346

FXFQ63MVE

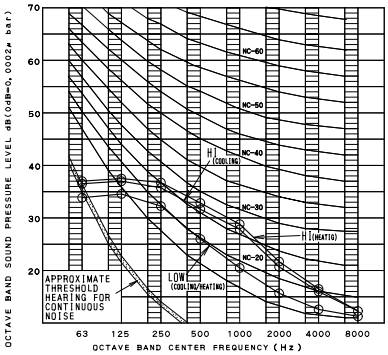

4D034347

FXFQ80MVE

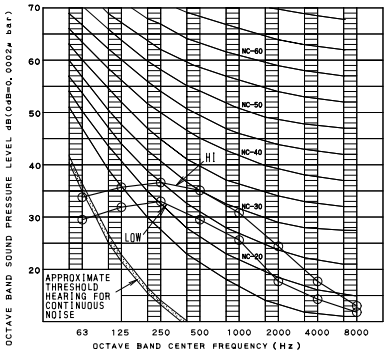

4D034348

FXFQ100MVE

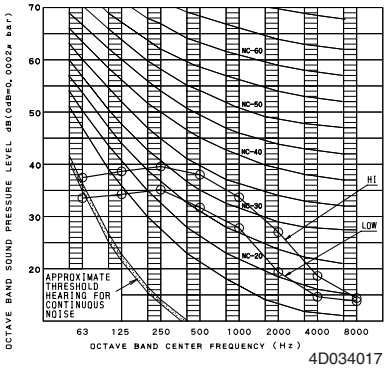

4D034017

FXFQ125MVE

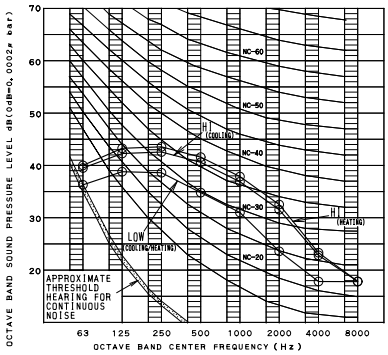

4D034349

11. Installation

Center of Gravity

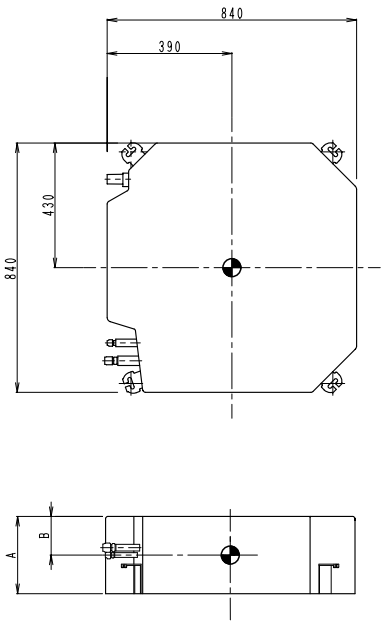

Unit (mm)

MODEL NAME	A	B
FXFQ25~80MVE	246	90
FXFQ100~125MVE	288	120

C : 4D033891B

Service Space for Indoor Units

Unit (mm)

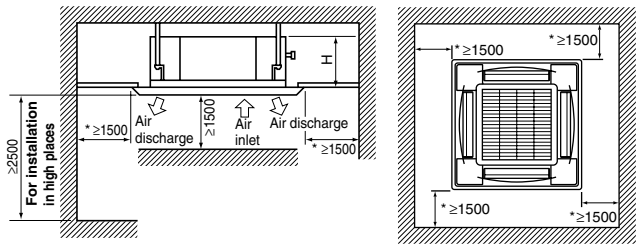

Fig. 1

Fig. 2

NOTE

· Leave 200 mm or more space where marked with the *, on sides where the air outlet is closed.

Model	H
FXFQ25 · 32 · 40 · 50 · 63 · 80MVE	256
FXFQ100 · 125MVE	298

3PA60996-14Y

Note:

Above figure means minimum value. Please these value at least.

Bolt Pitch

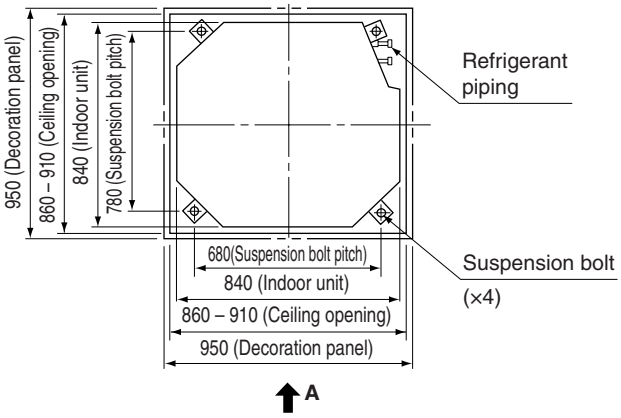

Fig. 3

Unit (mm)

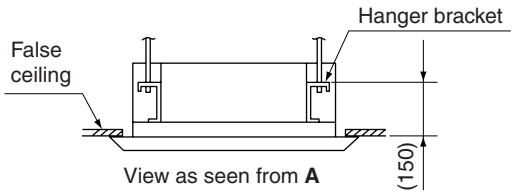

Fig. 4

3PA60996-14Y

Drain Pump Kit

Indoor unit	Drain pump kit
FXFQ-M	Standard (Equipped with indoor unit)

Drain Piping Work

(1) Carry out the drain piping

- Lay pipes so as to ensure that drainage can occur with no problems.
- Employ a pipe with either the same diameter or with the diameter larger (excluding the raising section) than that of the connecting pipe (PVC pipe, nominal diameter 25 mm, outside diameter 32 mm).
- Keep the drain pipe short and sloping downwards at a gradient of at least 1 / 100 to prevent air pockets from forming.
- If the drain hose cannot be sufficiently set on a slope, execute the drain raising piping.
- To keep the drain hose from sagging, space hanging wires every 1 to 1.5 m.

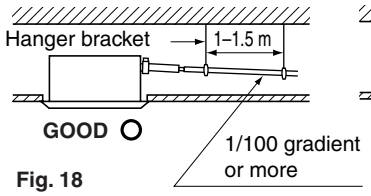

Fig. 18

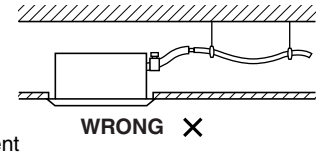

Fig. 19

- Use the drain hose (1) (accessory) and metal clamp (2).
- Insert the drain hose into the drain socket up to the base, and tighten the metal clamp securely within the portion of a white tape of the hose-inserted tip. Tighten the metal clamp until the screw head is less than 4 mm from the hose.
- Wrap the sealing pad (10) (accessory) over the metal clamp and drain hose to insulate.
- Make sure that heat insulation work is executed on the following 2 spots to prevent any possible water leakage due to dew condensation.
  - Indoor drain pipe
  - Drain socket

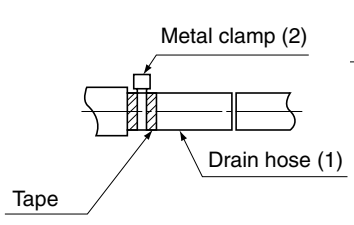

Fig. 20

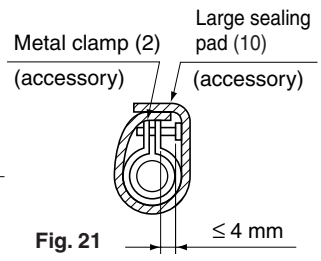

Fig. 21

3PA60996-14Y

<PRECAUTIONS FOR DRAIN RAISING PIPING>

- Install the drain raising pipes at a height of less than 550 mm.
- Install the drain raising pipes at a right angle to the indoor unit and no more than 300 mm from the unit.

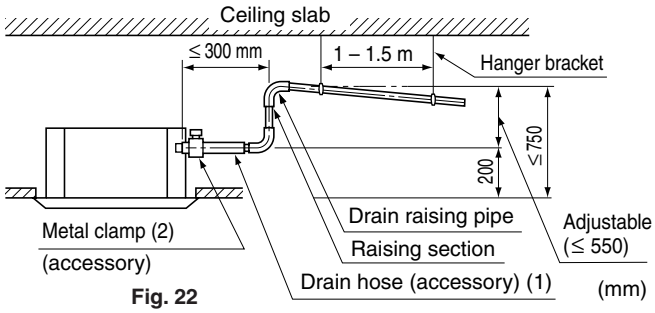

Fig. 22

NOTE

- To ensure no excessive pressure is applied to the included drain hose (1), do not bend or twist when installing. (This may cause leakage.)
- If converging multiple drain pipes, install according to the procedure shown below.

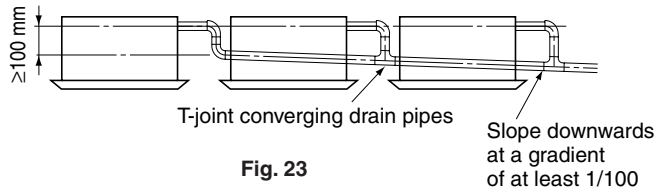

Fig. 23

Select converging drain pipes whose gauge is suitable for the operating capacity of the unit.

(2) After piping work is finished, check if drainage flows smoothly.

- Add approximately 2 liter of water slowly from the air outlet and check drainage flow.

WHEN ELECTRIC WIRING WORK IS FINISHED

- Check drainage flow during COOL running, explained under “TEST OPERATION”.

WHEN ELECTRIC WIRING WORK IS NOT FINISHED

- Remove the terminal box lid connect a power supply and remote controller to the terminals. (Refer to the “HOW TO CONNECT WIRINGS”)
  Be sure to attach the terminal box lid before turning on the power.
  Next, press the inspection / test operation button “ TEST ” on the remote controller. The unit will engage the test operation mode. Press the operation mode selector button “ ” until selecting FAN OPERATION “ ”. Then, press the ON / OFF button “ ”. The indoor unit fan and drain pump will start up. Check that the water has brained from the unit. Press “ TEST ” to go back to the first mode.
- **Note that the fan also starts rotating.**
- Attach the terminal box lid as before.

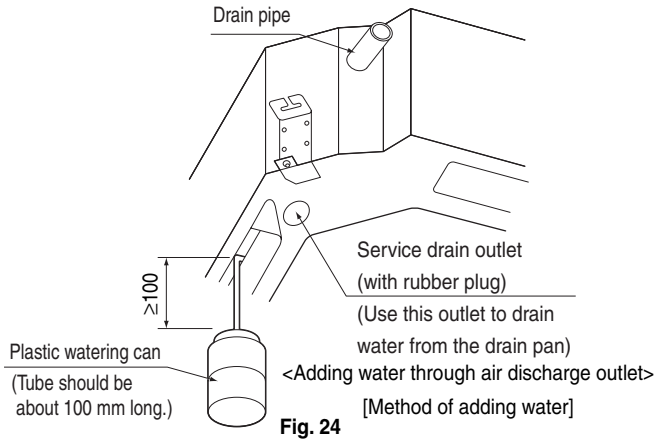

Fig. 24

3PA60996-14Y

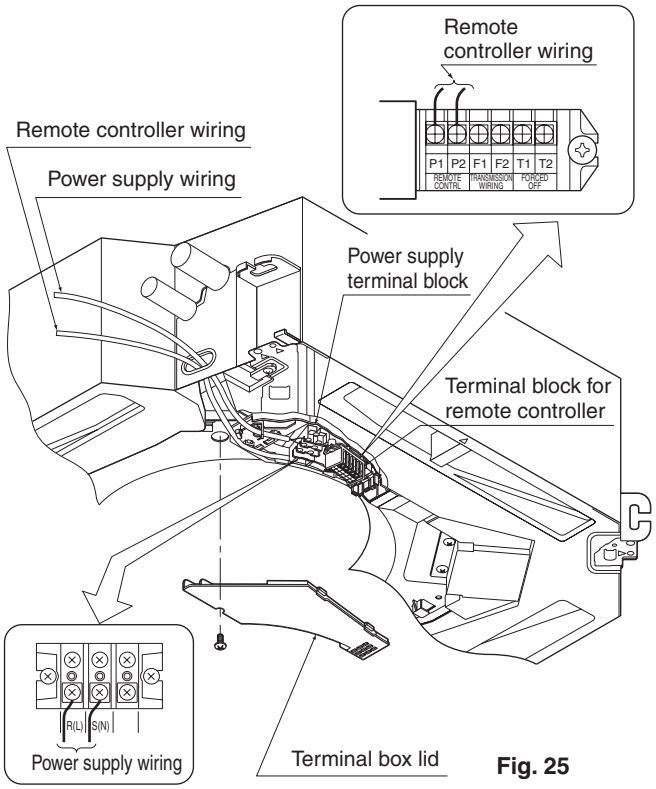

Fig. 25

CAUTION

- Drain piping connections
  Do not connect the drain piping directly to sewage pipes that smell of ammonia. The ammonia in the sewage might enter the indoor unit through the drain pipes and corrode the heat exchanger.
- Keep in mind that it will become the cause of getting drain pipe blocked it water collects on drain pipe.

3PA60996-14Y

12. Accessories

Standard Accessories

FXFQ25~125M

Name	(1) Drain hose	(2) Metal clamp	(3) Washer for hanging bracket	(4) Clamp	(5) Paper pattern for installation	(6) Screws (M5)
Quantity	1 pc.	1 pc.	8 pcs.	8 pcs.	1 pc.	4 pcs.
Shape					Also used as packing material 	For paper pattern for installation 

Name	(7) Washer fixing plate	Insulation for fitting	Sealing pad		
Quantity	4 pcs.	1 each	1 each	1 pc.	
Shape		(8) for gas pipe   (9) for liquid pipe	(10) Large 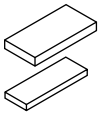 (11) Medium	(12) Small 	(Other) • Installation manual • Operation manual

3PA60996-14Y

Optional Accessories (For Unit)

Item \ Model			FXFQ25MVE	FXFQ32MVE	FXFQ40MVE	FXFQ50MVE	FXFQ63MVE	FXFQ80MVE	FXFQ100MVE	FXFQ125MVE
Decoration panel			BYCP125D-W1							
Sealing member of air discharge outlet			KDBH55D160W							
Panel spacer			KDBP55H160WA							
Filter related	High efficiency filter unit	65%	KAFP556D80						KAFP556D160	
		90%	KAFP557D80						KAFP557D160	
	Replacement high efficiency filter	65%	KAFP552H80						KAFP552H160	
		90%	KAFP553H80						KAFP553H160	
	Filter chamber		KDDFP55D160							
	Long life replacement filter	Non-woven type	KAFJ551C160							
	Ultra long-life filter		KAFP55D160							
	Replacement ultra long-life filter		KAFJ55K160H							
Fresh air intake kit	Chamber type	Without T shape pipe and fan	KDDP55D160							
		With T shape pipe without fan	KDDP55D160K							
	Direct installation type		KDDJ55X160							
Branch duct chamber			KDP55D80						KDP55D160	
Chamber connection kit			KKSJ55K160							
Insulation kit for high humidity			KDT-55D80						KDT-55D160	

3D034258B

Optional Accessories (For Controls) : Refer to P.375

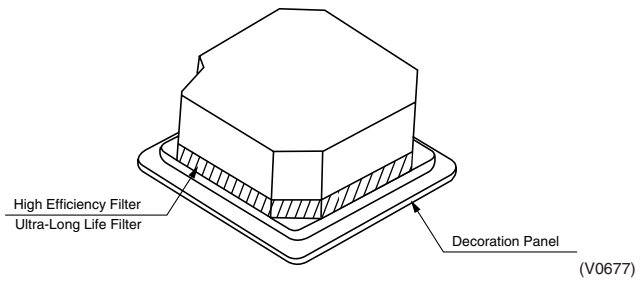

(V0677)

BYCP125D-W1 – Decoration Panel

1. BEFORE INSTALLATION

1. PRECAUTIONS

- Refer also to the installation manual attached to the indoor unit.

2. ACCESSORIES

- Installation manual.

3. NOTE TO INSTALLER

- Be sure to instruct the customer how to properly operate the system showing him/her the attached operation manual.

2. PREPARATION OF DECORATION PANEL

<<For this unit, you are able to select air flow directions. To discharge air in 2 or 3 directions, it is necessary to purchase optional blocking pad kit.>>

HANDLING OF DECORATION PANELS

- Never place the panel facing down nor lean it against a wall nor leave it on a projecting object.
- Never touch or put pressure on the swing flap.
  (The swing flap may malfunction.)

(1) Remove the swing flap motor lead wire on the back of the decoration panel form the hook.
Push the wires outward to the frame surface and remove the wires from the hook in the middle.
(Refer to Fig. 1)

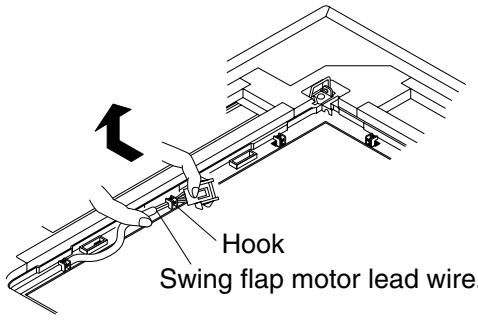

Fig. 1

(2) Remove the suction grille from the decoration panel.

1 Push the suction grille lever inward and lift up the lever side. **(Refer to Fig. 2)**

2 Detach the suction grille from the decoration panel by lifting the grille up approximately 45 degrees. **(Refer to Fig. 3)**

(3) Remove the service cover on the corner.

- Slide the service cover outward to remove. **(Refer to Fig. 4)**

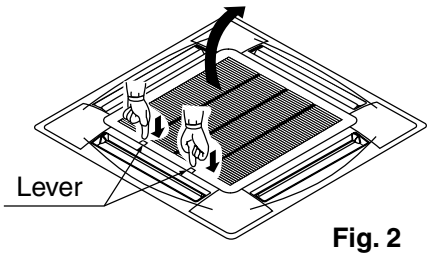

Fig. 2

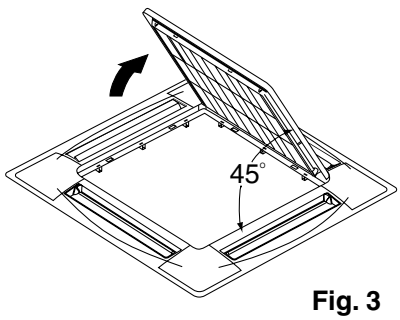

Fig. 3

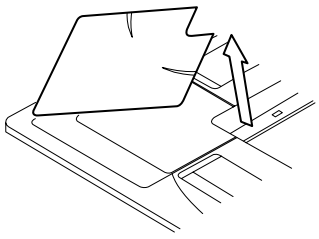

Fig. 4

3PA64319-11M

3. INSTALLATION OF THE DECORATION PANEL TO THE INDOOR UNIT BODY

<<Refer to the installation manual attached to the indoor unit for the installation of the indoor unit.>>

(1) Match the “PIPING SIDE” and “DRAIN SIDE” displays on the decoration panel with the position of the piping section and drain section on the indoor unit.

(2) Install the decoration panel.

1 Temporarily install the decoration panel to the indoor unit by hanging the latch on the opposite side of the swing flap motor of the decoration panel to the hook of the indoor unit body. (2 positions)

2 Temporarily hang the remaining 2 latches to the hooks on the sides of the indoor unit.
(Be careful not to let the swing motor lead wire get caught in the sealing material.)

3 Screw all 4 hexagon head screws located right beneath the latches in approximately 5 mm.
(Panel will rise.)

4 Adjust the decoration panel by turning it to the arrowed direction in Fig. 5 so that the ceiling opening is completely covered.

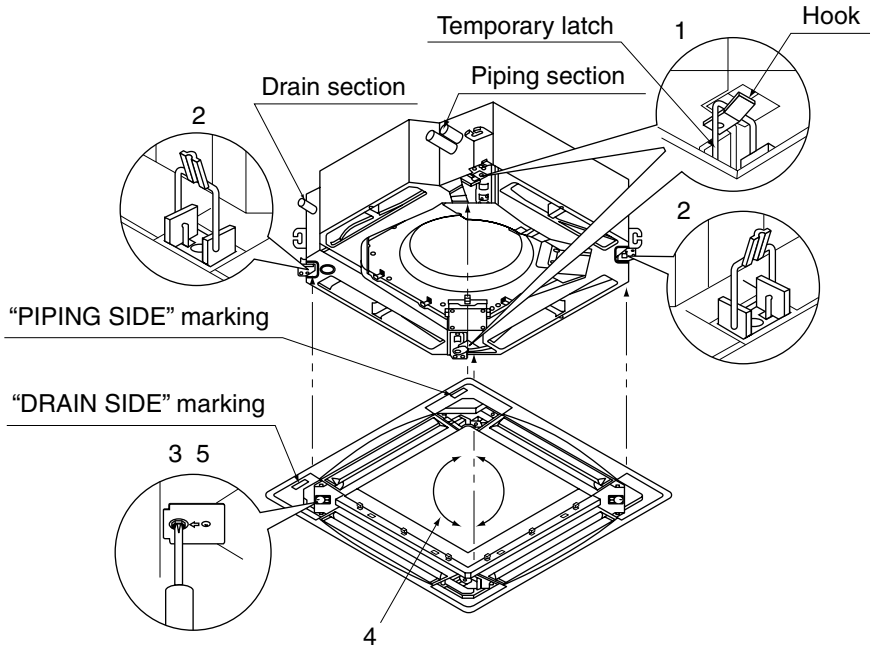

Fig. 5

3PA64319-11M

5 Tighten the screws until the thickness of the sealing material between the decoration panel and the indoor unit body reduces to 5-8 mm.

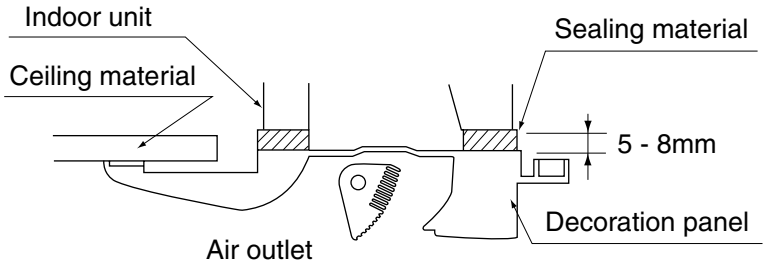

[PRECAUTIONS]

- Inproper screwing of the screws may cause the troubles shown in Fig. 6 Screw properly.

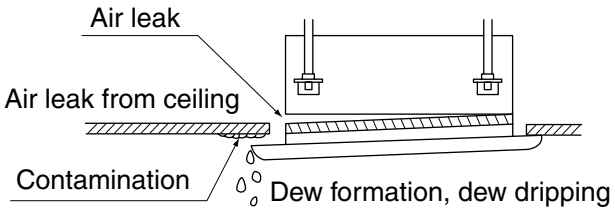

Fig. 6

- If gap is still left between the ceiling and the decoration panel after screwing the screws, readjust the indoor unit body height. **(Refer to Fig. 7)**

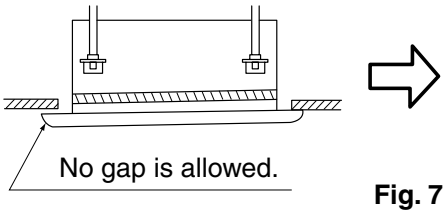

Fig. 7

Adjustment of the indoor unit body height from the holes in the corner of the decoration panel is possible if the indoor unit is kept leveled and the drain piping, etc. is unaffected.

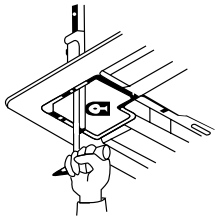

3PA64319-11M

(3) Wiring of the decoration panel **(Refer to Fig. 8)**

6 Remove the terminal box lid.

7 Connect the connectors for swing flap motor lead wire installed on the decoration panel.

8 Replace the terminal box lid reversing the procedure to remove it.

Make sure that the swing flap motor lead wire is not caught between the indoor unit and the decoration panel.

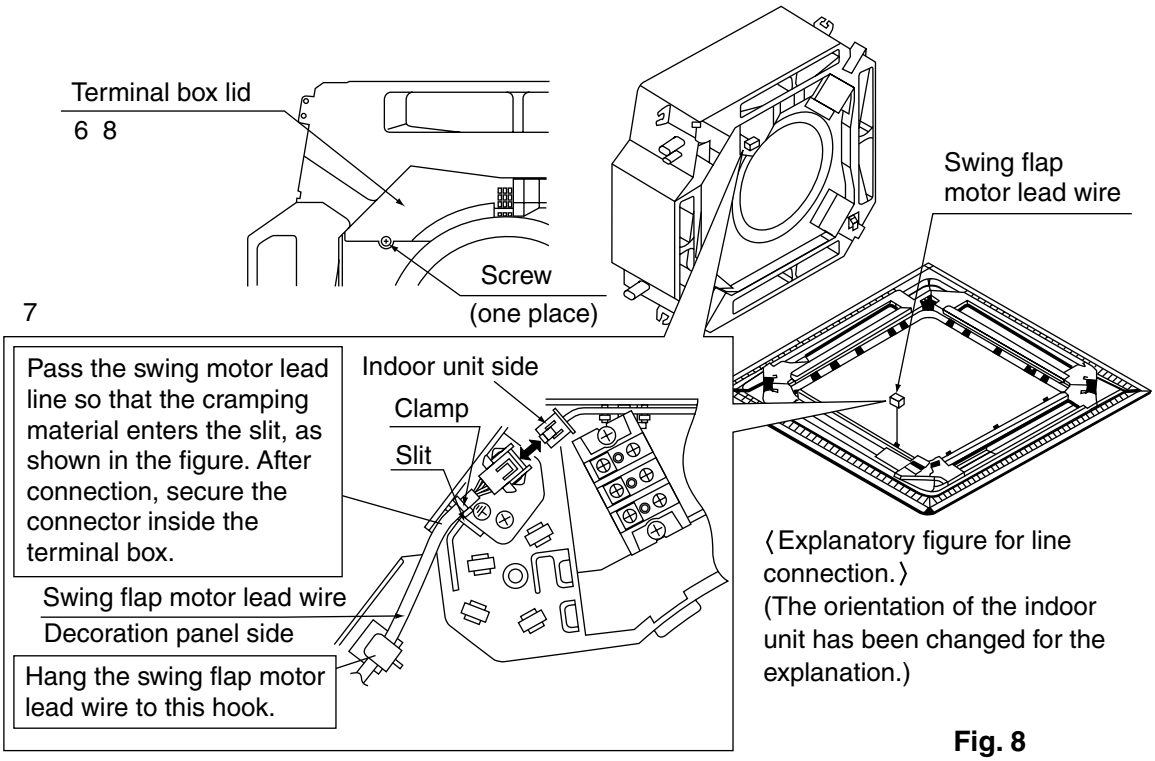

Fig. 8

4. INSTALLATION OF SUCTION GRILLE AND SERVICE COVER

(1) Install the suction grille.
Install by reversing the procedure shown in “PREPARATION OF DECORATION PANEL”.
It is possible to install the suction grille in 4 directions by turning the suction grille.
Change the direction when adjusting the direction of the suction grille of multiple units or in meeting customers’ demands.

NOTE
Be careful not to get swing flap motor lead wire get caught when installing the suction grille.

(2) Install the service cover on the corner.

1 Attach the string of the service cover to the pin of the decoration panel. **(Refer to Fig. 9)**

2 Install the service cover over the decoration panel. **(Refer to Fig. 10)**

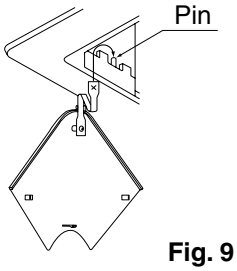

Fig. 9

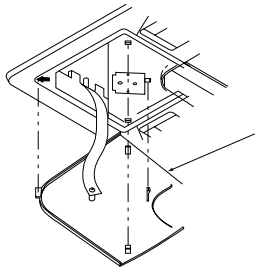

Fig. 10

3PA64319-11M

KDBH55D160W – Sealing Member of Air Discharge Outlet

Caution

- Refer to the installation manual for both indoor unit and the decoration panel.
- When you install other optional kit , it may not be possible to select the 3-way or 2-way air discharge. (followed table)
  For details , refer to the manual for the optional kit or the catalogue.

Optional kit	4-way air discharge	3-way air discharge	2-way air discharge
Branch duct chamber	○	○	○
High efficiency filter chamber	○	× Not possible to install	× Not possible to install

Contents of Kit

Prior to installation make sure you have the complete of parts.

Name	Sealing Material	Tape for fixing the Sealing Material	Insulation for Side Plate	Moisture Absorber for Bell-Mouth	Moisture Absorber for Swing flap	Spacer	Spacer installation screw
Quantity	2 pieces	2 pieces	2 pieces	1 pieces	3 pieces	1 pieces	1 pieces
Shape・marking	①	②	③ 100mm×1480mm	④ 55mm×1055mm	⑤	⑥	⑦ (M3x10)

❶ The direction of air discharge and the positioning of sealing material

(1) Selection of the air outlet
- Select the direction of air discharge from the following table according to the location of the indoor unit.
  Refer to ❷ **Setting of indoor unit** Setting of indoor unit for setting position number.
  Refer to the installation manual attached to the indoor unit for selection of installation location.

Caution Never select the direction of air discharge other than the following pattern.
(You may have a condensation problem.)

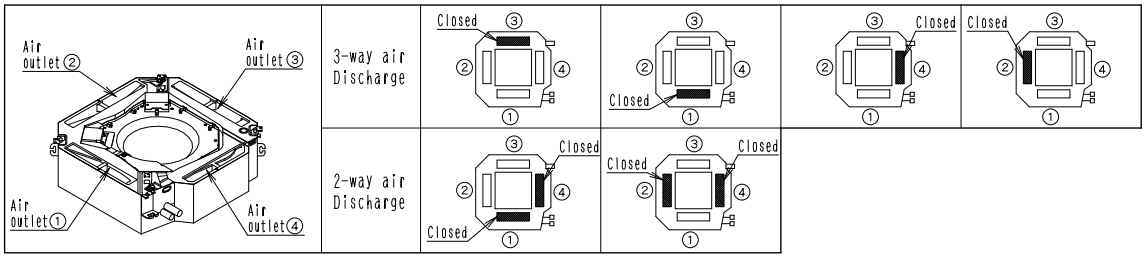

(2) Prepare the sealing material and the tape for fixing the sealing material according to the air outlet No. to be closed.
- Cut off the sealing material and the tape along the perforated lines (marked – – –).
- Adhere the sealing material to tape. (Make sure that the sealing material is placed at the center of the tape.)

Example) For closing the air outlet ①
〈How to prepare the sealing material〉

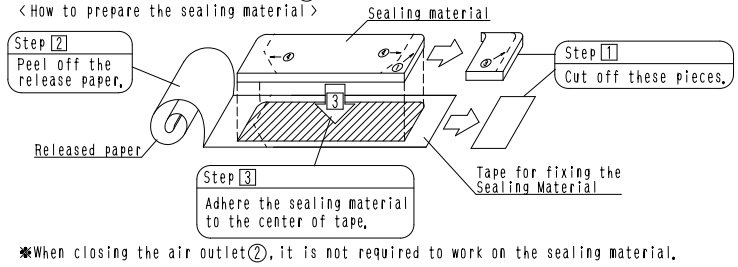

※When closing the air outlet②, it is not required to work on the sealing material.

(3) Adhere the sealing material prepared according to the procedure (2) to the indoor unit air outlet.

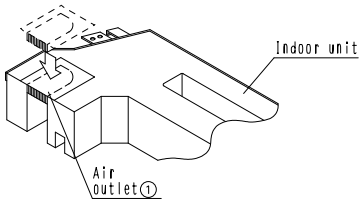

〈Installation for air outlet〉

Caution

The sealing material has directional characteristics.
Make sure to adhere the sealing material fixing tape in the direction which the parts from ① to ④ can be seen as shown above.

1P088448A

❷ Setting for indoor unit

It is required to make a field setting from the remote controller according to how the indoor units are installed.
The direction of air discharge must also be set by the remote controller.

- The 3 different kinds of setting such as "Mode number", "The setting switch number" and "The setting position number" must be made by the remote controller.
- Refer to the item of "Field setting" in the operation manual of the remote controller for the setting procedure.

(1) Setting according to number of use of the air discharge.
Check the setting position number corresponding to the direction of air discharge in a right table.

(Content of setting)

(Number of use of air outlets)	Mode number	The setting switch number	The setting position number
3-way air discharge	13(23)	1	02
2-way air discharge			03

Note) Refer to the table for height of the ceiling for each direction of air outlet. (The setting of the ceiling height is also required.)

(2) Setting according to height of ceiling.
As for the ceiling height, see the left table below which shows the standard of ceiling height and number of air outlets to be used.
Then, taking this standard into account, make a field setting of ceiling height from the remote controller according to the right table below.

(Standards of ceiling height and number of air outlets)

Indoor unit (FHYCP, FXF)		Number of use of air outlets					
		25~80 type			100~140 type		
		4-way air discharge	3-way air discharge	2-way air discharge	4-way air discharge	3-way air discharge	2-way air discharge
Ceiling height (m)	Standard	~2.7	~3.0	~3.5	~3.2	~3.6	~4.2
	Semi-high	2.7~3.0	3.0~3.3	3.5~3.8	3.2~3.6	3.6~4.0	~4.2
	High	3.0~3.5	3.3~3.5	——	3.6~4.2	4.0~4.2	——

(Content of setting)

		Mode number	The setting switch number	The setting position number
Ceiling height (m)	Standard	13(23)	1	01
	Semi-high			02
	High			03

(Ceiling height is reference value)

❸ Installation of the insulation

Please turn off the power supply for safety absolutely, before you do installation of the decoration panel and affixation of insulation and connected work of swing conector.

(1) Adhere the insulations for side plate ③ in position, referring (Fig. 1).
(2) Adhere the moisture absorber for bell-mouth ④ on the inner surface of the bell-mouth. See (Fig. 1) (Fig. 2).
(3) Adhere the moisture absorber for swing flap aligning with the upper edge of the swing flap on the air outlet. See (Fig. 3).

Fig. 1

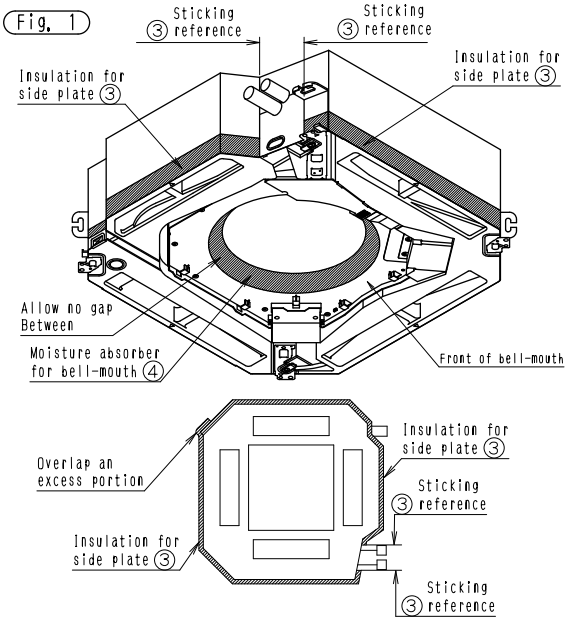

Fig. 2

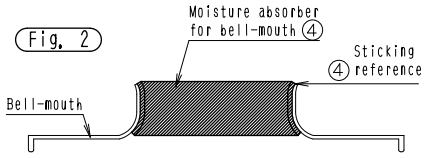

Section of the bell-mouth

Fig. 3

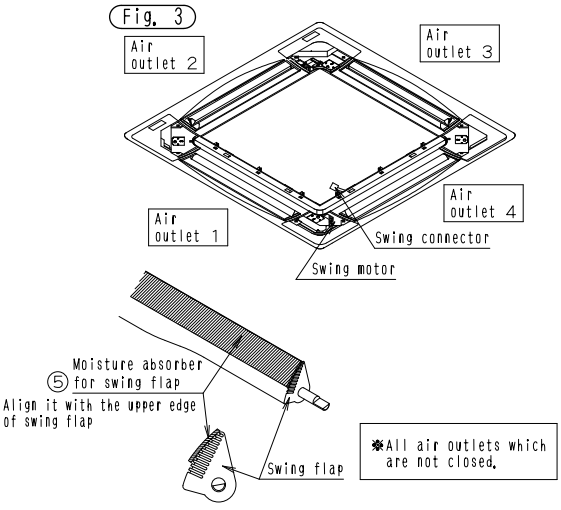

❹ Installation of the spacer

Please install spacer ⑥ on the swing motor with the spacer installation screw ⑦.

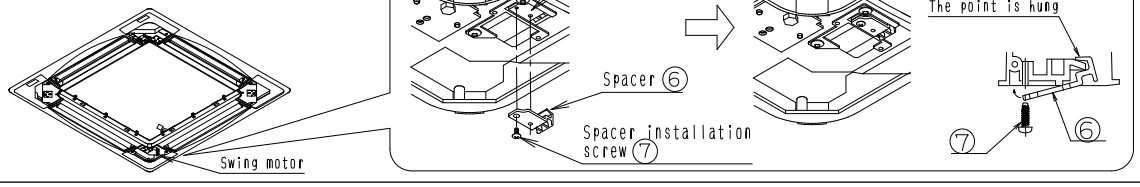

1P088448A

KDBP55H160WA – Panel Spacer

Combination table

Panel spacer	KDBP55H160FA	KDBP55H160WA KDB55K160WA
Decoration panel	BYCP125K-W1	BYCP125D-W1 BYC125K-W1 BYC125KJW1

Caution

- When the Panel Spacer is installed, it is not possible to have 2-way air outlet.
- Refer to the installation manual for both indoor unit and the Panel spacer for its installation.

Contents of kit

Check if following parts are included with your kit.

Name	Panel spacer frame	Resin corner part	Fixing metal	Screw
Quantity	4 PCS.	4 PCS.	4 PCS.	28 PCS.
Shape・number	① 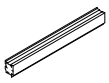	② 	③ 	④  M4×10 Tapping screw (Class 2)

Name	Sealing material		Caution label	Others
Quantity	2 PCS.	2 PCS.	1 PC.	
Shape・number	⑤ 	⑥ 	⑦ 	・This Installation Manual

❶ Preparation of the Decoration panel

- Handle the decoration panel with care.

Never place the panel face down, or lean the panel against wall or place on the projective object.
(It causes the dent or damage of the surface of the panel or damage of swing motor.)

(1) Remove the suction grill from the decoration panel.
(Refer to the installtion manual of the decoration panel how to remove.)

(2) Place the panel face down on the corrugated board or the vinyl sheet to protect the surface of the panel.

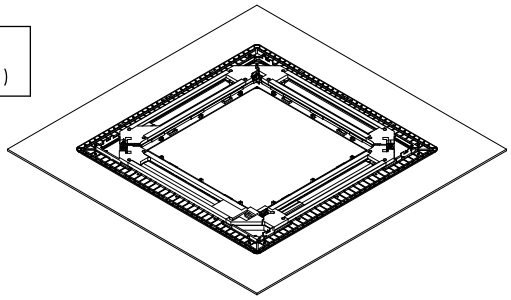

❷ Installation of the indoor unit

Adjust the height of the indoor unit.

Be sure the piping will not contact with the ceiling joist etc. after adjusting the height.

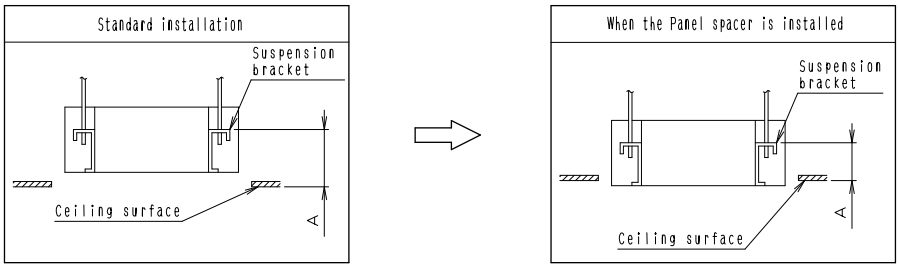

Decoration panel	A(mm)
BYCP125D-W1 BYC125K-W1 BYC125KJW1	145~150
BYCP125K-W1	125~130

Decoration panel	A(mm)
BYCP125D-W1 BYC125K-W1 BYC125KJW1	105~110
BYCP125K-W1	85~90

1P136564E

❸ Assembly of panel spacer

(1) Assemble the panel spacer frame ① and the plastic corner joint ② temporarily.

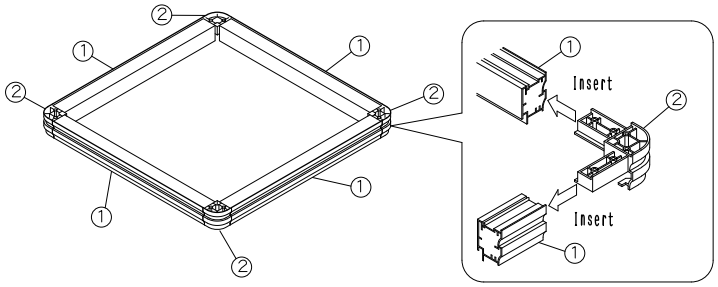

(2) Fix with the screws ④ from the top. (4 screws in each corner)

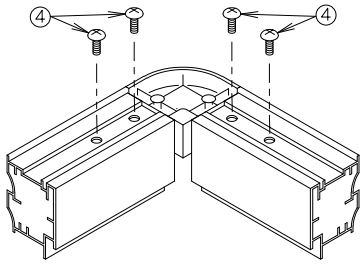

❹ Fixing to the Decoration panel

(1) Set the fixing metal ③ on each corner with screws ④.
(Screw positions change with decoration panels, as shown in the following figure.)

● In the case of BYCP125K-W1

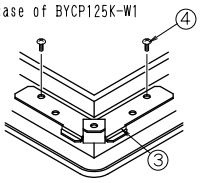

● In the cases of other than the above.

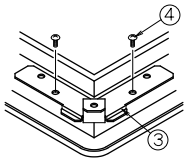

(2) Place the panel spacer assembled in item ③ Assembly of panel spacer of the above on the outer frame of the Decoration panel.

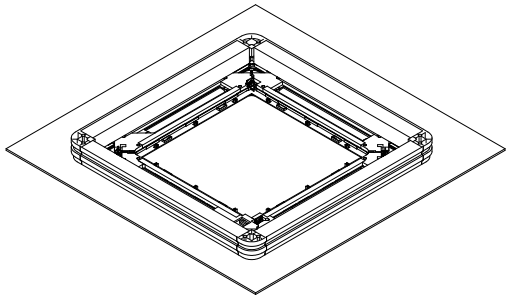

(3) Fix the panel spacer to the fixing metal ③ with screws ④ (4 portions).

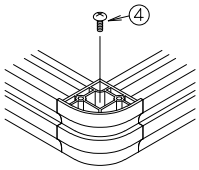

❺ Adhesion of the sealing material

Adhere the sealing material ⑤ ⑥ on the upper face of the panel spacer in the order of ⑤ and ⑥.

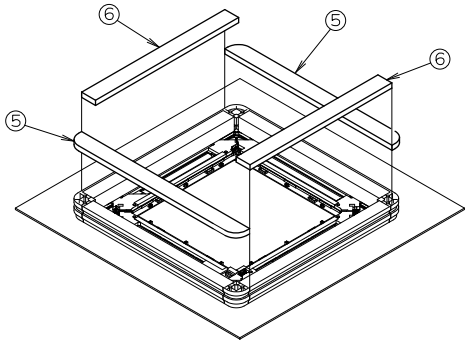

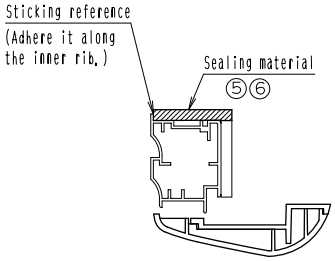

❻ Installation of the Decoration panel

(1) install the decoration panel to the indoor unit according to the installation manual of decoration panel.

The panel spacer is not firmly fixed to the decoration panel, so that never hold the panel spacer directly or lean the decoration panel extremely.

(2) After installation of the Decoration panel, adhere the caution sticker ⑦ next to the name plate of the indoor unit as shown on the right.

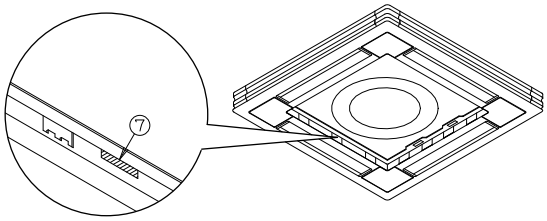

1P136564E

KDDP55D160(K) – Fresh Air Intake Kit

⚠Caution Before starting the installation work, carefully read the following safety precautions and observe them to ensure safety during work.

- Make sure to use the attached or spcified components to install the prducts. Otherwise, it may cause air leak or the product may fall.
- After installation, check whether there is no abnormality during the trial operation.

REMARKS

- This kit can be installed to the Ceiling Mounted Cassette Type Air Conditioner<Multi-flow type>.
- Before installation, make sure the indoor unit number.
- Refer to the installation manuals for the indoor unit and the decoration panel.

Combination table

Kit name	Indoor unit model that party crowded is possible	
KDDP55D160 KDD55DA160 KDDP55D160K KDD55DA160K	SPLIT	FHYCP50·60·71·100·125DVE FHYCP71·100·125·140DVL
	VRV	FXF25·32·40·50·63·80·100·125LVE FXF25·32·40·50·63·80·100·125LVEC FXFQ25·32·40·50·63·80·100·125MVE

Components Check if the following parts are included with your kit.
Shaded part ▨ is separately packed.

Name	①Suction Chamber	②Connecting Chamber (Right)	③Connecting Chamber (Left)	④Screw	⑤Closing Material	⑥T Joint	⑦Flexible Duct	⑧Clamp	⑨Installation Manual
Shape	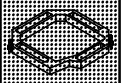			 M4×12					
Q'ty KDDP55D160 KDD55DA160	1 PC.	1 PC.	1 PC.	4 PCS.	1 PC.	—	—	—	1 PC.
Q'ty KDDP55D160K KDD55DA160K	1 PC.	1 PC.	1 PC.	4 PCS.	—	1 PC.	2 PCS.	4 PCS.	1 PC.

❶ Selection of Location and Access Door

1. Referto the following table.

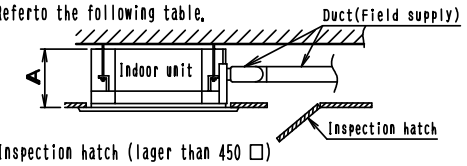

2. Inspection hatch (lager than 450 □)

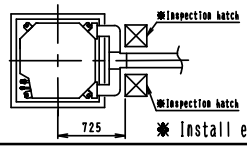

Indoor unit	A
25~80	306
100~140	348

※ Install either one of hatches

In case of KDDP55D160

- When the intake from both sides can not be obtained due to an obstacle, one side intake is acceptable. In this case, make sure to close the opening with the closing material⑤.
- In case of one side intake, the noise will be larger than intake from both sides.

〔Example of one side intake〕

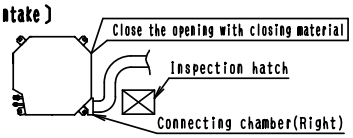

※When installing the wireless receiver kit on the indoor unit, the duct must be led from right side as shwn. In this case, use KDDP55D160 or KDD55DA160.

❷ Installation of the Suction chamber

1. Remove the decoration panel. (This is not required for the new installtion)
   - Remove the decoration panel in the reverse step when the panel is installed. (Refer to the installation manual of the decoration panel for the detais.)
2. Temporarily install the suction chamber to the indoor unit by hanging the lutch on the opposite side of the suction chamber to the hook of the indoor unit body. (2 portions)
   Temporarily hang the remaining 2 hooks of the suction chamber to the hooks on the sides of the indoor unit. (fig.1) ~ (fig.3)
   (When the indoor unit is already installed, hang the hook to the suspennsion bracket temporarily and fix the hook.)
   ※Installation set outline of the indoor unit (fig.2)
3. Tighten 2hexahead screws located beneath the lutches until the thickness of the sealing material of chamber reduces to 5~8mm. (fig.4) (fig.5)

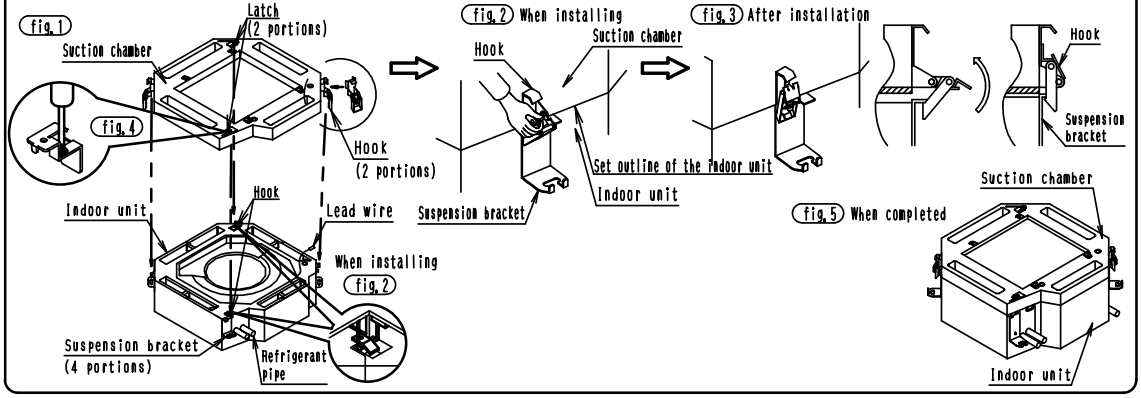

3K011144A

❸ Installation of the Indoor Unit and the Suction Chamber

- Install the indoor unit and the suction chamber.
  Refer to the installation manual of the indoor unit.
  (For the height of the unit, refer to the drawing on the right.)
- Be complete installated refrigerant piping, and drain piping.
- Attach the paper pattern for installation to the indoor unit with screws to protect the indoor unit from dirt. [See below]
  (When the indoor unit is newly installed)
  (See below)
- In case of attaching the chamber after installed indoor unit.
  For the height of the unit, change the height shown on the right drawing.

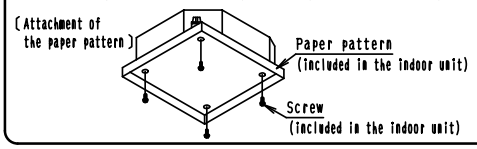

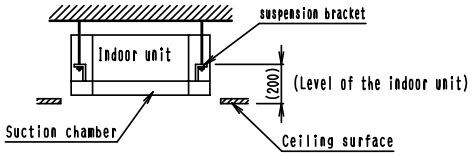

❹ Installation of Connecting duct

1. Install the Connecting chamber(right & left)in accordance with the procedure shown in fig.5 .

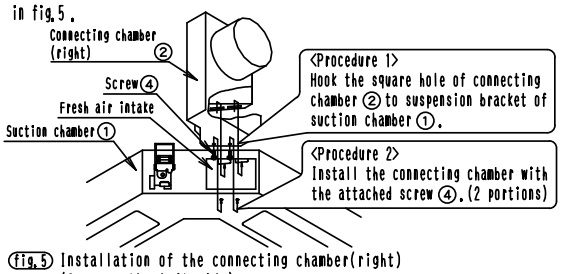

fig.5 Installation of the connecting chamber(right)
(Same as the left side)

<How to tighten the clamp>

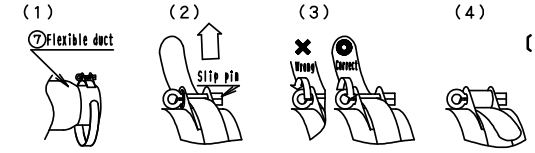

Caution
Do not turn the slit pin reversely.
If turned reversely, ratchet part many break down.

In case of KDDP55D160K

2. Connect the T Joint and Connecting chamber. fig.6

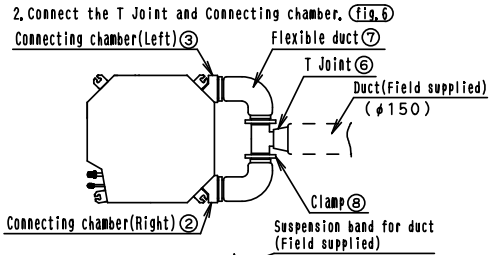

fig.6

(Installation of closing material in case of one side intake)(for KDDP55D160 or KDD55DA160)

- Install the closing material in accordance with the following procedures. fig.7
  Closing material can be used either right or left side opening.

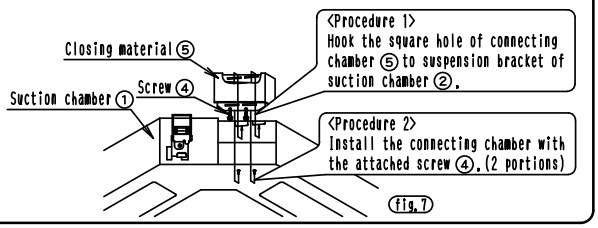

fig.7

❺ Duct connection ‹Duct:diameter φ150›

1) Attach the duct to the outside of the Branch duct chamber.
   - Wrap the duct tape(Field supplied)around the connection to prenent air leak.
   - Insulate the duct to prevent condensate.
2) Do not perform the following duct work.

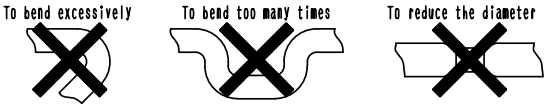

Caution
- follow the local code or regulation to install the duct.
- In case that metal duct is penetrated through wooden wall, make sure the duct and the wall are electrically insulated.
- Install the outdoor unit duct inclined downwardly so that the rain will not get into the duct. (Inclination 1/100 to 1/50)
- Where it contact the outside air, make sure to install screen to avoid birds, small animals or insects getting inside the duct.
- Where it contact the outside air, make sure to install air filter to protect heat exchanger for indoor unit.

❻ Installation of Decoration panel

- Install the Decoration panel in accordance with the installation manual attached to the decoration panel.

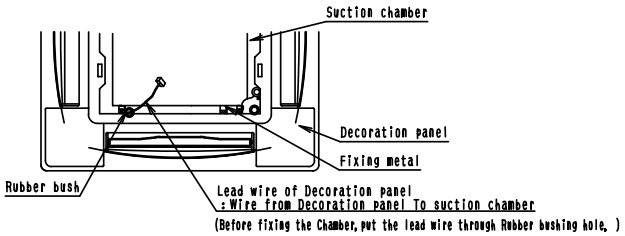

In case of the panel for Wireless remote controller

- Put the Connector for receiver lead wire through rubber bush and connect to the indoor PC board.
- Refer to the installation manual attached to the Wireless remote controller kit(optional)for the detail.

3K011144A

• KDDP55D160(Without T Joint, Duct Fan)

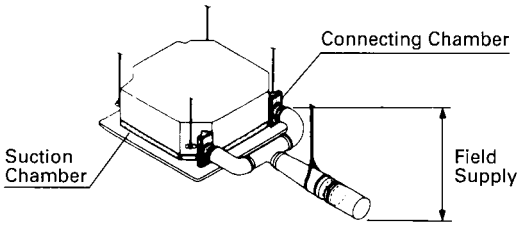

Note:
1. As the principle, the duct fan is unnecessary for 4 meters or less. When needing enough fresh air taking-in, use Kit with Duct Fan of optional, which is shown in the following.
2. The other part of Fresh air intake kit (Duct, T Joint, Air Filter, Hood, etc) is field supplied.
3. In wireless remote controller use, Flexible Duct in the right can not connect.

• Example of Installation

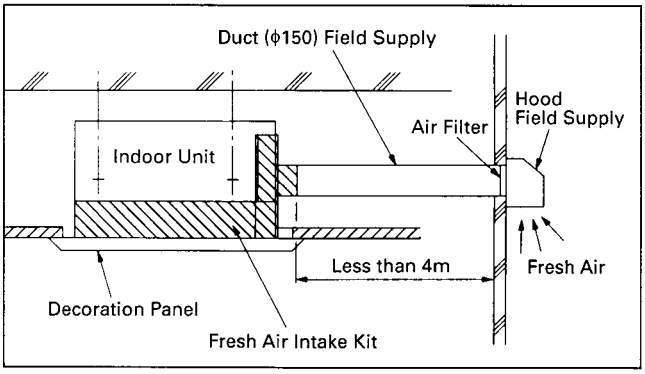

• Specifications

Item \ Kit Name	KDDP55D160
Method of Fresh Air Intake	Fresh Air Intake by The Indoor Unit Fan
Size of Connecting Duct	ϕ150
Applicable Models	For Indoor Unit

• KDDP55D160K(Attached T Joint, Without Duct Fan)

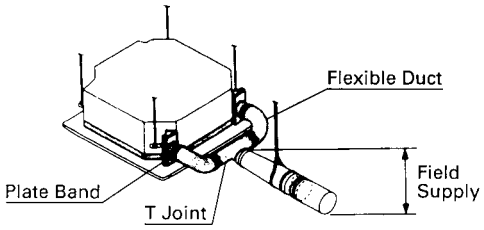

Note:
1. As the principle, the duct fan is unnecessary for 4 meters or less. When needing enough fresh air taking-in, use Kit with Duct Fan of optional, which is shown in the following.
2. The other part of Fresh air intake kit (Duct, T Joint, Air Filter, Hood, etc) is field supplied.
3. It isn't possible to do simultaneous use with wireless remote controller.

• Example of Installation

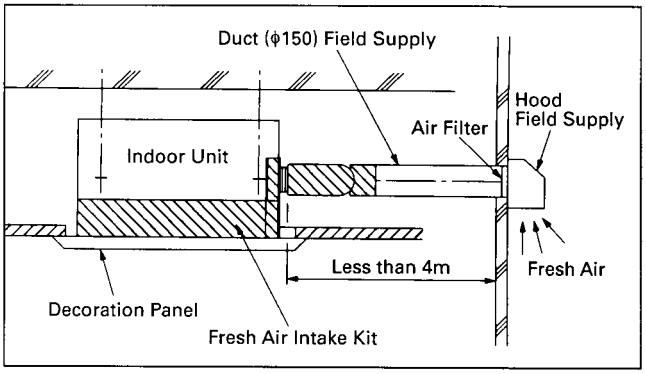

• Specifications

Item \ Kit Name	KDDP55D160K
Method of Fresh Air Intake	Fresh Air Intake by The Indoor Unit Fan
Size of Connecting Duct	ϕ150
Applicable Models	For Indoor Unit

(B0418)

KDDJ55X160 – Fresh Air Intake Kit

The fresh air is taken into the unit by the indoor unit fan or duct fan, which is field supplied. The location of fresh air intake port will be changeable by installing the duct fan.

KDDJ55X160

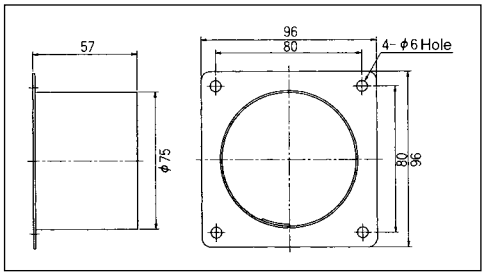

J : D3K2175

Remarks:
1. This kit can be installed to the Ceiling mounted cassette type (Multi-flow).
2. When installing this kit, duct(Nominal dia. : φ75)is required on site.

Contents
Prior to installation, make sure you have the complete kit of parts.

Name	①Duct Flange	② Screws	③Insulation for Duct Flange	④Insulation for Opening of Unit	⑤ Installation Manual
Q'ty	1 piece	4 pieces	1 piece	1 piece	1 piece
Shape	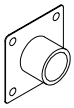	 M4×12	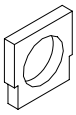		

Necessary tools
Philips head screw driver, nipper, cutter etc.

1 Installation procedures of Duct flange

The method of installation varies with indoor unit type.
The unit type can be distinguished by the position of knockout hole.
1. Cut off the knockout hole on the side plate. (Fig. 1)

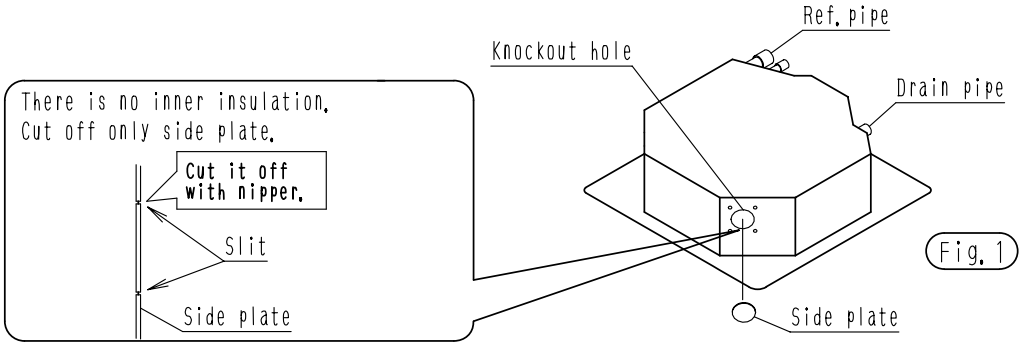

Fig. 1

2. Adhere the insulation④ for opening of unit to the opening. (Fig. 2)

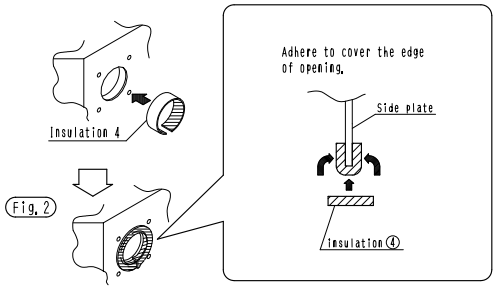

Fig. 2

C : 2P066796B

3. Install the duct flange① with screws② (M4×12, 4 screws) to the opening and adhere the insulation③ (Fig. 3)

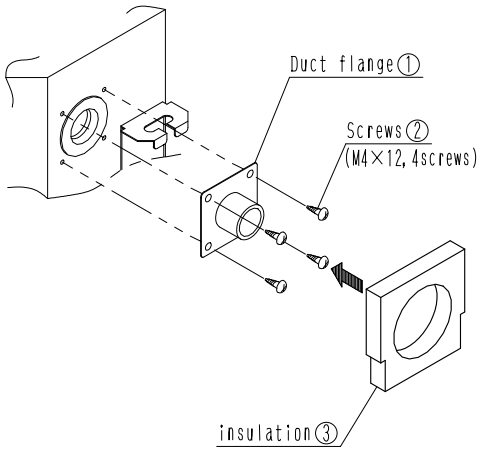

Fig. 3

② Installation procedures of Duct<Nominal diameter of duct: φ75>

1. Connect the duct to the duct flange. (Flange fits inside the duct.) (Fig. 4)
2. After connection, wrap vinyl tape (field supply) around the duct connection to prevent air leak.

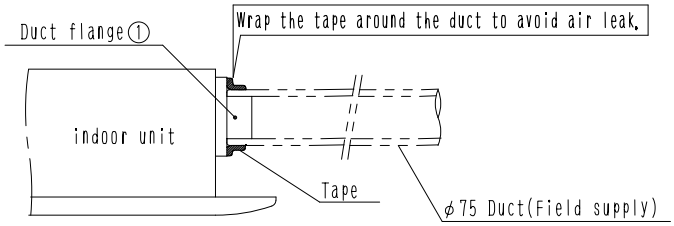

Fig. 4

Precaution

1. ALL ducts must be completely insulated.
2. Do not do the followings when installing duct.

2-1) To bend the duct excessively



WRONG

2-2) To bend the duct too many times

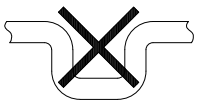

WRONG

2-3) To reduce the duct diameter

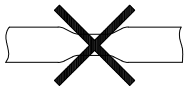

WRONG

3. In case that metal duct is penetrated through wooden walls, make sure the duct and the wall electrically insulated.
4. Install the outdoor unit duct inclined downwardly so that the rain may not get into the duct. (Inclination 1/100 to 1/50)
5. To avoid birds, small animals or insects getting inside the duct, make sure to install net where it contacts the outside air.

C : 2P066796B

KAFP556D80 · 160 – High Efficiency Filter Unit (Including Filter Chamber)
KAFP557D80 · 160 – High Efficiency Filter Unit (Including Filter Chamber)

Combination table

High Efficiency Filter Unit (Set)	Replacement High Efficiency Filter	Filter Chamber
KAFP556D80 KAFP557D80	KAFP552H80 KAFP553H80	KDDFP55D160
KAFP556D160 KAFP557D160	KAFP552H160 KAFP553H160	

KAFP552H80 · 160 – Replacement High Efficiency Filter
KAFP553H80 · 160 – Replacement High Efficiency Filter

Specifications

Replacement High Efficiency Filter	KAFP552H80	KAFP552H160	KAFP553H80	KAFP553H160
Filter Chamber	KDDFP55D160			
Collecting Efficiency (%)	65% (NBS Colorimetric method)		90% (NBS Colorimetric method)	
Initial Pressure Loss (Pa)	34 or less			
Final Pressure Loss (Pa)	98 or less			
Filter	Non-woven Fabric of Synthetic Fiber		Non-woven Fabric of Synthetic Fiber	
Life (h)	2,500 h (Dust Concentration 0.15 mg / m^3)		1,800 h (Dust Concentration 0.15 mg / m^3)	
Models to be Applied	25~80 Model	100 · 125 Model	25~80 Model	100 · 125 Model

Precaution at use

1. The high efficiency filter, and the other filter can not be installed together.
2. The unit should be operated with 4-way discharge when the high efficiency filter is installed. It can not be applied to the high ceiling room.
3. Field setting by remote controller is necessary when the high efficiency filter is installed.

Dimension

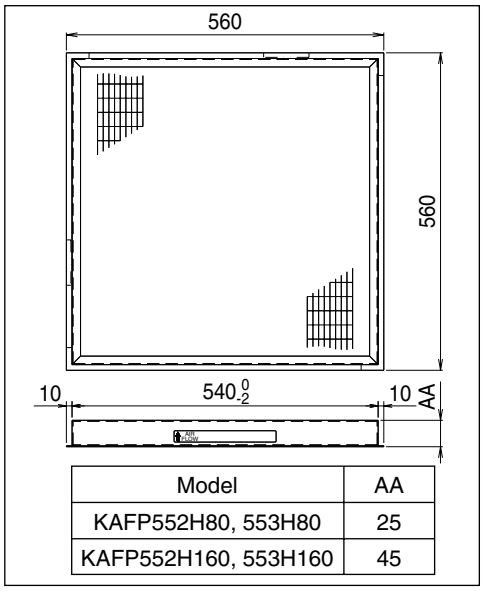

Model	AA
KAFP552H80, 553H80	25
KAFP552H160, 553H160	45

J : D3K04256A

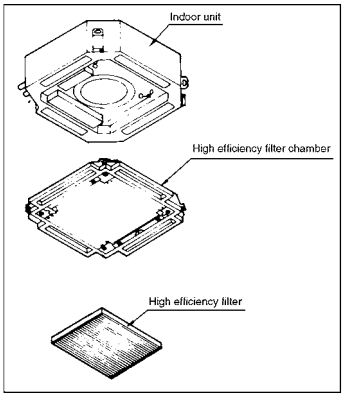

KRP1D98 – Installation Box for Adaptor PCB

Caution

- This box is mountable on the ceiling mounted cassette type (multi-flow type) unit. After confirming the indoor unit model name, mount this box on the unit listed in the table shown right.
- When mounting the box, see also the indoor unit installation manual and the adapter PCB (Printed Circuit Board) mounting instruction.

Kit name	Indoor unit model that party crowded is possible	
KRP1D98	SPLIT	FHYCP50・60・71・100・125DVE FHYCP71・100・125・140DVL FCQ71・100・125・140D(A)V3B
	VRV	FXF25・32・40・50・63・80・100・125LVE FXF25・32・40・50・63・80・100・125LVEC FXFQ25・32・40・50・63・80・100・125MVE

Accessories

Check if the following accessories are included with your kit.

Name	Adapter box	Adapter box cover	Clamp	Screw(1)	Screw(2)	Installation manual
Quantity	1PC.	1PC.	8PCS.	2PCS.	2PCS.	1PC.
Shape	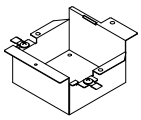	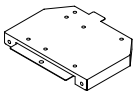		 M4×12	 M4×8	

❶ Mounting the adapter box

《Preparation before wiring》

①Remove the switch box cover and the terminal cover. (Fig. 1)
②Open the switch box until it almost touches the bell mouth. (Fig. 2)

《Mounting the adapter box》

①Fix the box with the attached fixing screws (1) at two places and the fixing screw (2) at one place. (Fig. 3)

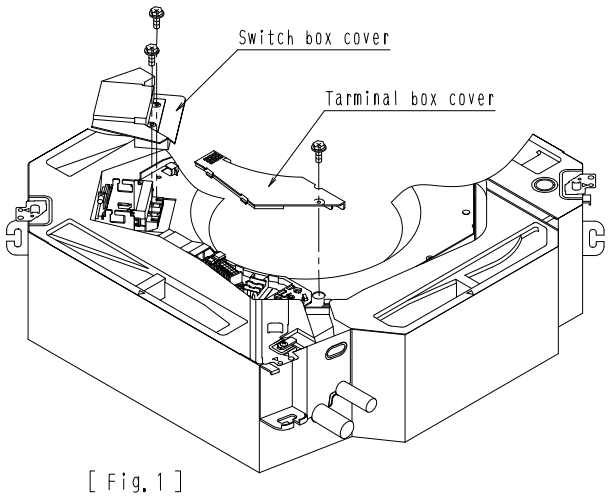

[Fig. 1]

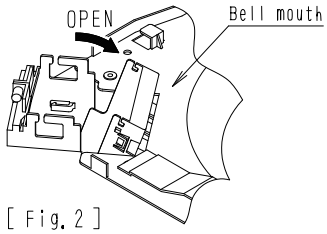

[Fig. 2]

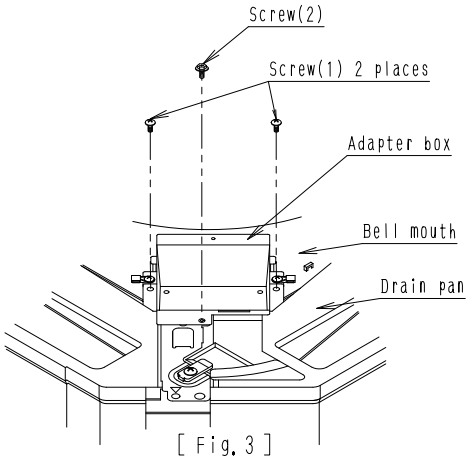

[Fig. 3]

1P086302B

❷ Mounting the adapter PCB

《How to mount the adapter PCB》

① Connect the wiring to the adapter PCB.
(The work is easier if the wiring is connected to the PCB first.)
- See the instruction attached to the adapter PCB for where to connect the wiring.

② Mount the adapter PCB on the adapter box and the adapter box cover.

Adapter PCB	Place where to mount
Adapter for wiring	The PCB to be mounted on the adapter box cover. (Fig. 1)
Wiring adapter for electrical appendices(1)(2)	The PCB to be mounted on the adapter box. (Fig. 2)

- For the mounting position of the adapter PCB, see the instruction attached to the adapter PCB.

③ Bind the wiring from the adapter PCB (signal wires, power supply wires) with the attached clamp. (Fig. 1) (Fig. 2)

④ After putting the claw of the cover into the hole of the box, fix them with the attached screw (2). (Fig. 3)
- Take precautions to prevent the wires from getting caught.

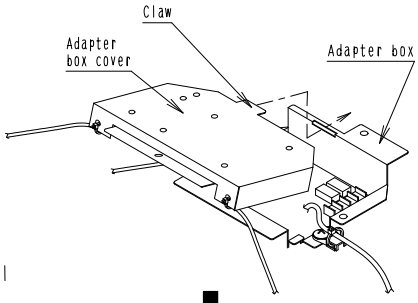

〈Adapter for wiring〉

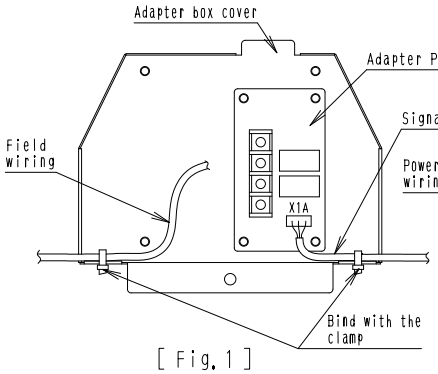

[Fig. 1]

〈Wiring adapter for electrical appendices(1)(2)〉

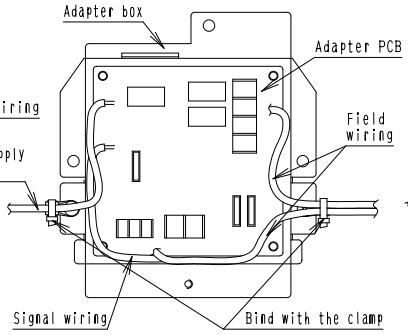

[Fig. 2]

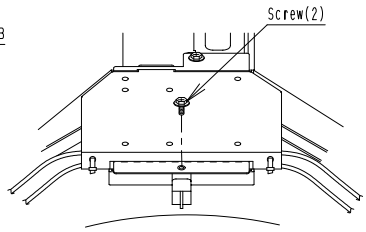

[Fig. 3]

❸ How to handle the wiring

《Wiring to the indoor unit》

Connect the wiring from the adapter PCB to the indoor unit. (signal wires, power supply wires)
- See the instruction attached to the adapter PCB for the place where to connect the wires on the indoor unit.

① Fix the internal wirings.
- Bind the wiring from the adapter box to the indoor unit switch box and to the terminal box according to the drawing shown on the right with the attached clamp.
- Bind the the surplus wires and the other wiring together with the clamp.

② Shut the switch box and secure firmly the switch box cover and the terminal box cover in place in opposite order of removing.
- Take precautions to prevent the wires from getting caught.

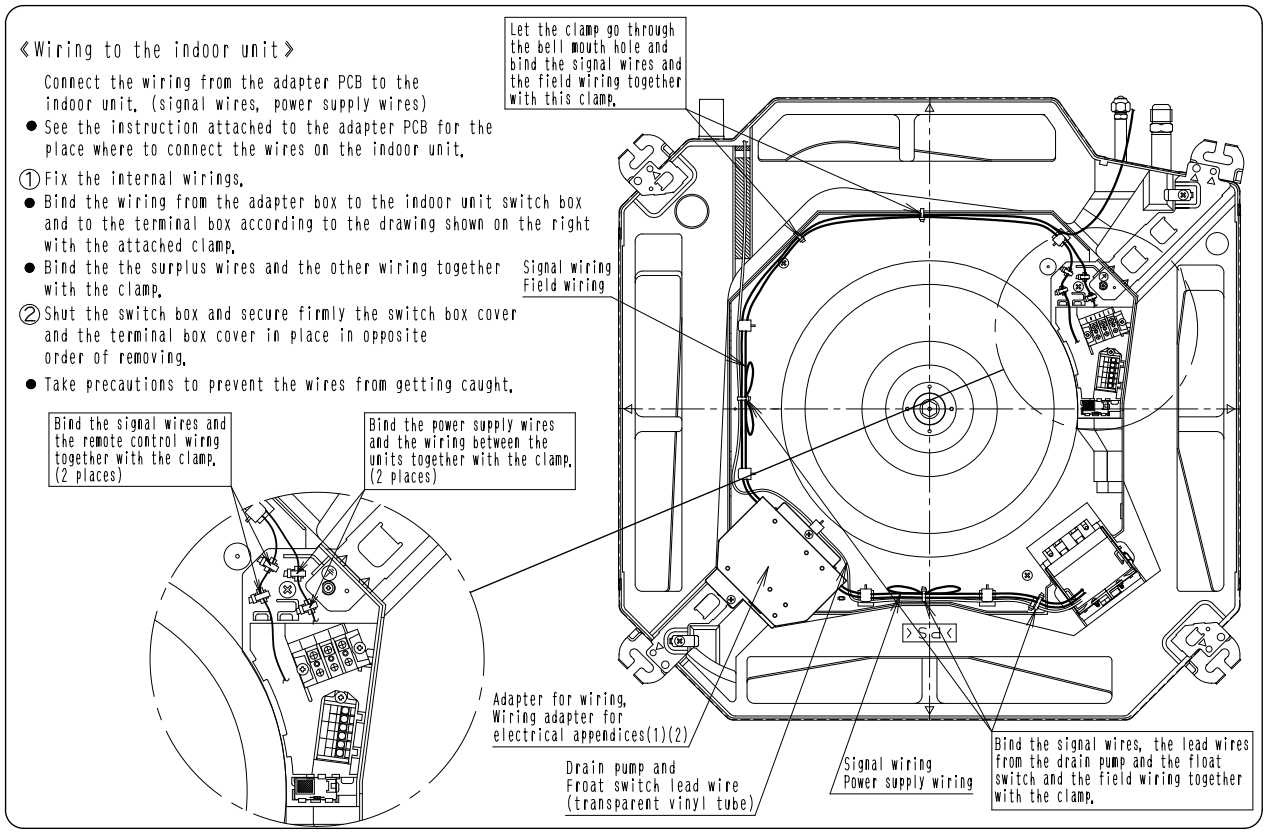

1P086302B

KDDFP55D160 – High Efficiency Filter Chamber

⚠Caution Before starting the installation work, carefully read the following safety precautions and observe them to ensure safety during work.

- Make sure to use the attached or spcified components to install the prducts. Otherwise, it may cause air leak or the product may fall.
- After installation, check whether there is no abnomality during the trial operation.

REMARKS

- This kit can be installed to the Ceiling Mounted Cassette Type Air Conditioner<Multi-flow type>.
- Before installation, make sure the indoor unit model name.
- Refer to the installation manuals for the indoor unit and the decoration panel.

Notes (In case of useing the Ultra-long life filter)

Ultra-long life filter can be reused by cleaning.
After installtion, instruct filter cleaning periad and removeing to customers.

Components Check if following parts are included with your kit.

Name	Filter chamber	Installation manual
Shape	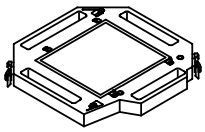	
Quantity	1 PC.	1 PC.

Combination table

Kit name	High Effciency filter	Ultra-long life filter	Indoor unit model that party crowed is possible	
KDDFP55D160 KDDF55DA160	KAFP552H80 KAF552HA80 or KAFP553H80 KAF553HA80	KAFJ55K160H KAF55KA160H	SPLIT	FHYCP50・60・71DVE FHYCP71DVL
			VRV	FXF25・32・40・50・63・80LVE FXF25・32・40・50・63・80LVEC FXFQ25・32・40・50・63・80MVE
	KAFP552H160 KAF552HA160 or KAFP553H160 KAF553HA160		SPLIT	FHYCP100・125DVE FHYCP100・125・140DVL
			VRV	FXF100・125LVE FXF100・125LVEC FXFQ100・125MVE

❶ Preparation of indoor unit

- When you instell the Ultra-long life filter, the setting by the remote controller is required. Set the remote controller at the field setting mode and change the setting position number as shown on the table. Refer to the operation manual of remote controller for the field setting.

Filter name		Mode No.	Setting switch No.	Setting position No.		Contents of setting
High Effciency filter	Only 80	13 or 23	0	02		———
	Both 80 and 160		1	02		
Ultra-long life filter		10 or 20	0	Less dusty place	01	Filter cleaning period :Every 10,000 hrs
				Dusty place	02	Filter cleaning period :Every 5,000 hrs
			1	02		Filter sign display:Ultra-long life filter

❷ Installation of Filter chamber

1. Remove the decoration panel. (This is not required for the new installtion)
   - Remove the decoration panel in the reverse step when the panel is installed. (Refer to the installation manual of the decoration panel for the details.)
2. Temporarily install the filter chamber to the indoor unit by hanging the lutch on the opposite side of the filter chamber to the hook of the indoor unit body. (2 portions) Temporarily hang the remaining 2 hooks of the filter chamber to the hooks on the sides of the indoor unit. (fig. 1) ~ (fig. 3) (When the indoor unit is already installed, hang the hook to the suspennsion bracket temporarily and fix the hook.)
   ✱Installation set outline of the indoor unit (fig. 2)
3. Tighten 2hexahead screws located beneath the lutches until the thickness of the sealing material (fig. 4) (fig. 5) of chamber reduces to 5~8mm.

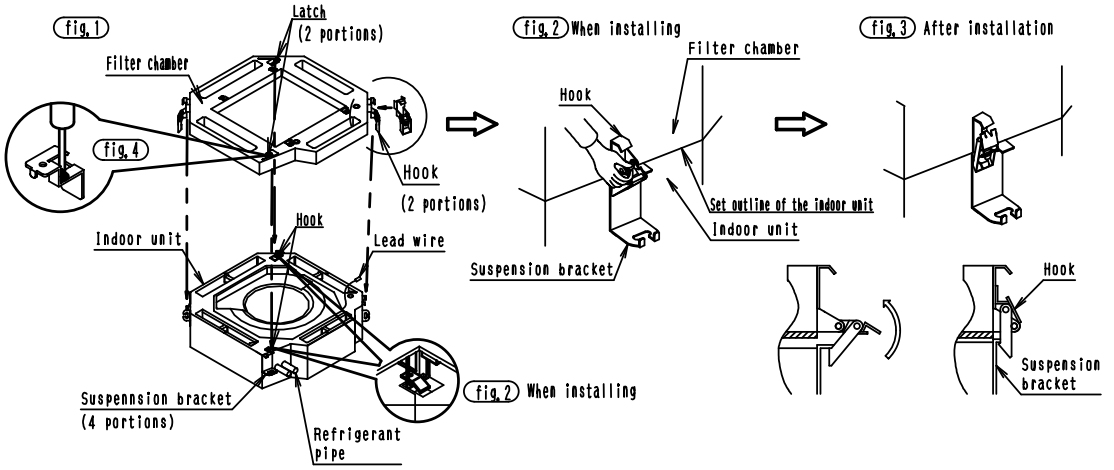

C : 3K011148B

fig. 5 When completed

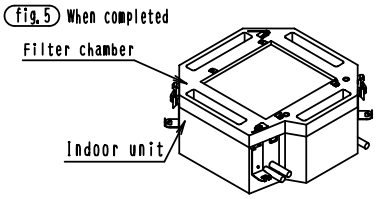

❸ Installation of the indoor unit and the Filter chamber

- Install the indoor unit and the filter chamber.
  Refer to the installation manual of the indoor unit.
  (For the height of the unit, refer to the drawing on the right.)
- Be complete installated refrigerant piping, and drain piping.
- Attach the paper pattern for installation to the indoor unit with screws to protect the indoor unit from dirt. [See below]
  (When the indoor unit is newly installed)
  (See below)
- In case of attaching the chamber after installed indoor unit.
  For the height of the unit, change the height shown on the right drawing.

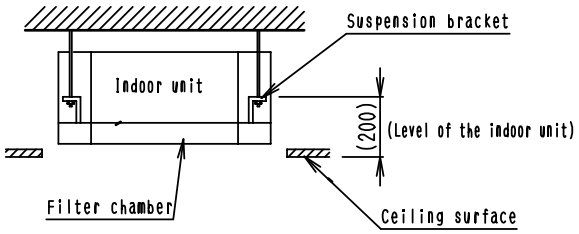

〔Attachment of the paper pattern〕

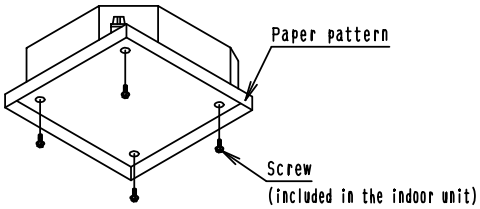

❹ Installation of Decoration panel and the Filter

- Install the Decoration panel in accordance with the installation manual attached to the decoration panel.

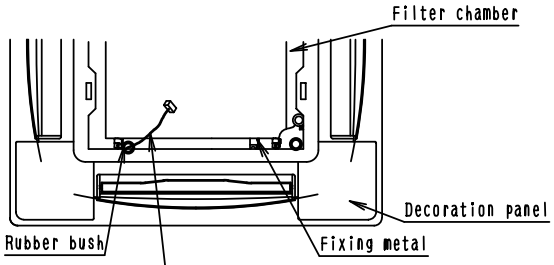

(Before fixing the Chamber, put the lead wire through Rubber bushing hole.)

- Installation of Filter
  After connecting, install the Filter chamber. fig. 6

fig. 6

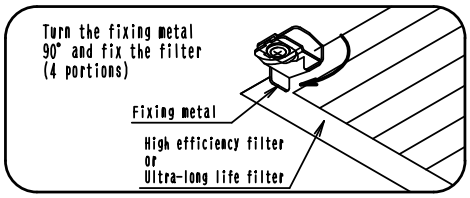

In case of the panel for Wireless remote controller

- Put the Connector for receiver lead wire through rubber bush and connect to the indoor PC board.
- Refer to the installation manual attached to the Wireless remote controller kit(optional)for the detail.

3K011148B

KAFJ551C160 – Long-Life Filter for Decoration Panel (Replacement)

- **Specifications**

Life	5,000 h (Dust concentration 0.15 mg / m³)
Average collecting efficiency	65 % (Gravimetric method)
Filter material	Mildew proof resin net
Quantity per unit	1
Applicable models	25~125 model

(B0479)

KAFP55D160 – Ultra Long-Life Filter

⚠Caution Before starting the installation work, carefully read the following safety precautions and observe them to ensure safety during work.

- Make sure to use the attached or spcified components to install the prducts. Otherwise, it may cause air leak or the product may fall.
- After installation, check whether there is no abnomality during the trial operation.

REMARKS

- This kit can be installed to the Ceiling Mounted Cassette Type Air Conditioner<Multi-flow type>.
- Before installation, make sure the indoor unit model name.
- Refer to the installation manuals for the indoor unit and the decoration panel.

Notes

Ultra-long life filter can be reused by cleaning.
After installtion, instruct filter cleaning periad and removeing to customers.

Combination table

Kit name	Indoor unit model that party crowded is possible	
KAFP55D160 KAF55DA160	SPLIT	FHYCP50·60·71·100·125DVE FHYCP71·100·125·140DVL
	VRV	FXF25·32·40·50·63·80·100·125LVE FXF25·32·40·50·63·80·100·125LVEC FXFQ25·32·40·50·63·80·100·125MVE

Components Check if following parts are included with your kit.

Name	Ultra-long Life Filter Unit	Installation manual
Shape	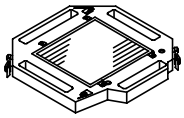	
Quantity	1 PC.	1 PC.

❶ Preparation of indoor unit

- When you instell the Ultra-long life filter, the setting by the remote controller is required. Set the remote controller at the field setting mode and change the setting position number as shown on the table. Refer to the operation manual of remote controller for the field setting.

Mode No.	Setting switch No.	Setting position No.		Contents of setting
10 or 20	0	Less dusty place	01	Filter cleaning period :Every 10,000 hrs
		Dusty place	02	Filter cleaning period :Every 5,000 hrs
	1	02		Filter sign display:Ultra-long life filter

❷ Installation of Ultra-long life filter Unit

1. Remove the decoration panel. (This is not required for the new installtion)
   - Remove the decoration panel in the reverse step when the panel is installed. (Refer to the installation manual of the decoration panel for the details.)
2. REmove the Ultra-long life filter. (fig. 1)
3. Temporarily install the filter chamber to the indoor unit by hanging the lutch on the opposite side of the filter chamber to the hook of the indoor unit body. (2 portions)
   Temporarily hang the remaining 2 hooks of the filter chamber to the hooks on the sides of the indoor unit. (fig. 2) ~ (fig. 4)
   (When the indoor unit is already installed, hang the hook to the suspennsion bracket temporarily and fix the hook.)
   ※Installation set outline of the indoor unit (fig. 3)
4. Tighten 2hexahead screws located beneath the lutches until the thickness of the sealing material (fig. 5) (fig. 6) of chamber reduces to 5~8mm.

(fig. 1)

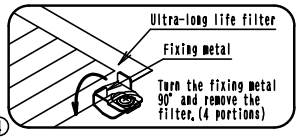

(fig. 2)

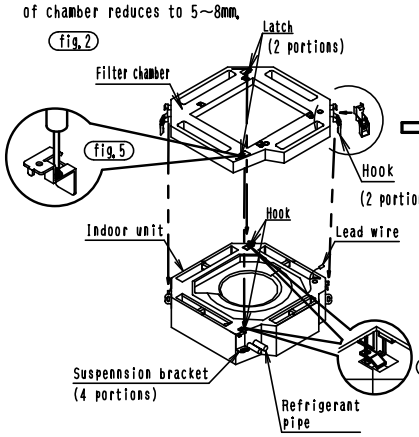

(fig. 3) When installing

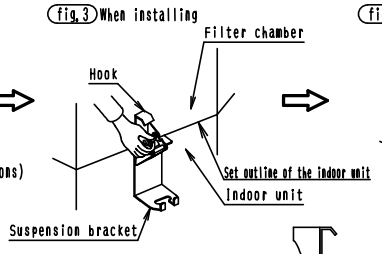

(fig. 4) After installation

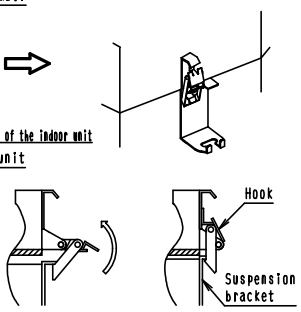

3K011147B

fig. 6 When completed

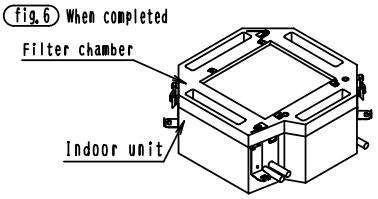

③ Installation of the indoor unit and the Ultra-long life filter unit

- Install the indoor unit and the Ultra-long life filter unit.
  Refer to the installation manual of the indoor unit.
  (For the height of the unit, refer to the drawing on the right.)
- Be complete installated refrigerant piping, and drain piping.
- Attach the paper pattern for installation to the indoor unit with screws to protect the indoor unit from dirt. [See below]
  (When the indoor unit is newly installed)
  (See below)
- In case of attaching the chamber after installed indoor unit.
  For the height of the unit, change the height shown on the right drawing.

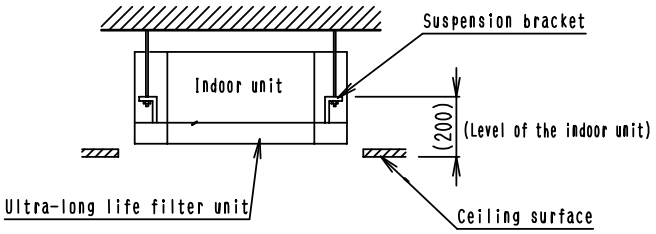

〔Attachment of the paper pattern〕

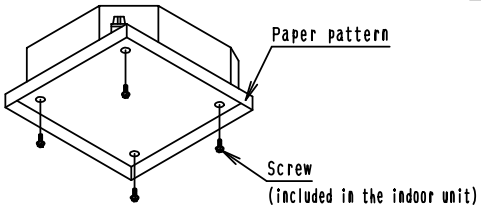

④ Installation of the Decoration panel and the Ultra-long life filter

- Install the Decoration panel in accordance with the installation manual attached to the decoration panel.

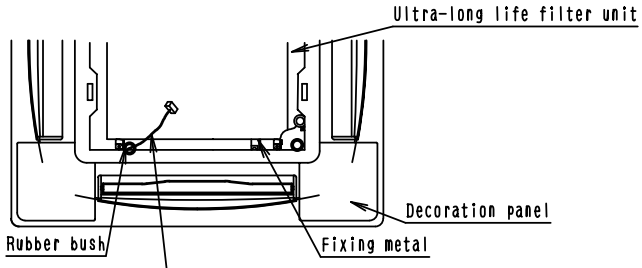

(Before fixing the Chamber, put the lead wire through Rubber bushing hole.)

- Installation of the Ultra-long life filter
  After connecting, install the Filter chamber. fig. 7

fig. 7

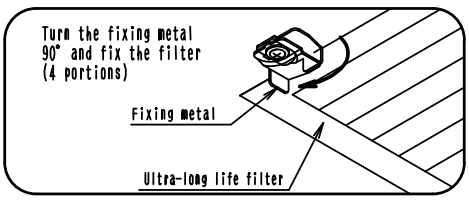

In case of the panel for Wireless remote controller

- Put the Connector for receiver lead wire through rubber bush and connect to the indoor PC board.
- Refer to the installation manual attached to the Wireless remote controller kit(optional)for the detail.

3K011147B

KKSJ55K160 – Chamber Connection Kit

Combining with option accessories (chamber-type)

- This chamber connection kit is for use with the multi-flow set. Refer to the catalog, etc. for details on the separately sold items (chamber-type) to be connected.
- Refer to the table at right for combinations of this kit and other option accessories(chamber-type). Also, be sure to install the fresh air intake (chamber-type) kit above.

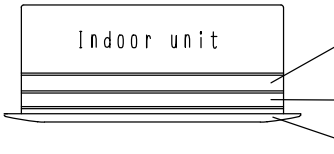

	Above: Option accessories (chamber-type)	Above: Fresh air intake kit
below	Air purification unit	○
below	High Effciency filter unit	○
below	Ultra-long life filter unit	○
below	Fresh air intake kit	

Combinations not listed in this table should not be attempted as they will cause malfunctions.

Contents of parts

Check the following parts

Name	Relay harness	Clamping material
Shape	①	②
Quantity	1 PC.	2 PCS.

Installation of the Chamber connection kit.

Refer to the installation (attachment) manuals included with the indoor unit, the option accessories (chamber-type), and Decoration panel for details on installation (attachment).

Caution

Extend the Decoration panel's swing motor lead wire using the included relay harness ① and connect it to the indoor unit. When doing this, use the included clamping material ② to tie the lead wire so it does not droop.

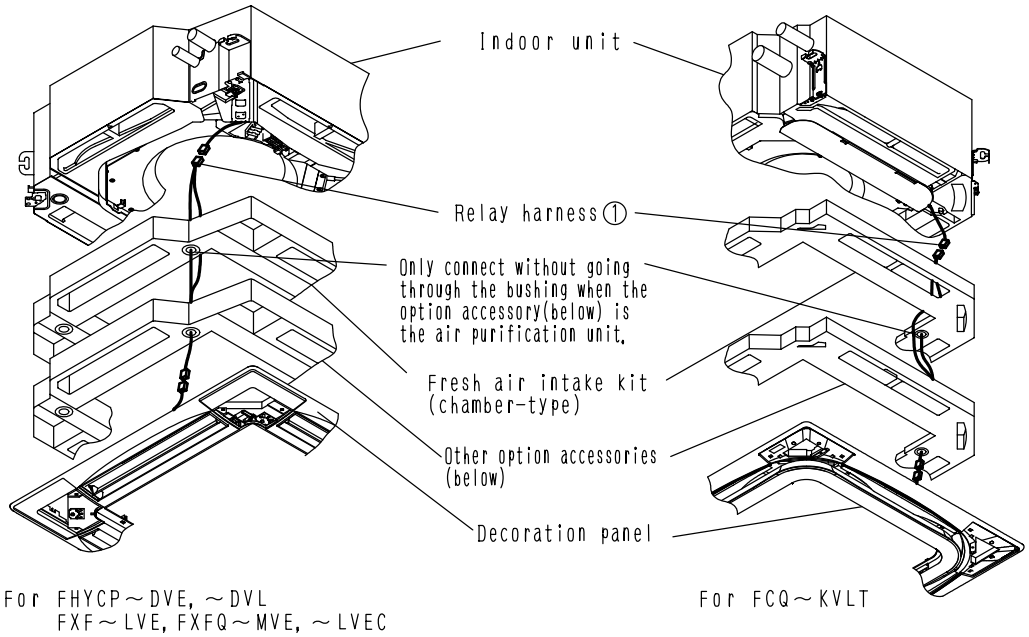

3P089651C

KDP55D80 · KDP55D160 – Branch Duct Chamber

REMARKS

- This kit can be installed to the Ceiling Mounted Cassette Type Air Conditioner<Multi-flow type>.
- Before installation, make sure the indoor unit model name.
- Refer to the installation manuals for the indoor unit and the decoration panel.

Combination table

Kit name		Indoor unit model that party crowed is possible
KDP55D80	SPLIT	FHYCP50 • 60 • 71DVE FHYCP71DVL FCQ71D(A)V3B
	VRV	FXF25 • 32 • 40 • 50 • 63 • 80LVE FXFQ25 • 32 • 40 • 50 • 63 • 80MVE FXF25 • 32 • 40 • 50 • 63 • 80LVEC
KDP55D160	SPLIT	FHYCP100 • 125DVE FHYCP100 • 125 • 140DVL FCQ100 • 125 • 140D(A)V3B
	VRV	FXF100 • 125LVE FXFQ100 • 125MVE FXF100 • 125LVEC

Contents of kit Check if the following parts are included with this kit.

NAME		Branch Duct Chamber	Screw	Installation Manual	Sealing Material	Tape for fixing the Sealing Material
Shape • Number			M4x16			
Q'ty	80	1 PC.	10 PCS.	1 PC.	2 PCS.	2 PCS.
	160					

NAME		Indoor unit insulation material				Indoor unit opening seal material			Moisture Absorber for Swing flap	Spacer	Spacer installation screw
Shape • Number		①	②	③	④	⑤ (Small)	⑥A (Large)	⑥B (Large)	⑦ There are 5 types (colors) to match the panel color	⑧	⑨ (M3x10)
Q'ty	80	1 PC.	1 PC.	1 PC.	1 PC.	2 PCS.	2 PCS.	—	3 PCS. (5types)	1 PC.	1 PC.
	160						1 PC.	1 PC.			

❶ Pre-installation preparations

This branch duct can be used for 4 directions independently or 2 directions at once.

- You may choose the following outlet directions for this branch duct chamber. Select the outlet direction that best fits the shape of the room or the installation location. (Outlet directions other than the below cannot be selected)
- Select the duct length and outlet vent according to the external static sound pressure and fan strength characteristics(refer to the technical guide).

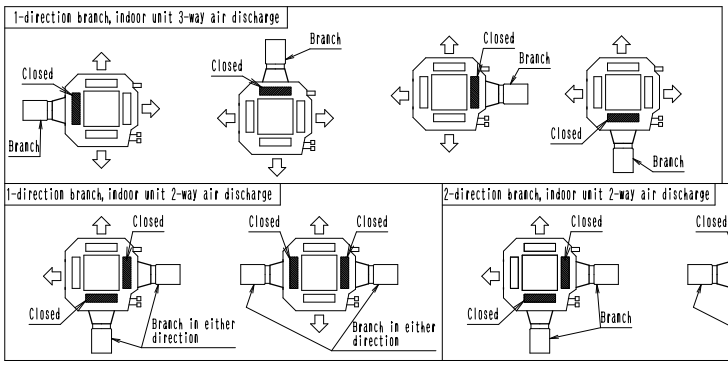

Caution

- Be sure to completely seal off the air outlet on the indoor unit to which the branch duct chamber is attached. If the seal in imperfect, this may cause water splattering and condensation.
  (REfer to ❹ Installation of the sealing material to the indoor unit)
- When attaching the Branch Duct Chamber, be sure to perform the setting for indoor unit.
  (Refer to ❺ Setting for Indoor unit)

❷ Installation of the Branch Duct Chamber

When installing the indoor unit after attaching the Branch Duct Chamber (for a new installation), avoid applying undue pressure on the Branch Duct Chamber. (This may damage it.)

(1) Select the position to attach the Branch Duct Chamber. (fig. 1)

(2) Attach the Branch duct chamber to the indoor unit following the steps below. (the fig. shows the ① side.)

1) Cut off the indoor unit side panel to which the Branch duct chamber will be attached along the slit. Next, cut off the interior insulating material along the groove. (Cut off the slit part using nippers, and the groove part using cutters.) (fig. 2)

2) Attach the sealing material so that it hides the gap between the side panel and interior insulating material. (fig. 3)

- First attach the indoor unit opening seal material (small) ⑤ to right and left of the opening, then the indoor unit opening seal material (large) ⑥ above and below. At this time, fold the Indoor unit opening seal material in so that the gap between the side panel and interior insulating material is hidden.

3) Attach the Branch duct chamber. (fig. 4)

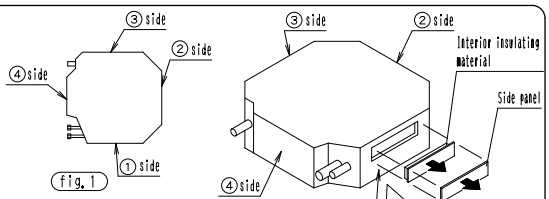

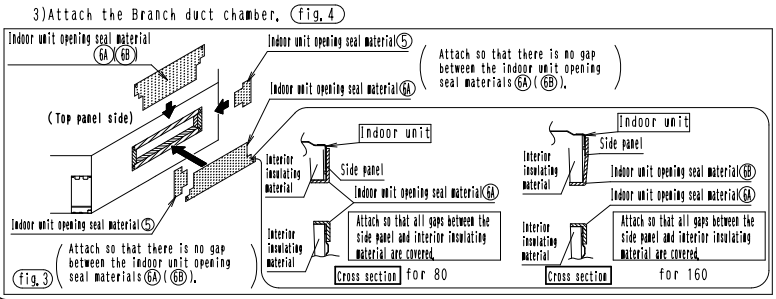

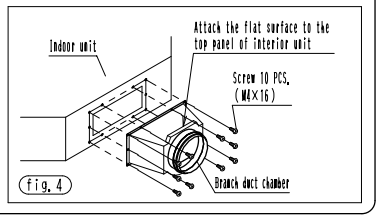

1P089650C

(3) Attach the Indoor unit insulating material to the indoor unit. (The fig. shows the ① side.) fig. 5

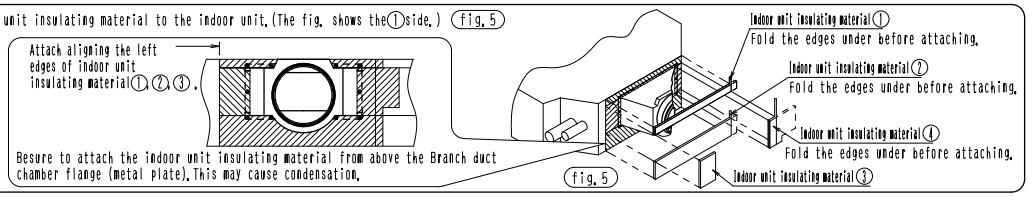

❸ Duct connection 《Duct: KDP55D80・KDP55DA80 …diameter φ150 KDP55D160・KDP55DA160…diameter φ200》

1) Attach the duct to the outside of the Branch duct chamber. fig. 6
- Wrap the duct tape (Field supplied) around the connection to prevent air leak.
- Insulate the duct to prevent condensate.

2) Do not perform the following duct work.

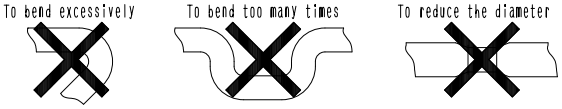

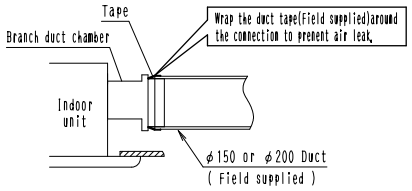

fig. 6

Caution
- follow the local code or regulation to install the duct.
- In case that metal duct is penetrated through wooden wall, make sure the duct and the wall are electrically insulated.

❹ Installation of the sealing material to the indoor unit 《The sealing material included in this kit is enough for two air outlets.》

- Select which air outlet to be closed off referring to ❶ **Pre-installation preparations**. Be sure to close off the branch duct attachment side.

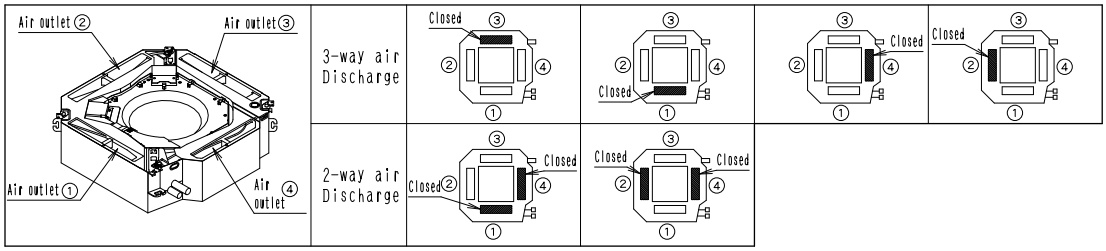

(1) Prepare the sealing material and the tape for fixing the sealing material according to the air outlet No. To be closed.
- Cut off the sealing material and the tape along the perforated lines (marked – – –).
- Adhere the sealing material to tape. (Make sure that the sealing material is placed at the center of the tape.)

(2) Adhere the sealing material prepared according to the procedure (1) to the indoor unit air outlet.

Example) For closing the air outlet ①

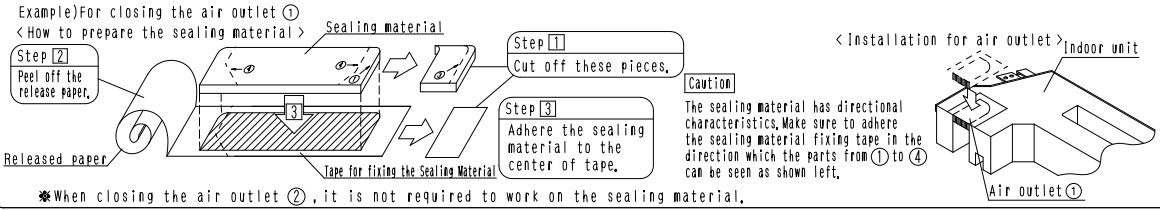

✱When closing the air outlet ②, it is not required to work on the sealing material.

❺ Setting for indoor unit

- When you install the Branch duct chamber, the setting by the remote controller is required.
  Set the remote controller at the field setting mode and change the setting position number as shown on the table.
  Refer to the operation manual of remote controller for the field setting.

Branch and air discharge patterns	Mode No.	Setting switch No.	Setting position No.
1-direction branch, 3-way air Discharge	13 or 23	1	02
1-direction branch, 2-way air Discharge or 2-direction branch, 2-way air Discharge			03

❻ Installation of Decoration panel

Please turn off the power supply for safety absolutely, before you do affixation of insulation and connected work of swing conector.

Refer to the installation manual for the decoration panel. After installing the decoration panel, make sure there are no gaps between it and the indoor unit.

- Please install spacer ⑧ on the swing motor with the spacer installation screw ⑨.

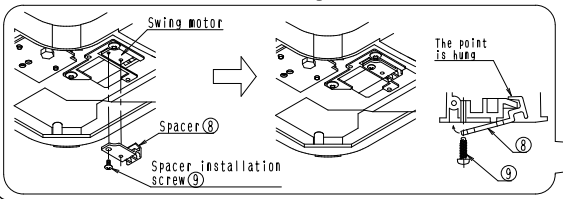

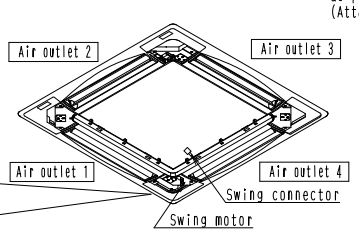

- Attach the horizontal flap moisture absorbing material to the horizontal flaps on the Air outlet as per the figure at bottom. (Attach, matching the color of the panel.)

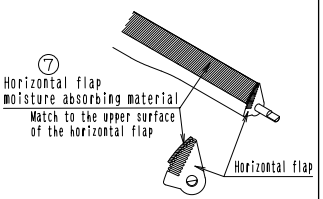

✱All air outlets which have not been closed off.

1P089650C

FXKQ-MA
Ceiling Mounted Cassette
Corner Type

1. Features 92
2. Specifications 93
3. Dimensions 94
4. Piping Diagrams 96
5. Wiring Diagrams 97
6. Electric Characteristics 98
7. Capacity Tables 99
   7.1 Cooling Capacity 99
   7.2 Heating Capacity 100
8. Air Velocity and Temperature Distributions (Reference Data) 101
9. Sound Levels 102
10. Installation 103
11. Accessories 106

1. Features

215 mm-thick body features discreet, slim design and offers a wide variety of discharge methods and mounting such as in corners or in suspended ceilings, etc.



- Single-flow type offers effective air discharge from corners of from a suspended ceiling.

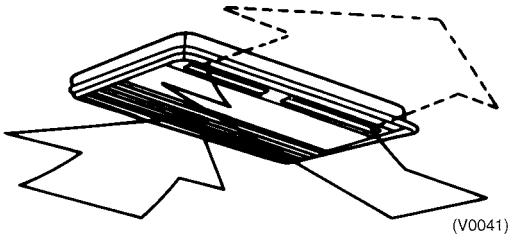

- Thin, discreet design enables mounting when the ceiling pocket is as shallow as 22 cm
- Temperature Distribution (FXKQ63MA : downward discharge angle 65° in heating.).

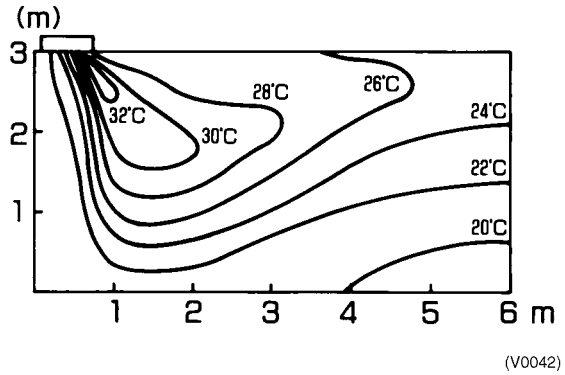

- Air velocity Distribution (FXKQ63MA : downward discharge angle 65° in heating.)

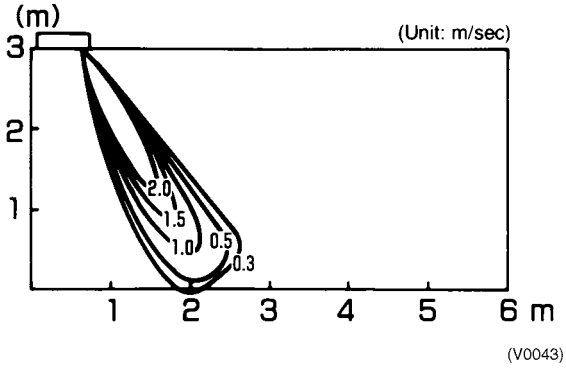

- Air volume switch built into the main body allows mounting in ceilings as high as 3.8 m. This unit is even able to handle spaces with a split level ceiling by accurately adjusting air volume in accordance with the ceiling height.

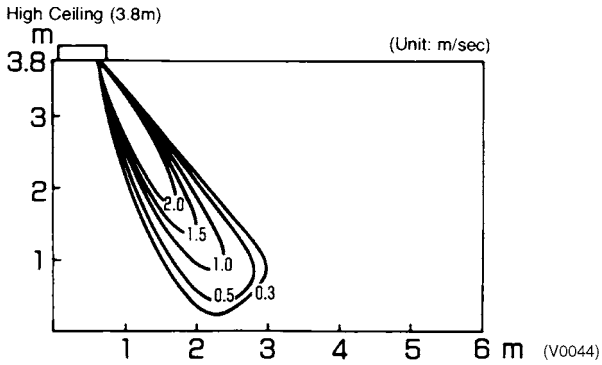

- The 63 class (equivalent to 2.5 HP) features extremely quiet operation, only 42 dBA of sound level.
- In addition to downward discharge, front discharge (straight discharge, neither angled upward nor downward) can be provided by mounting an air discharge unit (optional) to the front of the body; can be mounted even with difficult elements such as suspended ceilings and sagging walls. A combination of front and downward discharge is also possible. (Auto-swing cannot be used with front discharge.)

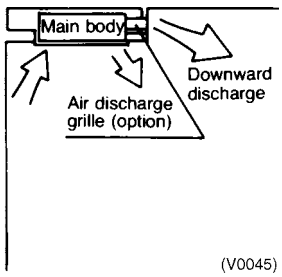

* Set for front discharge using a suspended ceiling

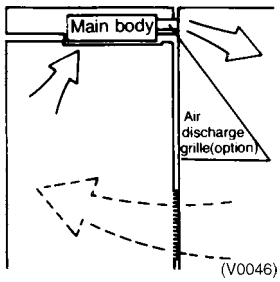

Downward discharge is shut off and air is blown straight out (front discharge)

- Equipped with a programmed drying mechanism that dehumidifies while inhibiting changes in room temperature.
- Includes as standard equipment a long-life filter that is maintenance-free for approximately one year. (Treated to mold resistant.)
- Equipped with drain pump kit that makes possible draining in the upward direction up to 500 mm from the ceiling surface.
- Decoration panel is thin and unimposing, doesn't clash with interior design and provides an excellent finishing touch for the ceiling. (Available in white.)
- If the ceiling pocket is shallow and the main body will not fit, a thick panel that provides aesthetically appealing cover for the exposed portion (up to 20 mm) is available as an option.

2. Specifications

Ceiling Mounted Cassette Corner Type

Model				FXKQ25MAVE	FXKQ32MAVE	FXKQ40MAVE	FXKQ63MAVE
∗1 Cooling Capacity (19.5°CWB)			kcal/h	2,500	3,200	4,000	6,300
			Btu/h	9,900	12,600	16,000	24,900
			kW	2.9	3.7	4.7	7.3
∗2 Cooling Capacity (19.0°CWB)			kW	2.8	3.6	4.5	7.1
∗3 Heating Capacity			kcal/h	2,800	3,400	4,300	6,900
			Btu/h	10,900	13,600	17,100	27,300
			kW	3.2	4.0	5.0	8.0
Casing				Galvanized Steel Plate	Galvanized Steel Plate	Galvanized Steel Plate	Galvanized Steel Plate
Dimensions: (H×W×D)			mm	215×1,110×710	215×1,110×710	215×1,110×710	215×1,310×710
Coil (Cross Fin Coil)	Rows×Stages×Fin Pitch		mm	2×11×1.75	2×11×1.75	2×11×1.75	3×11×1.75
	Face Area		m²	0.180	0.180	0.180	0.226
Fan	Model			3D12H1AN1V1	3D12H1AN1V1	3D12H1AP1V1	4D12H1AJ1V1
	Type			Sirocco Fan	Sirocco Fan	Sirocco Fan	Sirocco Fan
	Motor Output × Number of Units		W	15×1	15×1	20×1	45×1
	Air Flow Rate (H/L)	50 Hz	m³/min	11/9	11/9	13/10	18/15
			cfm	388/318	388/318	459/353	635/530
		60 Hz	m³/min	11/8.5	11/8.5	13/10	18/13
			cfm	388/300	388/300	459/353	635/459
	Drive			Direct Drive	Direct Drive	Direct Drive	Direct Drive
Temperature Control				Microprocessor Thermostat for Cooling and Heating	Microprocessor Thermostat for Cooling and Heating	Microprocessor Thermostat for Cooling and Heating	Microprocessor Thermostat for Cooling and Heating
Sound Absorbing Thermal Insulation Material				Polyethylene Foam	Polyethylene Foam	Polyethylene Foam	Polyethylene Foam
Piping Connections	Liquid Pipes		mm	ϕ6.4 (Flare Connection)	ϕ6.4 (Flare Connection)	ϕ6.4 (Flare Connection)	ϕ9.5 (Flare Connection)
	Gas Pipes		mm	ϕ12.7 (Flare Connection)	ϕ12.7 (Flare Connection)	ϕ12.7 (Flare Connection)	ϕ15.9 (Flare Connection)
	Drain Pipe		mm	VP25 (External Dia. 32 / Internal Dia. 25)	VP25 (External Dia. 32 / Internal Dia. 25)	VP25 (External Dia. 32 / Internal Dia. 25)	VP25 (External Dia. 32 / Internal Dia. 25)
Machine Weight (Mass)			kg	31	31	31	34
∗5 Sound Level (H/L) (220V)			dBA	38/33	38/33	40/34	42/37
Safety Devices				Fuse. Thermal Fuse for Fan Motor.	Fuse. Thermal Fuse for Fan Motor.	Fuse. Thermal Fuse for Fan Motor.	Fuse. Thermal Fuse for Fan Motor.
Refrigerant Control				Electronic Expansion Valve	Electronic Expansion Valve	Electronic Expansion Valve	Electronic Expansion Valve
Connectable Outdoor Units				R-410A P Series	R-410A P Series	R-410A P Series	R-410A P Series
Decoration Panels (Option)	Model			BYK45FJW1	BYK45FJW1	BYK45FJW1	BYK71FJW1
	Panel Color			White (10Y9/0.5)	White (10Y9/0.5)	White (10Y9/0.5)	White (10Y9/0.5)
	Dimensions: (H×W×D)		mm	70×1,240×800	70×1,240×800	70×1,240×800	70×1,440×800
	Air Filter			Resin Net (with Mold Resistant)	Resin Net (with Mold Resistant)	Resin Net (with Mold Resistant)	Resin Net (with Mold Resistant)
	Weight		kg	8.5	8.5	8.5	9.5
Standard Accessories				Operation Manual. Installation Manual. Paper Pattern for Installation. Drain Hose. Clamp Metal. Insulation for Fitting. Sealing Pads. Clamps. Screws. Washers. Positioning Jig for Installation. Insulation for Hanger Bracket. Air Outlet Blocking Pad.	Operation Manual. Installation Manual. Paper Pattern for Installation. Drain Hose. Clamp Metal. Insulation for Fitting. Sealing Pads. Clamps. Screws. Washers. Positioning Jig for Installation. Insulation for Hanger Bracket. Air Outlet Blocking Pad.	Operation Manual. Installation Manual. Paper Pattern for Installation. Drain Hose. Clamp Metal. Insulation for Fitting. Sealing Pads. Clamps. Screws. Washers. Positioning Jig for Installation. Insulation for Hanger Bracket. Air Outlet Blocking Pad.	Operation Manual. Installation Manual. Paper Pattern for Installation. Drain Hose. Clamp Metal. Insulation for Fitting. Sealing Pads. Clamps. Screws. Washers. Positioning Jig for Installation. Insulation for Hanger Bracket. Air Outlet Blocking Pad.
Drawing No.				C : 3D038813A			

Note:

∗1 Indoor temp. : 27°CDB, 19.5°CWB / outdoor temp. : 35°CDB / Equivalent piping length : 7.5 m, level difference : 0 m.
∗2 Indoor temp. : 27°CDB, 19.0°CWB / outdoor temp. : 35°CDB / Equivalent piping length : 7.5 m, level difference : 0 m.
∗3 Indoor temp. : 20°CDB / outdoor temp. : 7°CDB, 6°CWB / Equivalent piping length : 7.5 m, level difference : 0 m.
4 Capacities are net, including a deduction for cooling (an addition for heating) for indoor fan motor heat.
∗5 Anechoic chamber conversion value, measured at a point 1 m in front of the unit and 1m downward. During actual operation, these values are normally somewhat higher as a result of ambient conditions.
6 Refer to page 98 for Fan Motor Input.

Conversion Formulae
kcal/h=kW×860 Btu/h=kW×3412 cfm=m³/min×35.3

3. Dimensions

FXKQ25MA + BYK45FJW1 (Decoration Panel)
FXKQ32MA + BYK45FJW1 (Decoration Panel)
FXKQ40MA + BYK45FJW1 (Decoration Panel)

Unit (mm)

C : 3D038840

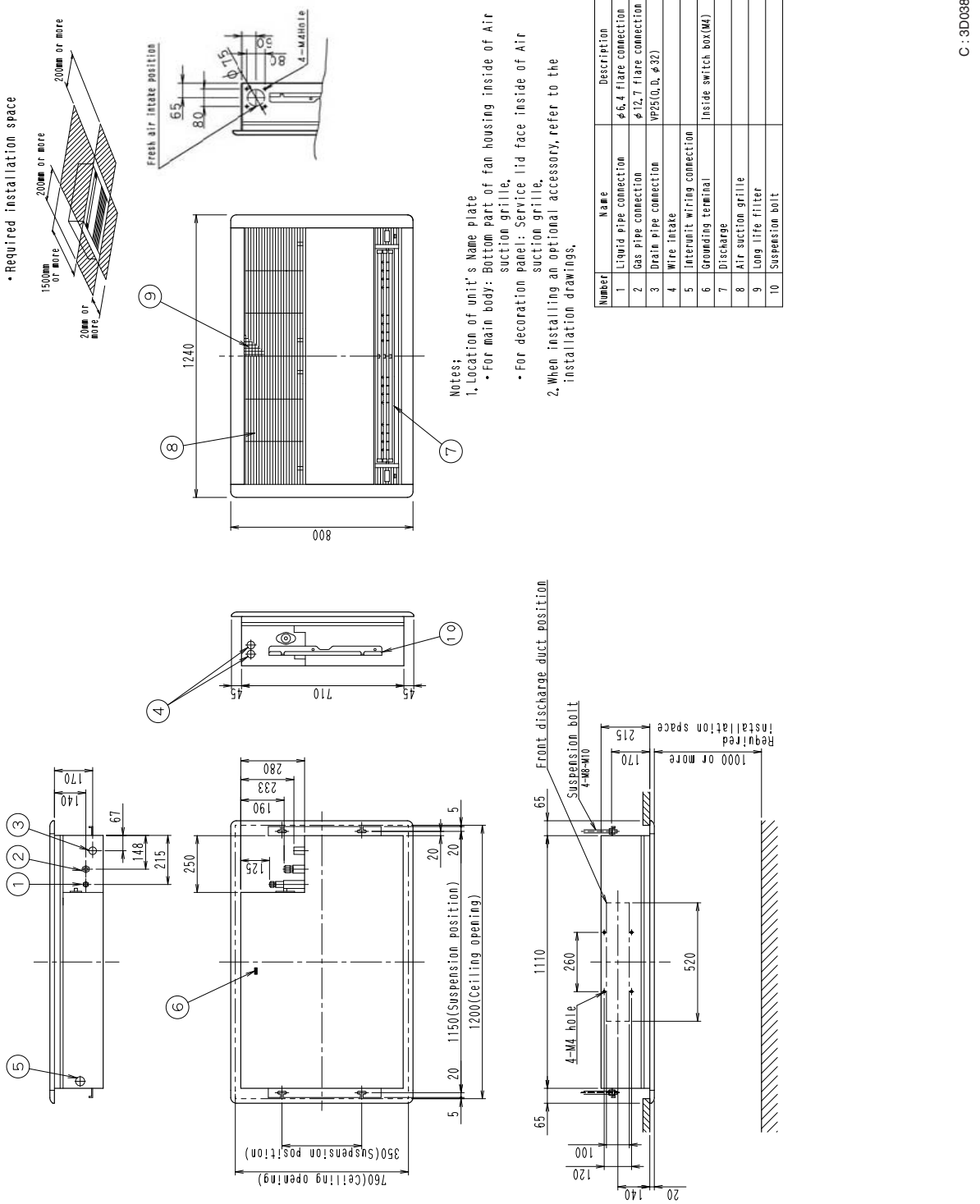

Notes;
1. Location of unit's Name plate
   • For main body: Bottom part of fan housing inside of Air suction grille.
   • For decoration panel: Service lid face inside of Air suction grille.
2. When installing an optional accessory, refer to the installation drawings.

Number	Name	Description
1	Liquid pipe connection	φ6.4 flare connection
2	Gas pipe connection	φ12.7 flare connection
3	Drain pipe connection	VP25(O.D. φ32)
4	Wire intake	
5	Interunit wiring connection	
6	Grounding terminal	Inside switch box(M4)
7	Discharge	
8	Air suction grille	
9	Long life filter	
10	Suspension bolt	

FXKQ63MA + BYK71FJW1 (Decoration Panel)

Unit (mm)

C : 3D038841

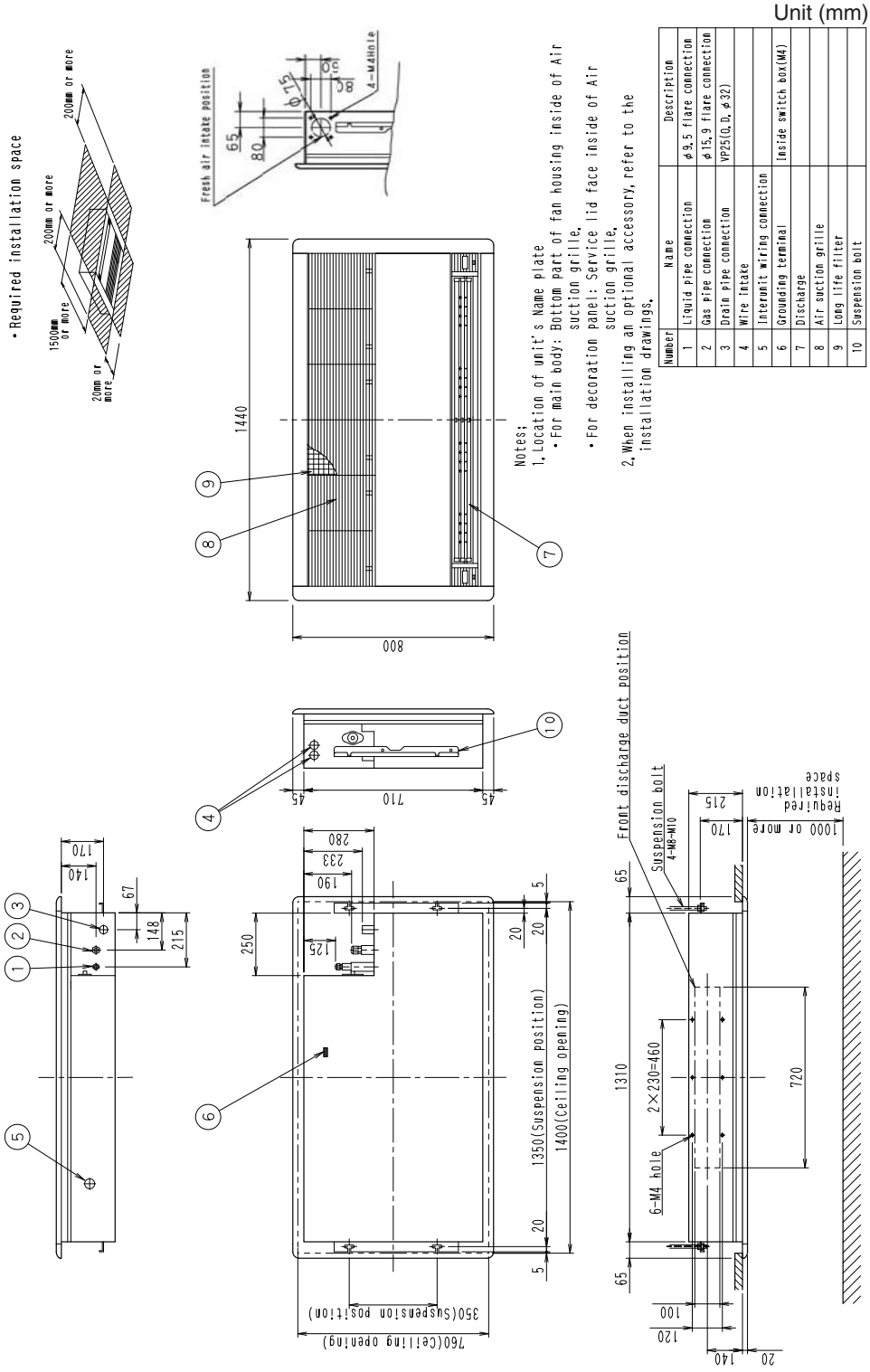

Number	Name	Description
1	Liquid pipe connection	φ9.5 flare connection
2	Gas pipe connection	φ15.9 flare connection
3	Drain pipe connection	VP25(O.D. φ32)
4	Wire intake	
5	Interunit wiring connection	
6	Grounding terminal	Inside switch box(M4)
7	Discharge	
8	Air suction grille	
9	Long life filter	
10	Suspension bolt	

4. Piping Diagrams

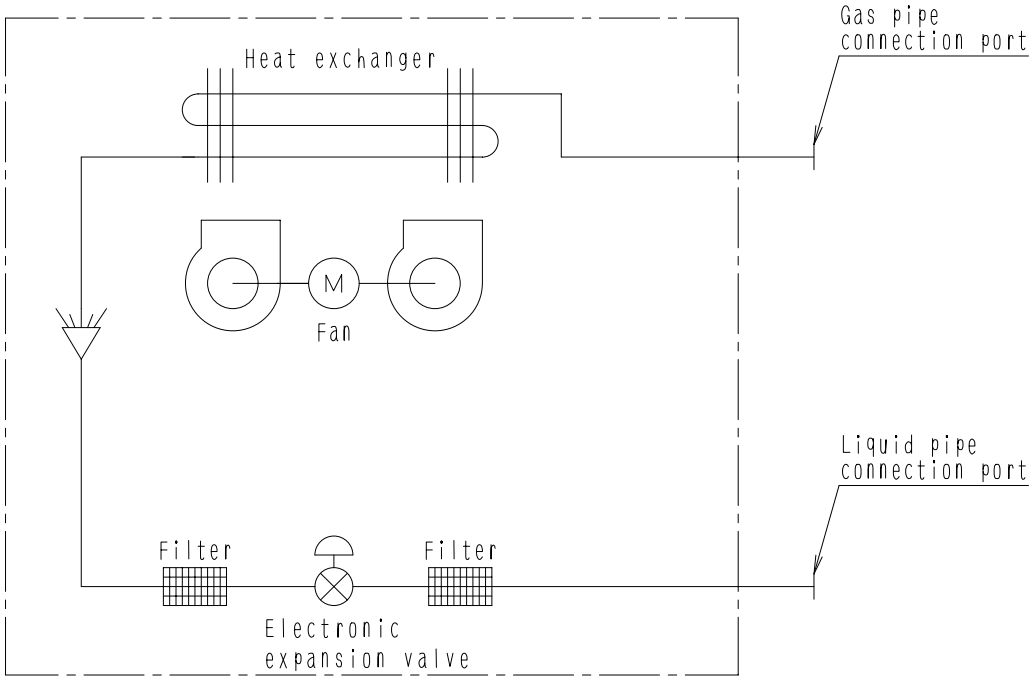

4D034245B

■ **Refrigerant pipe connection port diameters**

(mm)

Model	Gas	Liquid
FXKQ25 · 32 · 40MA	ϕ12.7	ϕ6.4
FXKQ63MA	ϕ15.9	ϕ9.5

5. Wiring Diagrams

FXKQ25 · 32 · 40 · 63MAVE

3D039564C

4

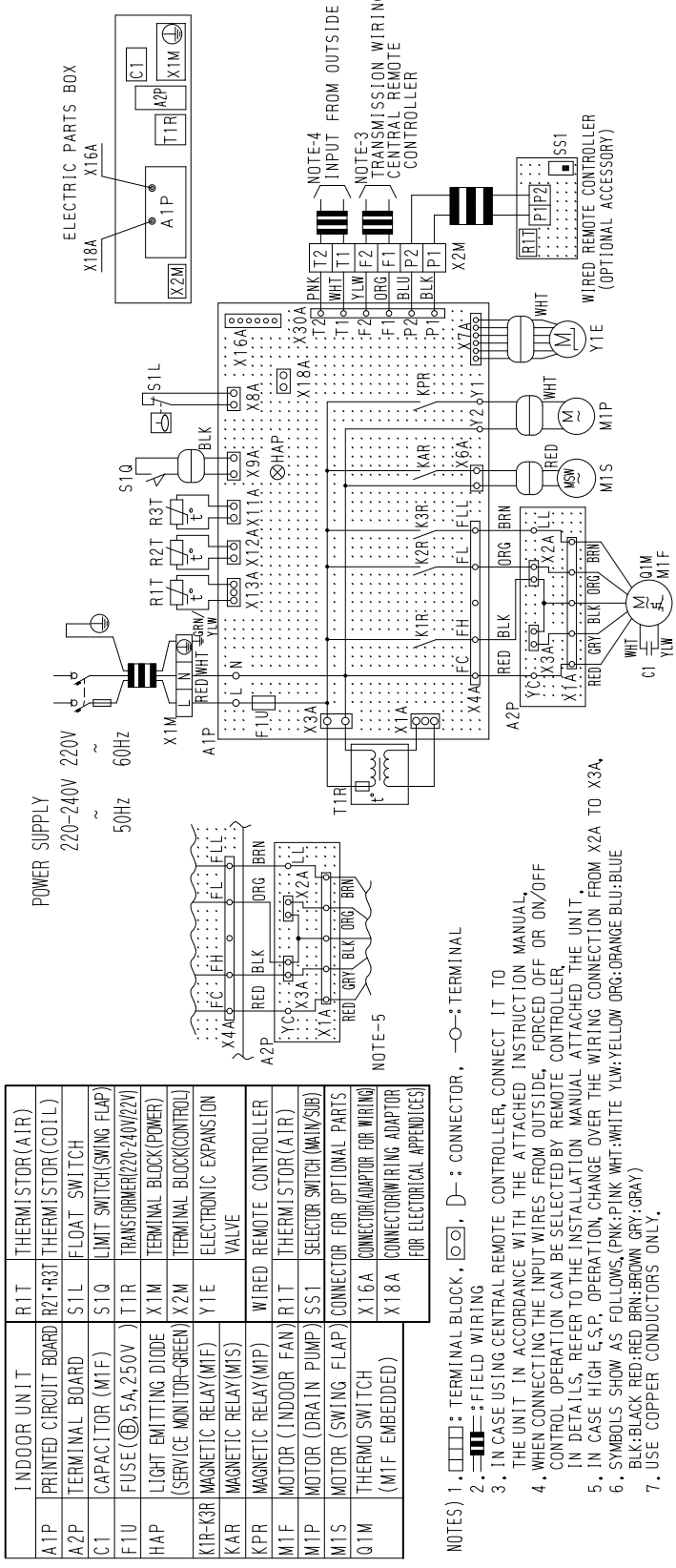

INDOOR UNIT		R1T	THERMISTOR(AIR)
A1P	PRINTED CIRCUIT BOARD	R2T·R3T	THERMISTOR(COIL)
A2P	TERMINAL BOARD	S1L	FLOAT SWITCH
C1	CAPACITOR (M1F)	S1Q	LIMIT SWITCH(SWING FLAP)
F1U	FUSE(Ⓑ,5A,250V)	T1R	TRANSFORMER(220-240V/22V)
HAP	LIGHT EMITTING DIODE (SERVICE MONITOR-GREEN)	X1M	TERMINAL BLOCK(POWER)
		X2M	TERMINAL BLOCK(CONTROL)
K1R-K3R	MAGNETIC RELAY(M1F)	Y1E	ELECTRONIC EXPANSION VALVE
KAR	MAGNETIC RELAY(M1S)		
KPR	MAGNETIC RELAY(M1P)		WIRED REMOTE CONTROLLER
M1F	MOTOR (INDOOR FAN)	R1T	THERMISTOR(AIR)
M1P	MOTOR (DRAIN PUMP)	SS1	SELECTOR SWITCH (MAIN/SUB)
M1S	MOTOR (SWING FLAP)		CONNECTOR FOR OPTIONAL PARTS
Q1M	THERMO SWITCH (M1F EMBEDDED)	X16A	CONNECTOR(ADAPTOR FOR WIRING)
		X18A	CONNECTOR(WIRING ADAPTOR FOR ELECTORICAL APPENDICES)

6. Electric Characteristics

Units					Power supply		IFM		Input(W)	
Model	Type	Hz	Volts	Voltage range	MCA	MFA	KW	FLA	Cooling	Heating
FXKQ25MA	VE	50	220-240	MAX. 264 Min. 198	0.3	15	0.015	0.2	66	46
FXKQ32MA					0.3	15	0.015	0.2	66	46
FXKQ40MA					0.3	15	0.020	0.2	76	56
FXKQ63MA					0.5	15	0.045	0.4	105	85
FXKQ25MA	VE	60	220	MAX. 242 Min. 198	0.4	15	0.015	0.3	69	49
FXKQ32MA					0.4	15	0.015	0.3	69	49
FXKQ40MA					0.5	15	0.020	0.4	92	72
FXKQ63MA					0.6	15	0.045	0.5	120	100

Symbols:

MCA : Min. Circuit Amps (A)
MFA : Max. Fuse Amps (See note 5)
KW : Fan Motor Rated Output(KW)
FLA : Full Load Amps(A)
IFM : Indoor Fan Motor

Note:

1. Voltage range

   Units are suitable for use on electrical systems where voltage supplied to unit terminals is not below or above listed range limits.

2. Maximum allowable voltage unbalance between phases is 2%.

3. MCA/MFA

   MCA = 1.25 X FLA

   MFA ≦ 4 X FLA

   (Next lower standard fuse rating. Min. 15A)

4. Select wire size based on the MCA.

5. Instead of fuse, use Circuit Breaker.

C : 4D037076B

7. Capacity Tables

7.1 Cooling Capacity

FXKQ-MA **[50/60Hz]**

Cooling capacity

Unit Size	Outdoor air temp. °CDB	Indoor air temp. 14.0°CWB 20°CDB TC	14.0°CWB 20°CDB SHC	16.0°CWB 23°CDB TC	16.0°CWB 23°CDB SHC	18.0°CWB 26°CDB TC	18.0°CWB 26°CDB SHC	19.0°CWB 27°CDB TC	19.0°CWB 27°CDB SHC	20.0°CWB 28°CDB TC	20.0°CWB 28°CDB SHC	22.0°CWB 30°CDB TC	22.0°CWB 30°CDB SHC	24.0°CWB 32°CDB TC	24.0°CWB 32°CDB SHC
25	10.0	1.9	1.9	2.3	2.2	2.6	2.3	2.8	2.4	3.0	2.5	3.4	2.5	3.7	2.5
	12.0	1.9	1.9	2.3	2.2	2.6	2.3	2.8	2.4	3.0	2.5	3.4	2.5	3.6	2.5
	14.0	1.9	1.9	2.3	2.2	2.6	2.3	2.8	2.4	3.0	2.5	3.4	2.5	3.6	2.5
	16.0	1.9	1.9	2.3	2.2	2.6	2.3	2.8	2.4	3.0	2.5	3.4	2.5	3.5	2.4
	18.0	1.9	1.9	2.3	2.2	2.6	2.3	2.8	2.4	3.0	2.5	3.4	2.5	3.5	2.4
	20.0	1.9	1.9	2.3	2.2	2.6	2.3	2.8	2.4	3.0	2.5	3.4	2.5	3.4	2.4
	21.0	1.9	1.9	2.3	2.2	2.6	2.3	2.8	2.4	3.0	2.5	3.4	2.5	3.4	2.4
	23.0	1.9	1.9	2.3	2.2	2.6	2.3	2.8	2.4	3.0	2.5	3.3	2.5	3.4	2.3
	25.0	1.9	1.9	2.3	2.2	2.6	2.3	2.8	2.4	3.0	2.5	3.3	2.5	3.3	2.3
	27.0	1.9	1.9	2.3	2.2	2.6	2.3	2.8	2.4	3.0	2.5	3.2	2.4	3.2	2.3
	29.0	1.9	1.9	2.3	2.2	2.6	2.3	2.8	2.4	3.0	2.5	3.2	2.4	3.2	2.3
	31.0	1.9	1.9	2.3	2.2	2.6	2.3	2.8	2.4	3.0	2.5	3.1	2.4	3.2	2.3
	33.0	1.9	1.9	2.3	2.2	2.6	2.3	2.8	2.4	3.0	2.5	3.1	2.4	3.1	2.3
	35.0	1.9	1.9	2.3	2.2	2.6	2.3	2.8	2.4	3.0	2.5	3.0	2.4	3.1	2.3
	37.0	1.9	1.9	2.3	2.2	2.6	2.3	2.8	2.4	2.9	2.5	2.9	2.3	3.0	2.3
	39.0	1.9	1.9	2.3	2.2	2.6	2.3	2.8	2.4	2.9	2.5	2.9	2.3	3.0	2.2
32	10.0	2.4	2.2	2.9	2.5	3.4	2.6	3.6	2.7	3.8	2.9	4.3	2.9	4.7	2.9
	12.0	2.4	2.2	2.9	2.5	3.4	2.6	3.6	2.7	3.8	2.9	4.3	2.9	4.7	2.9
	14.0	2.4	2.2	2.9	2.5	3.4	2.6	3.6	2.7	3.8	2.9	4.3	2.9	4.6	2.9
	16.0	2.4	2.2	2.9	2.5	3.4	2.6	3.6	2.7	3.8	2.9	4.3	2.9	4.6	2.8
	18.0	2.4	2.2	2.9	2.5	3.4	2.6	3.6	2.7	3.8	2.9	4.3	2.9	4.5	2.8
	20.0	2.4	2.2	2.9	2.5	3.4	2.6	3.6	2.7	3.8	2.9	4.3	2.9	4.4	2.8
	21.0	2.4	2.2	2.9	2.5	3.4	2.6	3.6	2.7	3.8	2.9	4.3	2.9	4.4	2.7
	23.0	2.4	2.2	2.9	2.5	3.4	2.6	3.6	2.7	3.8	2.9	4.2	2.9	4.3	2.7
	25.0	2.4	2.2	2.9	2.5	3.4	2.6	3.6	2.7	3.8	2.9	4.2	2.8	4.3	2.7
	27.0	2.4	2.2	2.9	2.5	3.4	2.6	3.6	2.7	3.8	2.9	4.1	2.8	4.2	2.7
	29.0	2.4	2.2	2.9	2.5	3.4	2.6	3.6	2.7	3.8	2.9	4.1	2.8	4.2	2.6
	31.0	2.4	2.2	2.9	2.5	3.4	2.6	3.6	2.7	3.8	2.9	4.0	2.7	4.1	2.6
	33.0	2.4	2.2	2.9	2.5	3.4	2.6	3.6	2.7	3.8	2.9	3.9	2.7	4.0	2.6
	35.0	2.4	2.2	2.9	2.5	3.4	2.6	3.6	2.7	3.8	2.9	3.9	2.7	4.0	2.6
	37.0	2.4	2.2	2.9	2.5	3.4	2.6	3.6	2.7	3.7	2.8	3.8	2.7	3.9	2.6
	39.0	2.4	2.2	2.9	2.5	3.4	2.6	3.6	2.7	3.7	2.8	3.8	2.7	3.8	2.6
40	10.0	3.0	2.6	3.6	2.8	4.2	3.2	4.5	3.2	4.8	3.3	5.4	3.5	5.9	3.5
	12.0	3.0	2.6	3.6	2.8	4.2	3.2	4.5	3.2	4.8	3.3	5.4	3.5	5.8	3.5
	14.0	3.0	2.6	3.6	2.8	4.2	3.2	4.5	3.2	4.8	3.3	5.4	3.5	5.8	3.4
	16.0	3.0	2.6	3.6	2.8	4.2	3.2	4.5	3.2	4.8	3.3	5.4	3.5	5.7	3.4
	18.0	3.0	2.6	3.6	2.8	4.2	3.2	4.5	3.2	4.8	3.3	5.4	3.5	5.6	3.3
	20.0	3.0	2.6	3.6	2.8	4.2	3.2	4.5	3.2	4.8	3.3	5.4	3.5	5.5	3.3
	21.0	3.0	2.6	3.6	2.8	4.2	3.2	4.5	3.2	4.8	3.3	5.4	3.5	5.5	3.3
	23.0	3.0	2.6	3.6	2.8	4.2	3.2	4.5	3.2	4.8	3.3	5.3	3.4	5.4	3.2
	25.0	3.0	2.6	3.6	2.8	4.2	3.2	4.5	3.2	4.8	3.3	5.2	3.3	5.3	3.2
	27.0	3.0	2.6	3.6	2.8	4.2	3.2	4.5	3.2	4.8	3.3	5.2	3.3	5.3	3.2
	29.0	3.0	2.6	3.6	2.8	4.2	3.2	4.5	3.2	4.8	3.3	5.1	3.3	5.2	3.1
	31.0	3.0	2.6	3.6	2.8	4.2	3.2	4.5	3.2	4.8	3.3	5.0	3.2	5.1	3.1
	33.0	3.0	2.6	3.6	2.8	4.2	3.2	4.5	3.2	4.8	3.3	4.9	3.2	5.0	3.1
	35.0	3.0	2.6	3.6	2.8	4.2	3.2	4.5	3.2	4.7	3.3	4.9	3.2	5.0	3.0
	37.0	3.0	2.6	3.6	2.8	4.2	3.2	4.5	3.2	4.7	3.2	4.8	3.1	4.9	3.0
	39.0	3.0	2.6	3.6	2.8	4.2	3.2	4.5	3.2	4.6	3.2	4.7	3.1	4.8	3.0
63	10.0	4.8	4.0	5.7	4.5	6.6	5.0	7.1	5.1	7.6	5.2	8.5	5.4	9.3	5.6
	12.0	4.8	4.0	5.7	4.5	6.6	5.0	7.1	5.1	7.6	5.2	8.5	5.4	9.2	5.5
	14.0	4.8	4.0	5.7	4.5	6.6	5.0	7.1	5.1	7.6	5.2	8.5	5.4	9.1	5.4
	16.0	4.8	4.0	5.7	4.5	6.6	5.0	7.1	5.1	7.6	5.2	8.5	5.4	9.0	5.3
	18.0	4.8	4.0	5.7	4.5	6.6	5.0	7.1	5.1	7.6	5.2	8.5	5.4	8.8	5.3
	20.0	4.8	4.0	5.7	4.5	6.6	5.0	7.1	5.1	7.6	5.2	8.5	5.4	8.7	5.2
	21.0	4.8	4.0	5.7	4.5	6.6	5.0	7.1	5.1	7.6	5.2	8.5	5.4	8.7	5.2
	23.0	4.8	4.0	5.7	4.5	6.6	5.0	7.1	5.1	7.6	5.2	8.4	5.3	8.5	5.1
	25.0	4.8	4.0	5.7	4.5	6.6	5.0	7.1	5.1	7.6	5.2	8.3	5.3	8.4	5.0
	27.0	4.8	4.0	5.7	4.5	6.6	5.0	7.1	5.1	7.6	5.2	8.1	5.2	8.3	5.0
	29.0	4.8	4.0	5.7	4.5	6.6	5.0	7.1	5.1	7.6	5.2	8.0	5.1	8.2	4.9
	31.0	4.8	4.0	5.7	4.5	6.6	5.0	7.1	5.1	7.6	5.2	7.9	5.1	8.1	4.9
	33.0	4.8	4.0	5.7	4.5	6.6	5.0	7.1	5.1	7.6	5.2	7.8	5.0	7.9	4.8
	35.0	4.8	4.0	5.7	4.5	6.6	5.0	7.1	5.1	7.5	5.2	7.7	5.0	7.8	4.8
	37.0	4.8	4.0	5.7	4.5	6.6	5.0	7.1	5.1	7.4	5.1	7.5	4.9	7.7	4.8
	39.0	4.8	4.0	5.7	4.5	6.6	5.0	7.1	5.1	7.2	5.0	7.4	4.9	7.6	4.7

TC Total capacity ; kW
SHC Sensible heat capacity ; kW

Refer to Outdoor Unit Capacity Tables : on page 339~, for the actual performance data of each indoor and outdoor unit combination.

7.2 Heating Capacity

FXKQ-MA **[50/60Hz]**

Heating capacity

Unit Size	Outdoor air temp. °CDB	Outdoor air temp. °CWB	Indoor air temp. °CDB 16.0 kW	18.0 kW	20.0 kW	21.0 kW	22.0 kW	24.0 kW
25	-19.8	-20.0	1.9	1.9	1.9	1.9	1.9	1.9
	-18.8	-19.0	1.9	1.9	1.9	1.9	1.9	1.9
	-16.7	-17.0	2.1	2.1	2.0	2.0	2.0	2.0
	-14.7	-15.0	2.2	2.2	2.2	2.2	2.2	2.1
	-12.6	-13.0	2.3	2.3	2.3	2.3	2.3	2.3
	-10.5	-11.0	2.4	2.4	2.4	2.4	2.4	2.4
	-9.5	-10.0	2.5	2.4	2.4	2.4	2.4	2.4
	-8.5	-9.1	2.5	2.5	2.5	2.5	2.5	2.5
	-7.0	-7.6	2.6	2.6	2.6	2.6	2.6	2.6
	-5.0	-5.6	2.7	2.7	2.7	2.7	2.7	2.7
	-3.0	-3.7	2.8	2.8	2.8	2.8	2.8	2.8
	0.0	-0.7	3.0	3.0	3.0	3.0	3.0	2.8
	3.0	2.2	3.1	3.1	3.2	3.1	3.0	2.8
	5.0	4.1	3.3	3.2		3.1	3.0	2.8
	7.0	6.0	3.4	3.4	3.2	3.1	3.0	2.8
	9.0	7.9	3.5	3.4	3.2	3.1	3.0	2.8
	11.0	9.8	3.6	3.4	3.2	3.1	3.0	2.8
	13.0	11.8	3.6	3.4	3.2	3.1	3.0	2.8
	15.0	13.7	3.6	3.4	3.2	3.1	3.0	2.8
32	-19.8	-20.0	2.4	2.4	2.3	2.3	2.3	2.3
	-18.8	-19.0	2.4	2.4	2.4	2.4	2.4	2.4
	-16.7	-17.0	2.6	2.6	2.6	2.6	2.6	2.5
	-14.7	-15.0	2.7	2.7	2.7	2.7	2.7	2.7
	-12.6	-13.0	2.9	2.8	2.8	2.8	2.8	2.8
	-10.5	-11.0	3.0	3.0	3.0	3.0	3.0	3.0
	-9.5	-10.0	3.1	3.1	3.1	3.1	3.1	3.0
	-8.5	-9.1	3.1	3.1	3.1	3.1	3.1	3.1
	-7.0	-7.6	3.2	3.2	3.2	3.2	3.2	3.2
	-5.0	-5.6	3.4	3.4	3.4	3.4	3.4	3.4
	-3.0	-3.7	3.5	3.5	3.5	3.5	3.5	3.5
	0.0	-0.7	3.7	3.7	3.7	3.7	3.7	3.5
	3.0	2.2	3.9	3.9	3.9	3.9	3.7	3.5
	5.0	4.1	4.1	4.1	4.0	3.9	3.7	3.5
	7.0	6.0	4.2	4.2	4.0	3.9	3.7	3.5
	9.0	7.9	4.3	4.3	4.0	3.9	3.7	3.5
	11.0	9.8	4.5	4.3	4.0	3.9	3.7	3.5
	13.0	11.8	4.5	4.3	4.0	3.9	3.7	3.5
	15.0	13.7	4.5	4.3	4.0	3.9	3.7	3.5
40	-19.8	-20.0	3.0	2.9	2.9	2.9	2.9	2.9
	-18.8	-19.0	3.0	3.0	3.0	3.0	3.0	3.0
	-16.7	-17.0	3.2	3.2	3.2	3.2	3.2	3.2
	-14.7	-15.0	3.4	3.4	3.4	3.4	3.4	3.4
	-12.6	-13.0	3.6	3.6	3.6	3.5	3.5	3.5
	-10.5	-11.0	3.7	3.7	3.7	3.7	3.7	3.7
	-9.5	-10.0	3.8	3.8	3.8	3.8	3.8	3.8
	-8.5	-9.1	3.9	3.9	3.9	3.9	3.9	3.9
	-7.0	-7.6	4.0	4.0	4.0	4.0	4.0	4.0
	-5.0	-5.6	4.2	4.2	4.2	4.2	4.2	4.2
	-3.0	-3.7	4.4	4.4	4.4	4.4	4.4	4.4
	0.0	-0.7	4.7	4.6	4.6	4.6	4.7	4.4
	3.0	2.2	4.9	4.9	4.9	4.8	4.7	4.4
	5.0	4.1	5.1	5.1	5.0	4.8	4.7	4.4
	7.0	6.0	5.2	5.2		4.8	4.7	4.4
	9.0	7.9	5.4	5.3	5.0	4.8	4.7	4.4
	11.0	9.8	5.6	5.3	5.0	4.8	4.7	4.4
	13.0	11.8	5.6	5.3	5.0	4.8	4.7	4.4
	15.0	13.7	5.6	5.3	5.0	4.8	4.7	4.4
63	-19.8	-20.0	4.7	4.7	4.7	4.7	4.7	4.7
	-18.8	-19.0	4.9	4.9	4.8	4.8	4.8	4.8
	-16.7	-17.0	5.1	5.1	5.1	5.1	5.1	5.1
	-14.7	-15.0	5.4	5.4	5.4	5.4	5.4	5.4
	-12.6	-13.0	5.7	5.7	5.7	5.7	5.7	5.7
	-10.5	-11.0	6.0	6.1	6.0	6.1	6.0	5.9
	-9.5	-10.0	6.1	6.1	6.1	6.1	6.1	6.1
	-8.5	-9.1	6.3	6.3	6.2	6.2	6.2	6.2
	-7.0	-7.6	6.5	6.5	6.4	6.4	6.4	6.4
	-5.0	-5.6	6.8	6.7	6.7	6.7	6.7	6.7
	-3.0	-3.7	7.0	7.0	7.0	7.0	7.0	7.0
	0.0	-0.7	7.5	7.4	7.4	7.4	7.4	7.0
	3.0	2.2	7.9	7.8	7.8	7.7	7.5	7.0
	5.0	4.1	8.1	8.1	8.0	7.7	7.5	7.0
	7.0	6.0	8.4	8.4	8.0	7.7	7.5	7.0
	9.0	7.9	8.7	8.5	8.0	7.7	7.5	7.0
	11.0	9.8	8.9	8.5	8.0	7.7	7.5	7.0
	13.0	11.8	9.0	8.5	8.0	7.7	7.5	7.0
	15.0	13.7	9.0	8.5	8.0	7.7	7.5	7.0

Refer to Outdoor Unit Capacity Tables : on page 342–, for the actual performance data of each indoor and outdoor unit combination.

8. Air Velocity and Temperature Distributions (Reference Data)

FXKQ63MA

(Heating · Air Velocity Distribution)

Lower Air Flow

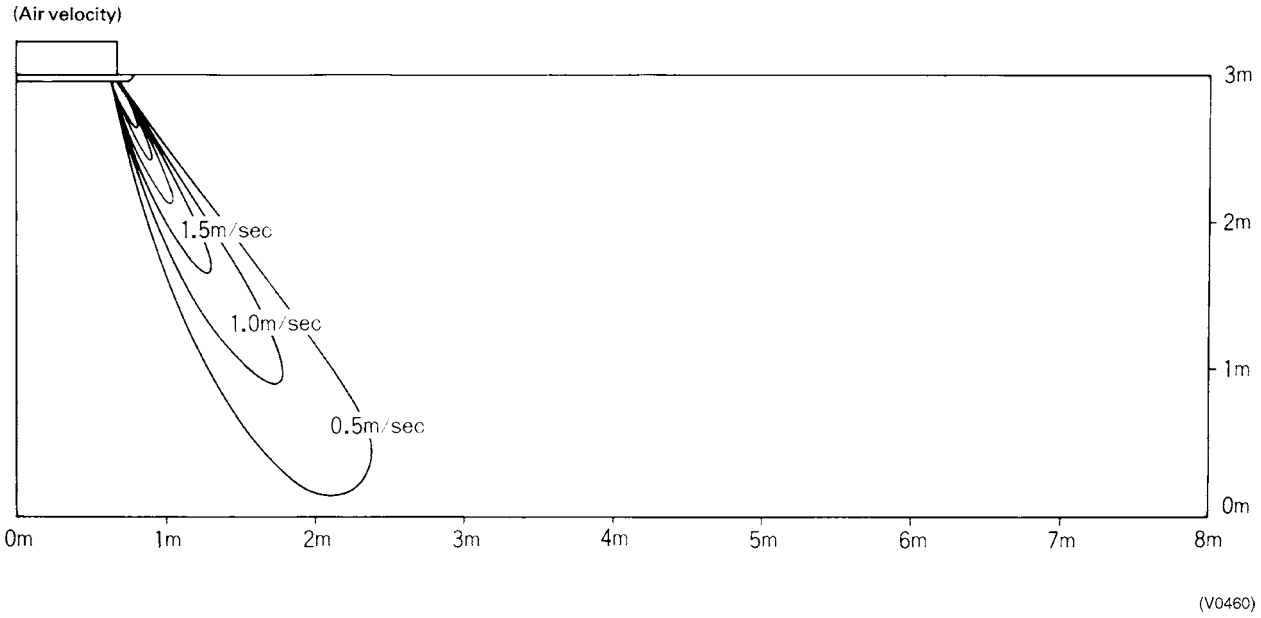

FXKQ63MA

(Heating · Temperature Distribution)

Lower Air Flow

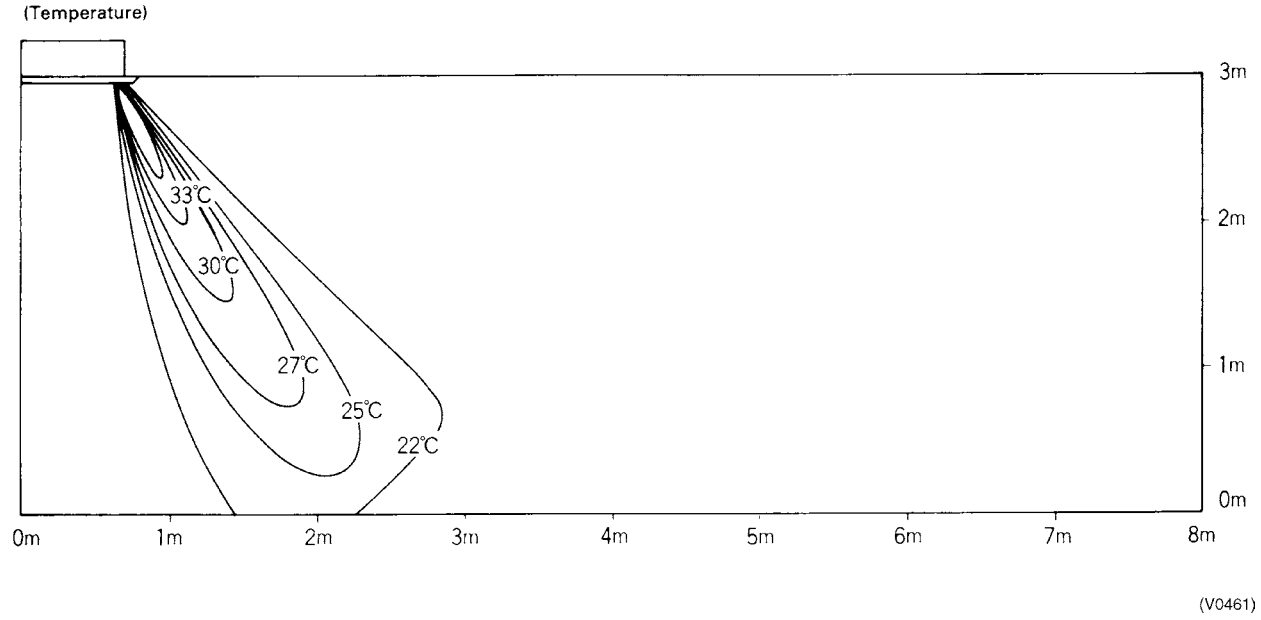

Note:

The corner type is applicable on a high ceiling. The standard setup height is 3 m. Shown here is the measurement distribution at the ceiling height of 3 m.

9. Sound Levels

Overall

■ **Ceiling Mounted Cassette Corner Type**

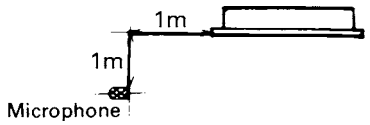

(V0473)

Note:
1. The operating conditions are assumed to be standard (JIS conditions).
2. These operating values were obtained in a dead room (conversion values).
   Sound level will vary depending on a range of factors such as the construction (acoustic absorption coefficient) of the particular room in which the equipments installed.

dBA

Model	220V, 50/60Hz		240V, 50Hz	
	H	L	H	L
FXKQ25MA FXKQ32MA	38	33	40	35
FXKQ40MA	40	34	42	36
FXKQ63MA	42	37	44	39

Octave Band Level

○———○ 220V 50/60Hz
○- - - -○ 240V 50Hz

FXKQ25 · 32MAVE

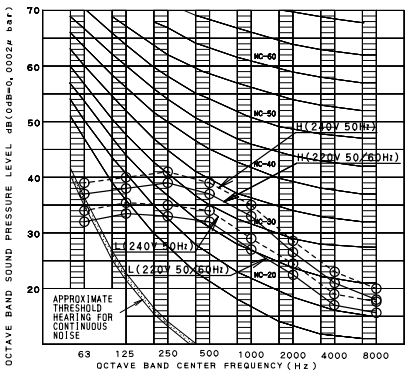

4D037071

FXKQ40MAVE

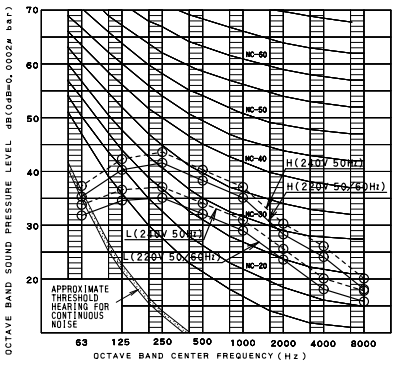

4D037072

FXKQ63MAVE

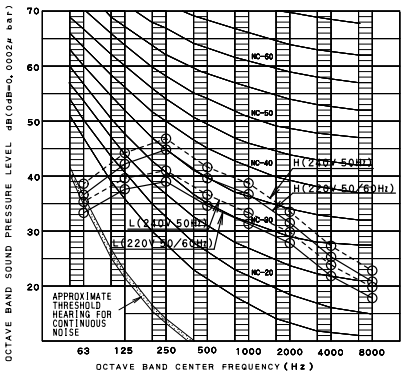

4D037073

10. Installation

Center of Gravity

Unit (mm)

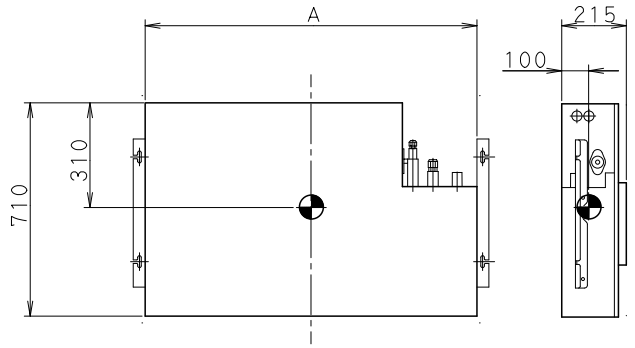

MODEL	A
FXKQ25・32・40MAVE	1110
FXKQ63MAVE	1310

C : 4D037079A

Service Space

Unit (mm)

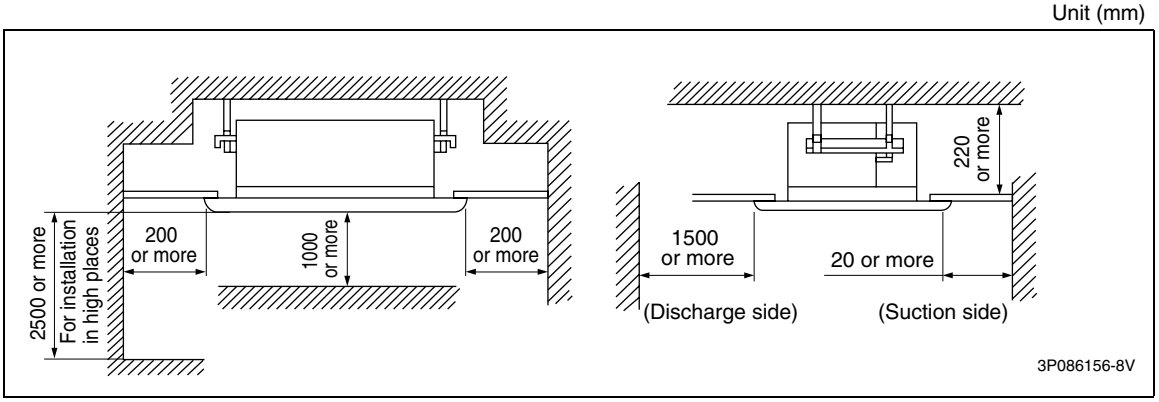

Note:
Above figure means minimum value. Please keep these value at least.

Bolt Pitch

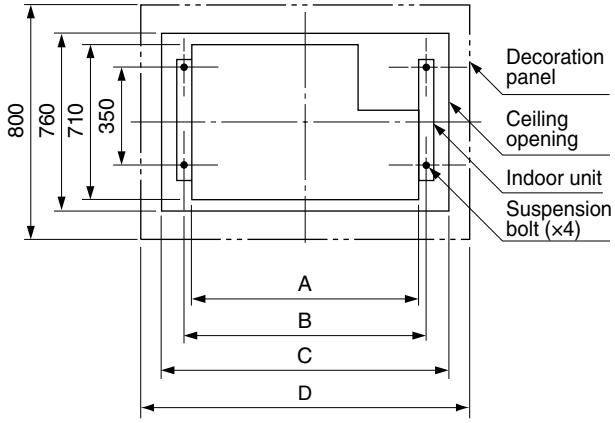

Model	A	B	C	D
FXKQ25 · 32 · 40MAVE	1110	1150	1200	1240
FXKQ63MAVE	1310	1350	1400	1440

3P086156-8V

Drain Pump Kit

Indoor unit	Drain pump kit
FXKQ-MA	Standard (Equipped with indoor unit)

Drain Piping Work

〈〈**Rig the drain pipe as shown below and take measures against condensation. Improperly rigged piping could lead to leaks and eventually wet furniture and belongings.**〉〉

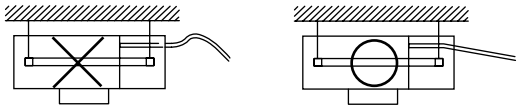

(1) Carry out the drain piping.

- Keep piping as short as possible and slope it downwards so that air may not remain trapped inside the pipe.
- The diameter of the drain pipe should be greater than or equal to the diameter of the connecting pipe (vinyl tube; pipe size : 25 mm ; outer dimension : 32 mm).
- Use the drain hose and metal clamp. Insert the drain hose into the drain socket, up to the white tape. Tighten the metal clamp until the screw head is less than 4 mm from the hose.

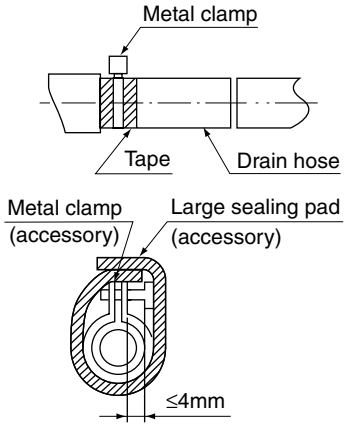

CAUTION

Setting the unit at an angle opposite to the drain piping might cause leaks.

- Wrap the sealing pad over the clamp and drain hose to insulate.
- Insulate the drain hose inside the building.
  While referring to the figure on the right, insulate the clamp and drain hose with the large sealing pad.
- If the drain hose cannot be sufficiently set on a slope, execute the drain raising piping.
- Secure a downward gradient of 1 / 100 or more for the drain pipe. To accomplish this, mount supporting brackets at an interval of 1 - 1.5 m.

〈**Precautions when doing drain-up piping work.**〉

- Make sure the drain-up piping is at most 330 mm high.
- Stand the drain-up piping horizontally, and make sure it is not further than 300 mm from the base of the drain socket.

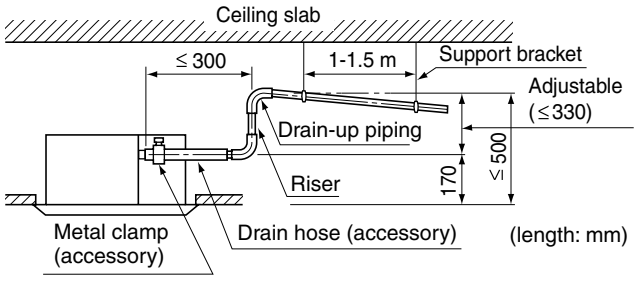

- Use the following outline if laying concentrated drain piping.
- If converging multiple drain pipes, install according to the procedure shown below.

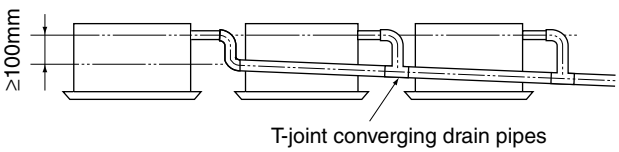

Select converging drain pipes whose gauge is suitable for the operating capacity of the unit.

3P086156-8V

(2) After piping work is finished, check drainage flows smoothly.
- Open the inspection opening, add approximately 1liter of water slowly into the drain pan and check drainage flow.

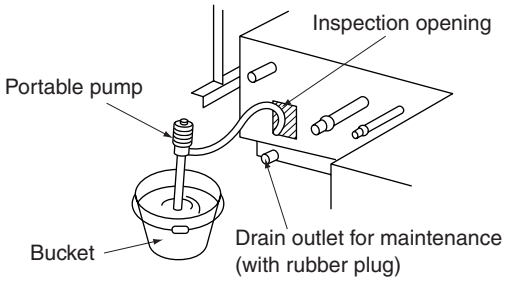

NOTE
- Use the drain outlet for maintenance to drain water from the drain pan.

WHEN ELECTRIC WIRING WORK IS FINISHED
- Check drainage flow during COOL running, explained under “TEST OPERATION”.

WHEN ELECTRIC WIRING WORK IS NOT FINISHED
- Remove the electric parts box lid, connect a power supply and remote controller to the terminals. (Refer to the **HOW TO CONNECT WIRINGS**)

Be sure attach the electric parts box lid before turning on the power.
Next, press the inspection/test operation button “ TEST ” on the remote controller. The unit will engage the test operation mode. Press the operation mode selector button “ ” until selecting FAN OPERATION “ ”. Then, press the ON/OFF button “ ”. The indoor unit fan and drain pump will start up. Check that the water has drained from the unit. Press “ TEST ” to go back to the first mode.

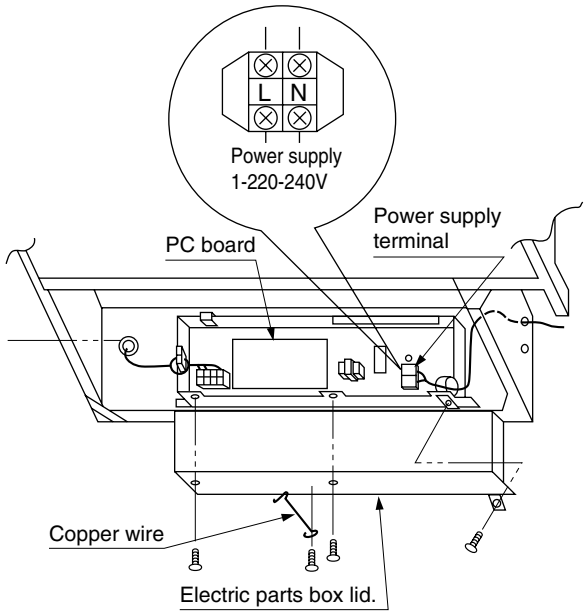

CAUTION
- Drain piping connections
  Do not connect the drain piping directly to sewage pipes that smell of ammonia. The ammonia in the sewage might enter the indoor unit through the drain pipes and corrode the heat exchanger.
- Keep in mind that it will become the cause of getting drain pipe blocked if water collects on drain pipe.

3P086156-8V

11. Accessories

Standard Accessories

FXKQ25~63MA

Name	Metal clamp	Paper pattern for installation	Drain hose	Insulation for fitting	Sealing pad	Insulation for hanger bracket
Quantity	1pc.	1 pc.	1 pc.	1 each.	1 each.	4 pcs.
Shape	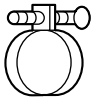	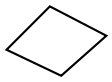 Corrugated cardboard		For gas pipe 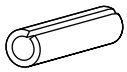 For liquid pipe 	Large 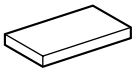 Small 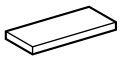	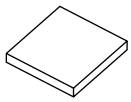

Name	Washer for hanging bracket	Clamp	Positioning jig for installation	Air outlet blocking pad	
Quantity	8 pcs.	8 pcs.	2 each.	1 pc.	
Shape			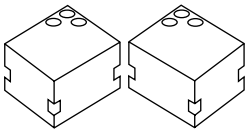 4 screws	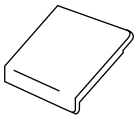	(Other) • Operation manual • Installation manual

• Screws for fixing panels are attached to decoration panel.

3P086156-8V

Optional Accessories (For Unit)

Item	Type	FXKQ25MA FXKQ32MA FXKQ40MA	FXKQ63MA
Panel related	Decoration panel	BYK45FJW1	BYK71FJW1
	Long life replacement filter	KAFJ521F56	KAFJ521F80
Air inlet and air discharge outlet related	Air discharge grill	K-HV7AW	K-HV9AW
	Air discharge blind panel	KDBJ52F56W	KDBJ52F80W
	Panel spacer	KPBJ52F56W	KPBJ52F80W
	Flexible duct (with shutter)	KFDJ52FA56	KFDJ52FA80

C : 3D037081A

Optional Accessories (For Controls) : Refer to P.375

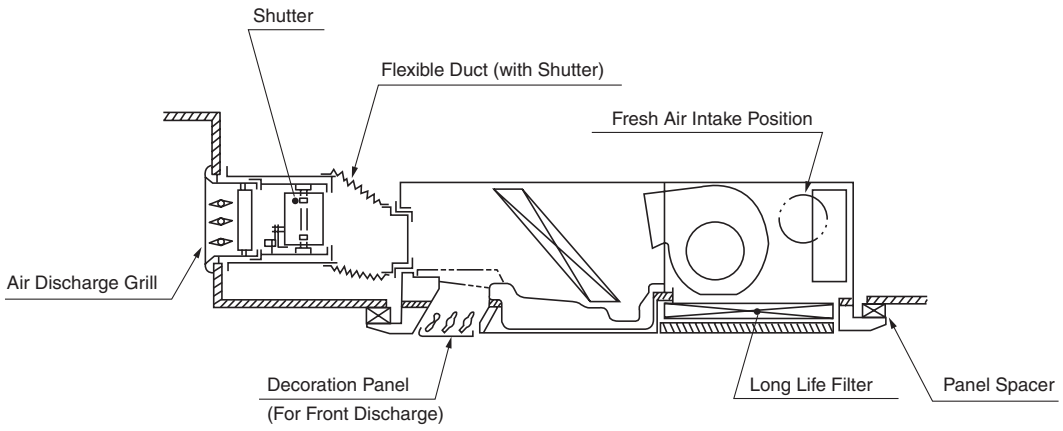

(V0678)

Panel Spacer

If the space above the ceiling is not available for more than 220 mm, use the panel spacer, which enables to install the unit in 200 mm space.

Specifications

Item \ Model		KPBJ52F56W	KPBJ52F80W
Color		White	
Dimensions (mm)	Height	20	
	Width	1,240	1,440
	Depth	800	
Materials		Outer Frame : Resin Molding Thermal Insulation : Foam Polyethylene	
Contents		Panel Spacer(1)(2)(3) Thermal Insulation (1)(2), Screws	
Applicable Decoration Panel		BYK45FJW1	BYK71FJW1
Applicable Model		For Indoor Unit 25·32·40 Class	For Indoor Unit 63 Class

Installation

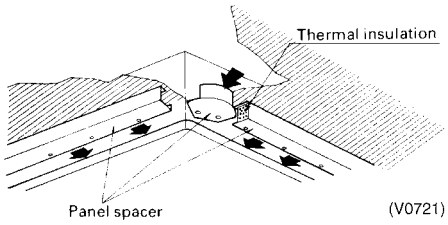

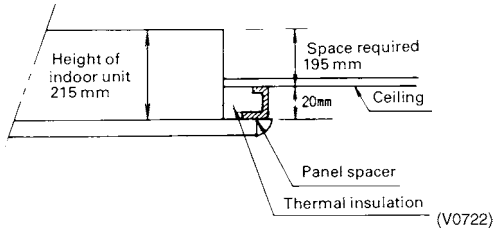

Precaution at use

1. Be sure to stick insulators on the panel spacer after the panel spacer is assembled.
2. Secure 20 cm height in the space above ceiling.

Contents of Kit

Prior to installation check whether you have the complete kit of parts as shown below including the installation manual.

Name	Panel spacer (1)	Panel spacer (2)	Panel spacer (3)	Thermal insulation (1)
Quantity	2 pieces	2 pieces	4 pieces	2 pieces
Shape				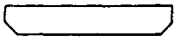

Name	Thermal insulation (2)	Screws	Installation manual
Quantity	2 pieces	18 pieces	1 piece
Shape	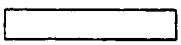	 M4×12	

(V0920)

Long Life Replacement Filter

Specifications

Items \ Model	KAFJ521F56	KAFJ521F80
Life Time, Average Efficiency	2,500 hours (dust density 0.15 mg/m³), 45% (Gravity method)	
Filter	Mildew Proof Resin Net	Mildew Proof Resin Net
Required Quantity (for One Unit)	Two pieces	Two pieces
Applicable Models	25 · 32 · 40 Class	63 Class

Dimensions

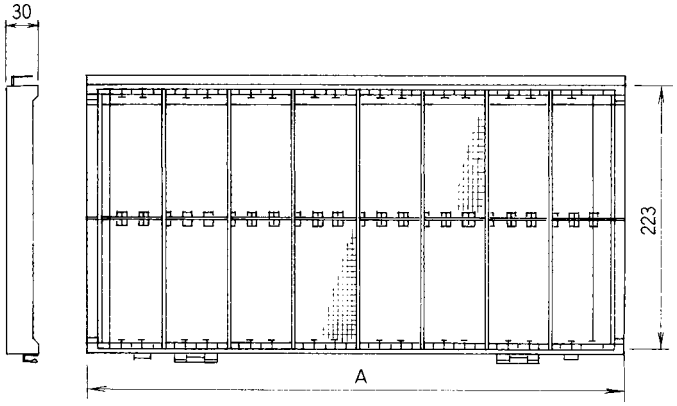

Model	A
KAFJ521F56	403
KAFJ521F80	503

JC : D3K1145A

Discharge Grille

This optional kit is used when the unit is installed with front air discharge. The direction of air can be adjusted flexibly. This discharge grille should be installed with the following flexible duct.

Specifications

Items \ Model	K-HV7AW	K-HV9AW
Air Flow Rate (m³/min)	5~12	7~17
Type	HV type (Horizontal blade and vertical blade movable)	
External Color	White	White
Materials	Steel plate (A cryptomeria only at the tip of the outlet + nylon flocking)	
Structural Parts	Discharge grille, Screws, Blade control tool	
Applicable Flexible Duct	KFDJ52F56	KFDJ52F80
Applicable Models	25 · 32 · 40 Class	63 Class

Dimension

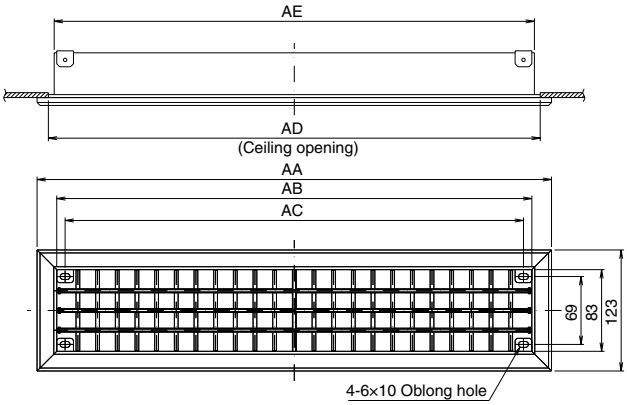

Model	AA	AB	AC	AD	AE
K–HV7AW	523	483	466	500	488
K–HV9AW	723	683	666	700	688

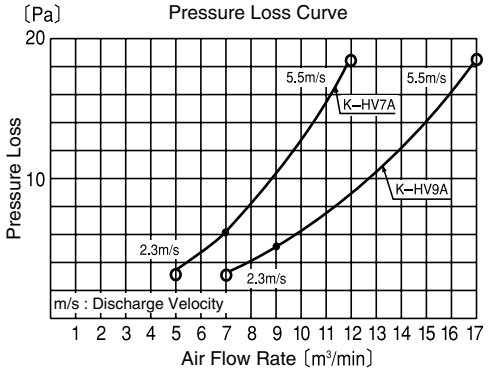

JC : D3K1972C

Flexible Duct (with Shutter)

The built-in shutter's Open/Shut action makes it possible to regulate the air flow rate. Besides, the flexible duct helps the connection to the main unit to give more flexibility.

Specifications

Items \ Model		KFDJ52FA56	KFDJ52FA80
External Dimension (mm)	H	132	
	W	532	732
	D	Max. 353	
Materials		Outer frame : Steel plate Flexible Duct : Glass wool, Vinyl chloride sheet	
Contents		Flexible duct, Shutter, Duct's set plate, Insulator, Outlet seal pad, Set screw, Shutter Open/shut tool, Blade adjusting tool	
Applicable Models		25 · 32 · 40 Class	63 Class

Precaution at use

Be sure to seal out the opening of the drain pan with drain outlet seal materials after the front panel of the indoor unit is removed away.

Dimensions

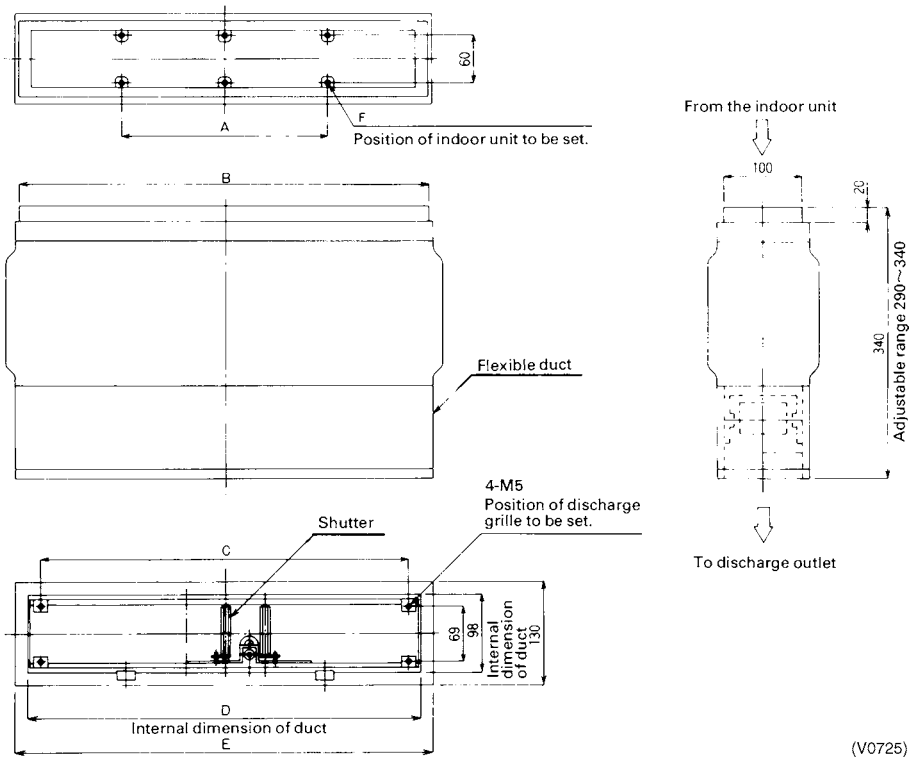

Model	Applicable Model	A	B	C	D	E	F
KFDJ52FA56	For Indoor Unit 25~40 Class	260	520	466	498	530	4-ϕ Hole
KFDJ52FA80	For Indoor Unit 63 Class	460	720	666	698	730	6-ϕ7 Hole

Installation

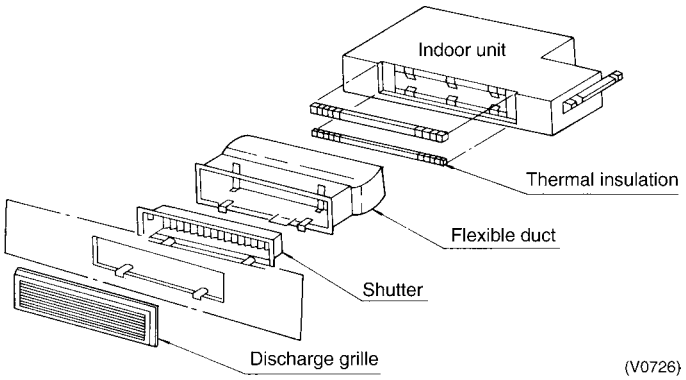

Air Discharge Blind Panel

This is the parts which closes the lower discharge outlet when the unit is used as a front discharge style.

Specifications

Items \ Model		KDBJ52F56W	KDBJ52F80W
External color		White	White
External Dimension (mm)	T	18	
	W	1,126	1,326
	D	119	
Materials		Steel plate	
Contents		Outlet decoration panel assembly, Decoration panel suspension plate, Name Plate, Caution plate set board	
Applied Decoration Panel		BYK45FJW1	BYK71FJW1
Applicable Models		25 · 32 · 40 Class	63 Class

Dimensions

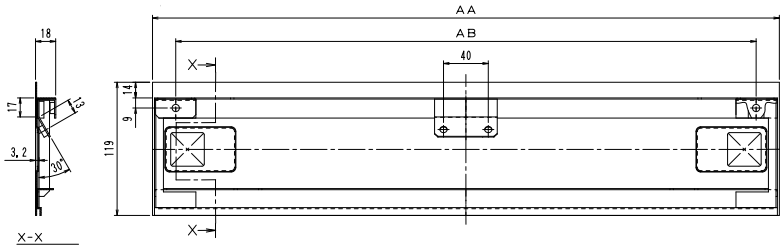

Model	AA	AB
KDBJ52F56W	1125.5	1084
KDBJ52F80W	1325.5	1284

JC : D3K1162A

Dimensions with the Optional Accessories

Panel Spacer

■ **FXKQ25~40MA**

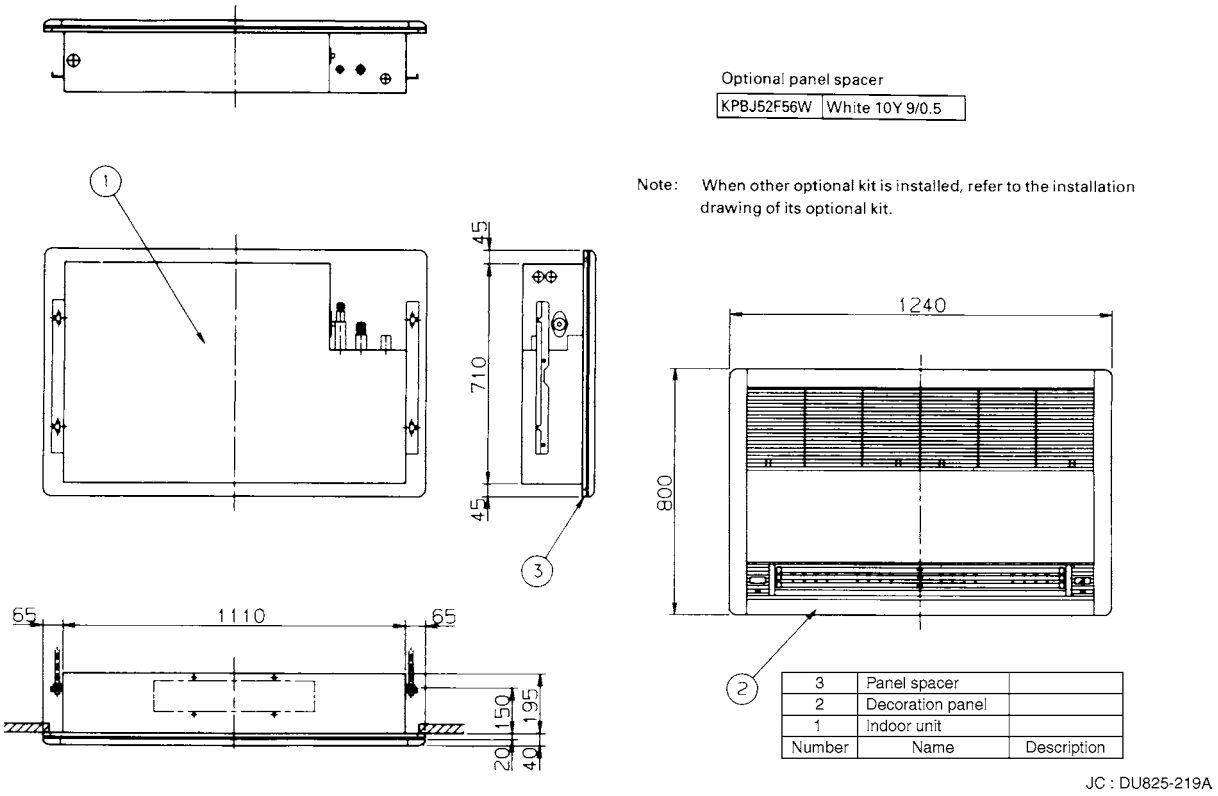

Optional panel spacer

KPBJ52F56W	White 10Y 9/0.5

Note: When other optional kit is installed, refer to the installation drawing of its optional kit.

Number	Name	Description
3	Panel spacer	
2	Decoration panel	
1	Indoor unit	

JC : DU825-219A

■ **FXKQ63MA**

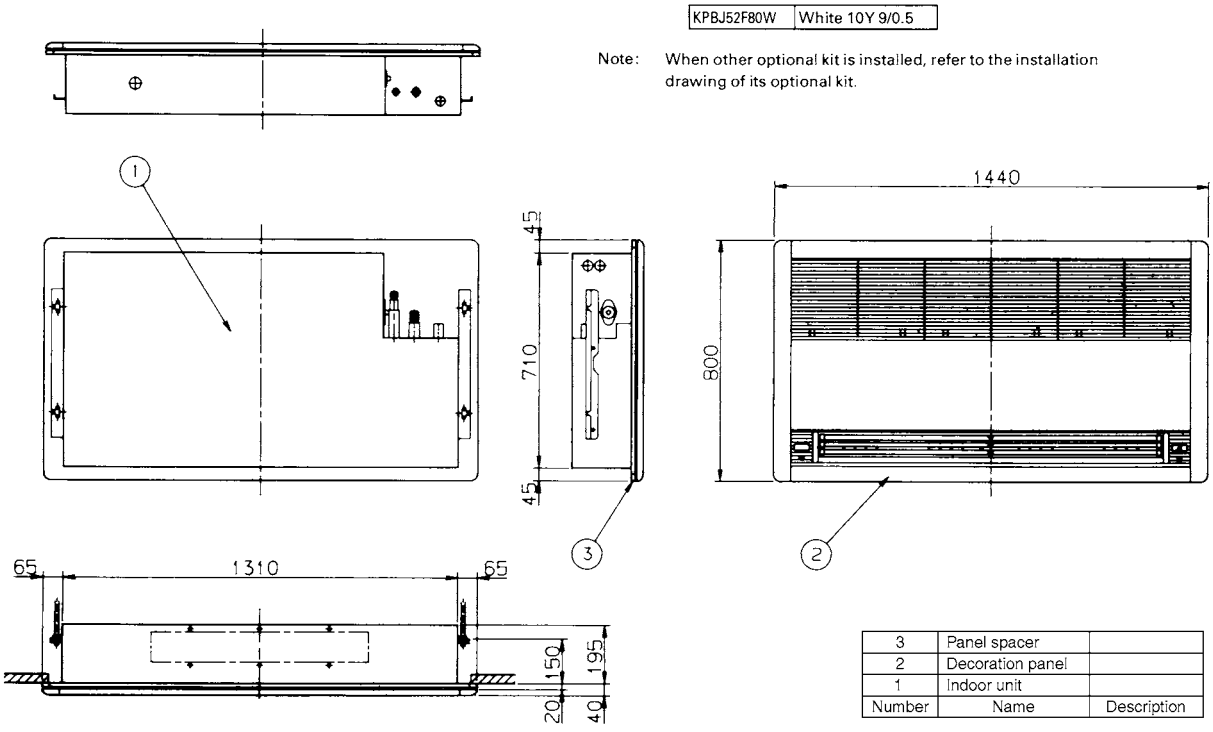

·Optional panel spacer

KPBJ52F80W	White 10Y 9/0.5

Note: When other optional kit is installed, refer to the installation drawing of its optional kit.

Number	Name	Description
3	Panel spacer	
2	Decoration panel	
1	Indoor unit	

JC : DU827-242A

FXDQ-P / FXDQ-N(A) Slim Ceiling Mounted Duct Type (with Drain Pump / without Drain Pump)

5

1. Features 114
   1.1 FXDQ-P 114
   1.2 FXDQ-N(A) 115
2. Specifications 116
   2.1 FXDQ-P 116
   2.2 FXDQ-N(A) 117
3. Dimensions 121
   3.1 FXDQ-P 121
   3.2 FXDQ-N(A) 123
4. Piping Diagrams 127
5. Wiring Diagrams 128
6. Electric Characteristics 130
   6.1 FXDQ-P 130
   6.2 FXDQ-N(A) 131
7. Capacity Tables 132
   7.1 Cooling Capacity 132
   7.2 Heating Capacity 133
8. Fan Performances 134
   8.1 FXDQ-P 134
   8.2 FXDQ-N(A) 135
9. Sound Levels 137
   9.1 FXDQ-P 137
   9.2 FXDQ-N(A) 138
10. Installation 139
   10.1 FXDQ-P 139
   10.2 FXDQ-N(A) 140
11. Accessories 148

1. Features

1.1 FXDQ-P

Slim design, quietness and static pressure switching

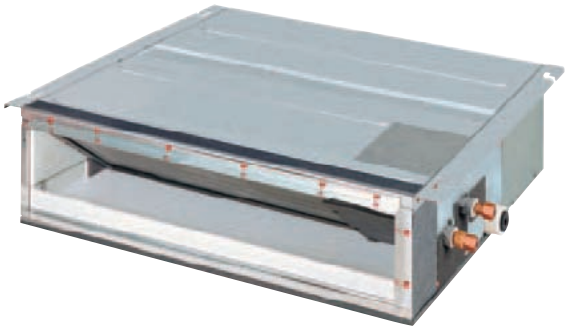

The best to use in drop-ceilings!

FXDQ20P/ FXDQ25P/ FXDQ32P

- Only 700 mm in width and 23 kg in weight, this model is optimum to install in limited spaces like drop-ceilings in hotels.

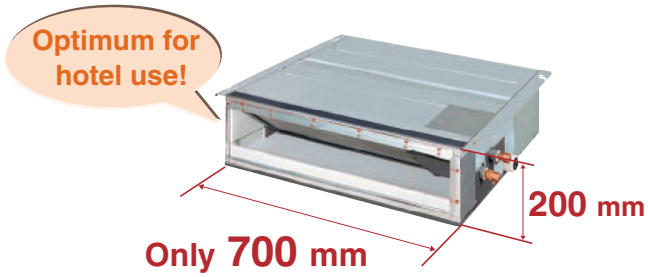



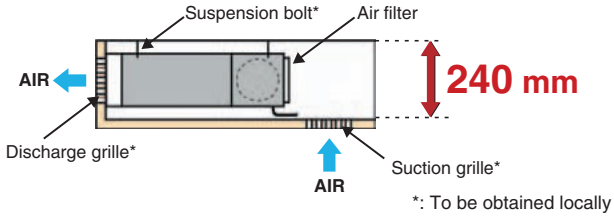

- External static pressure selectable by remote controller switching make this indoor unit a very comfortable and flexible model.
  10 Pa-30 Pa/factory set: 10 Pa for FXDQ-P models.

- FXDQ-P models are available in two types depending on installation conditions.
  FXDQ-PVE: with a drain-up pump (750 mm lift) as a standard accessory
  FXDQ-PVET: without a drain-up pump

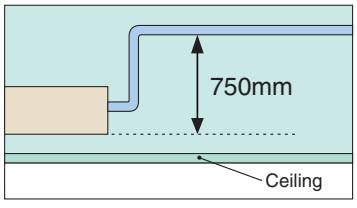

- Low operating sound (dB(A))

Class	20	25	32
Operating sound (H/L)	33/29	33/29	33/29

*The values of operation sound level represent those for rear-suction operation. Sound level values for bottom-suction operation can be obtained by adding 5 dB.
*Values are based on the following conditions:
FXDQ-P: external static pressure of 10 Pa

1.2 FXDQ-N(A)

FXDQ20N(A)/FXDQ25N(A)/FXDQ32N(A)
FXDQ40N(A)/FXDQ50N(A)/FXDQ63N(A)



5

Slim design, quietness and static pressure switching

●Only 200 mm in height, this new model can be installed in rooms with as little as 240 mm depth between the drop ceiling and ceiling slab.

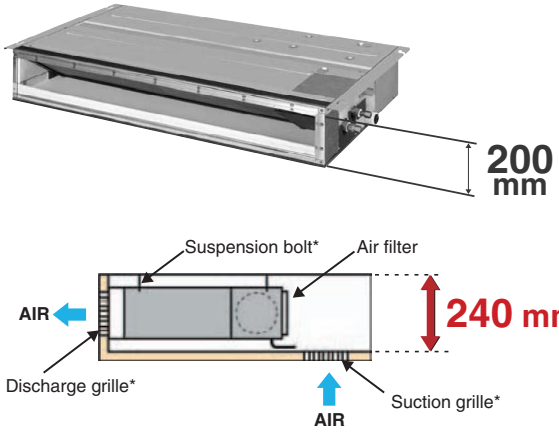



●Low operating sound

(dB(A))

Class	20	25	32	40	50	63
Operating sound (H/L)	33/29	33/29	33/29	34/30	35/31	36/32

*The values of operation sound level represent those for rear-suction operation. Sound level values for bottom-suction operation can be obtained by adding 5 dB. (When 15Pa)

●External static pressure selectable by remote controller (15Pa-44Pa / factory set : 15Pa) switching make this indoor unit a very comfortable and flexible model.

●FXDQ-N models are available in two types depending on installation conditions.

FXDQ-NVE: with a drain-up pump (750 mm lift) as a standard accessory
FXDQ-NVET: without a drain-up pump

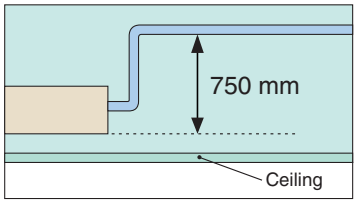

2. Specifications

2.1 FXDQ-P

Slim Ceiling Mounted Duct Type

Model			FXDQ20PVE (T)	FXDQ25PVE (T)	FXDQ32PVE (T)
★1 Cooling Capacity (19.5°CWB)		kcal/h	2,000	2,500	3,200
		Btu/h	7,800	9,900	12,600
		kW	2.3	2.9	3.7
★2 Cooling Capacity (19.0°CWB)		kW	2.2	2.8	3.6
★3 Heating Capacity		kcal/h	2,200	2,800	3,400
		Btu/h	8,500	10,900	13,600
		kW	2.5	3.2	4.0
Casing			Galvanized Steel Plate	Galvanized Steel Plate	Galvanized Steel Plate
Dimensions: (H×W×D)		mm	200×700×620	200×700×620	200×700×620
Coil (Cross Fin Coil)	Rows×Stages×Fin Pitch	mm	2×12×1.5	2×12×1.5	3×12×1.5
	Face Area	m^2	0.126	0.126	0.126
Fan	Model		—	—	—
	Type		Sirocco Fan	Sirocco Fan	Sirocco Fan
	Motor Output × Number of Units	W	62×1	62×1	62×1
	Air Flow Rate (H/L)	m^3/min	8.0/6.4	8.0/6.4	8.0/6.4
	External Static Pressure	Pa	30-10 ★5	30-10 ★5	30-10 ★5
	Drive		Direct Drive	Direct Drive	Direct Drive
Temperature Control			Microprocessor Thermostat for Cooling and Heating	Microprocessor Thermostat for Cooling and Heating	Microprocessor Thermostat for Cooling and Heating
Sound Absorbing Thermal Insulation Material			Foamed Polyethylene	Foamed Polyethylene	Foamed Polyethylene
Air Filter			Removal / Washable / Mildew Proof	Removal / Washable / Mildew Proof	Removal / Washable / Mildew Proof
Piping Connections	Liquid Pipes	mm	ϕ6.4 (Flare Connection)	ϕ6.4 (Flare Connection)	ϕ6.4 (Flare Connection)
	Gas Pipes	mm	ϕ12.7 (Flare Connection)	ϕ12.7 (Flare Connection)	ϕ12.7 (Flare Connection)
	Drain Pipe	mm	VP20 (External Dia. 26 Internal Dia. 20)	VP20 (External Dia. 26 Internal Dia. 20)	VP20 (External Dia. 26 Internal Dia. 20)
Machine Weight (Mass)		kg	23	23	23
★6 Sound Level (H/L)		dBA	33/29	33/29	33/29
Safety Devices			Fuse, Thermal Protector for Fan Motor	Fuse, Thermal Protector for Fan Motor	Fuse, Thermal Protector for Fan Motor
Refrigerant Control			Electronic Expansion Valve	Electronic Expansion Valve	Electronic Expansion Valve
Standard Accessories			Operation Manual, Installation Manual, Drain Hose, Sealing Pads, Clamps, Washers, Insulation for Fitting, Clamp Metal, Washer Fixing Plate, Screws for Duct Flanges, Air Filter	Operation Manual, Installation Manual, Drain Hose, Sealing Pads, Clamps, Washers, Insulation for Fitting, Clamp Metal, Washer Fixing Plate, Screws for Duct Flanges, Air Filter	Operation Manual, Installation Manual, Drain Hose, Sealing Pads, Clamps, Washers, Insulation for Fitting, Clamp Metal, Washer Fixing Plate, Screws for Duct Flanges, Air Filter
Drawing No.			C:3D052136		

Notes:

★1 Indoor temp. : 27°CDB, 19.5°CWB / outdoor temp; 35°CDB / Equivalent piping length: 7.5m, level difference: 0m.
★2 Indoor temp. : 27°CDB, 19.0°CWB / outdoor temp; 35°CDB / Equivalent piping length: 7.5m, level difference: 0m.
★3 Indoor temp. : 20°CDB / outdoor temp.: 7°CDB, 6°CWB / Equivalent piping length; 7.5m, level difference; 0m.
4 Capacities are net, including a deduction for cooling (an addition for heating) for indoor fan motor heat.
★5 External static pressure is changeable to set by the remote controller this pressure means “High static pressure - Standard static pressure”.
★6 The operation sound levels are the conversion values in anechoic chamber. In practice, the sound tend to be larger than the specified values due to ambient noise or reflections.
When the place of suction is changed to the bottom suction, the sound level will increase by approx. 5dBA.
7 Refer to page 130 for Fan Motor Input.

Conversion Formulae
kcal/h=kW×860 Btu/h=kW×3412 cfm=m^3/min×35.3

2.2 FXDQ-N(A)

Slim Ceiling Mounted Duct Type (with Drain Pump)

Model			FXDQ20NAVE	FXDQ25NAVE	FXDQ32NAVE
★1 Cooling Capacity (19.5°CWB)		kcal/h	2,000	2,500	3,200
		Btu/h	7,800	9,900	12,600
		kW	2.3	2.9	3.7
★2 Cooling Capacity (19.0°CWB)		kW	2.2	2.8	3.6
★3 Heating Capacity		kcal/h	2,200	2,800	3,400
		Btu/h	8,500	10,900	13,600
		kW	2.5	3.2	4.0
Casing			Galvanized Steel Plate	Galvanized Steel Plate	Galvanized Steel Plate
Dimensions: (H×W×D)		mm	200×900×620	200×900×620	200×900×620
Coil (Cross Fin Coil)	Rows×Stages×Fin Pitch	mm	2×12×1.5	2×12×1.5	2×12×1.5
	Face Area	m²	0.176	0.176	0.176
Fan	Model		—	—	—
	Type		Sirocco Fan	Sirocco Fan	Sirocco Fan
	Motor Output × Number of Units	W	62×1	62×1	62×1
	Air Flow Rate (H/L)	m³/min	9.5/7.5	9.5/7.5	10.5/8.5
	External Static Pressure	Pa	44-15 ★5	44-15 ★5	44-15 ★5
	Drive		Direct Drive	Direct Drive	Direct Drive
Temperature Control			Microprocessor Thermostat for Cooling and Heating	Microprocessor Thermostat for Cooling and Heating	Microprocessor Thermostat for Cooling and Heating
Sound Absorbing Thermal Insulation Material			Foamed Polyethylene	Foamed Polyethylene	Foamed Polyethylene
Air Filter			Removal / Washable / Mildew Proof	Removal / Washable / Mildew Proof	Removal / Washable / Mildew Proof
Piping Connections	Liquid Pipes	mm	ϕ6.4 (Flare Connection)	ϕ6.4 (Flare Connection)	ϕ6.4 (Flare Connection)
	Gas Pipes	mm	ϕ12.7 (Flare Connection)	ϕ12.7 (Flare Connection)	ϕ12.7 (Flare Connection)
	Drain Pipe	mm	VP20 (External Dia. 26 Internal Dia. 20)	VP20 (External Dia. 26 Internal Dia. 20)	VP20 (External Dia. 26 Internal Dia. 20)
Machine Weight (Mass)		kg	26	26	26
★6 Sound Level (H/L)		dBA	33/29	33/29	33/29
Safety Devices			Fuse, Thermal Protector for Fan Motor	Fuse, Thermal Protector for Fan Motor	Fuse, Thermal Protector for Fan Motor
Refrigerant Control			Electronic Expansion Valve	Electronic Expansion Valve	Electronic Expansion Valve
Standard Accessories			Operation Manual, Installation Manual, Warranty, Drain Hose, Sealing Pads, Clamps, Washers, Insulation for Fitting, Clamp Metal, Washer Fixing Plate, Screws for Duct Flanges, Air Filter	Operation Manual, Installation Manual, Warranty, Drain Hose, Sealing Pads, Clamps, Washers, Insulation for Fitting, Clamp Metal, Washer Fixing Plate, Screws for Duct Flanges, Air Filter	Operation Manual, Installation Manual, Warranty, Drain Hose, Sealing Pads, Clamps, Washers, Insulation for Fitting, Clamp Metal, Washer Fixing Plate, Screws for Duct Flanges, Air Filter
Drawing No.			C : 3D045744		

Notes:

★1 Indoor temp. : 27°CDB, 19.5°CWB / outdoor temp; 35°CDB / Equivalent piping length: 7.5m, level difference: 0m.
★2 Indoor temp. : 27°CDB, 19.0°CWB / outdoor temp; 35°CDB / Equivalent piping length: 7.5m, level difference: 0m.
★3 Indoor temp. : 20°CDB / outdoor temp.: 7°CDB, 6°CWB / Equivalent piping length; 7.5m, level difference; 0m. (Heat pump only)
4 Capacities are net, including a deduction for cooling (an addition for heating) for indoor fan motor heat.
★5 External static pressure is changeable to set by the remote controller this pressure means “High static pressure - Standard static pressure”.
★6 The operation sound levels are the conversion values in anechoic chamber. In practice, the sound tend to be larger than the specified values due to ambient noise or reflections.
When the place of suction is changed to the bottom suction, the sound level will increase by approx. 5dBA.
7 Refer to page 131 for Fan Motor Input.

Conversion Formulae
kcal/h=kW×860 Btu/h=kW×3412 cfm=m³/min×35.3

Slim Ceiling Mounted Duct Type (with Drain Pump)

Model			FXDQ40NAVE	FXDQ50NAVE	FXDQ63NAVE
★1 Cooling Capacity (19.5°CWB)		kcal/h	4,000	5,000	6,300
		Btu/h	16,000	19,800	24,900
		kW	4.7	5.8	7.3
★2 Cooling Capacity (19.0°CWB)		kW	4.5	5.6	7.1
★3 Heating Capacity		kcal/h	4,300	5,400	6,900
		Btu/h	17,100	21,500	27,300
		kW	5.0	6.3	8.0
Casing Color			Galvanized Steel Plate	Galvanized Steel Plate	Galvanized Steel Plate
Dimensions: (H×W×D)		mm	200×900×620	200×900×620	200×1100×620
Coil (Cross Fin Coil)	Rows×Stages×Fin Pitch	mm	3×12×1.5	3×12×1.5	3×12×1.5
	Face Area	m²	0.176	0.176	0.227
Fan	Model		—	—	—
	Type		Sirocco Fan	Sirocco Fan	Sirocco Fan
	Motor Output × Number of Units	W	62×1	130×1	130×1
	Air Flow Rate (H/L)	m³/min	10.5/8.5	12.5/10.0	16.5/13.0
	External Static Pressure	Pa	44-15 ★5	44-15 ★5	44-15 ★5
	Drive		Direct Drive	Direct Drive	Direct Drive
Temperature Control			Microprocessor Thermostat for Cooling and Heating	Microprocessor Thermostat for Cooling and Heating	Microprocessor Thermostat for Cooling and Heating
Sound Absorbing Thermal Insulation Material			Foamed Polyethylene	Foamed Polyethylene	Foamed Polyethylene
Air Filter			Removal / Washable / Mildew Proof	Removal / Washable / Mildew Proof	Removal / Washable / Mildew Proof
Piping Connections	Liquid Pipes	mm	ϕ6.4 (Flare Connection)	ϕ6.4 (Flare Connection)	ϕ9.5 (Flare Connection)
	Gas Pipes	mm	ϕ12.7 (Flare Connection)	ϕ12.7 (Flare Connection)	ϕ15.9 (Flare Connection)
	Drain Pipe	mm	VP20 (External Dia. 26 Internal Dia. 20)	VP20 (External Dia. 26 Internal Dia. 20)	VP20 (External Dia. 26 Internal Dia. 20)
Machine Weight (Mass)		kg	27	28	31
★6 Sound Level (H/L)		dBA	34/30	35/31	36/32
Safety Devices			Fuse, Thermal Protector for Fan Motor	Fuse, Thermal Protector for Fan Motor	Fuse, Thermal Protector for Fan Motor
Refrigerant Control			Electronic Expansion Valve	Electronic Expansion Valve	Electronic Expansion Valve
Standard Accessories			Operation Manual, Installation Manual, Warranty, Drain Hose, Sealing Pads, Clamps, Washers, Insulation for Fitting, Clamp Metal, Washer Fixing Plate, Screws for Duct Flanges, Air Filter	Operation Manual, Installation Manual, Warranty, Drain Hose, Sealing Pads, Clamps, Washers, Insulation for Fitting, Clamp Metal, Washer Fixing Plate, Screws for Duct Flanges, Air Filter	Operation Manual, Installation Manual, Warranty, Drain Hose, Sealing Pads, Clamps, Washers, Insulation for Fitting, Clamp Metal, Washer Fixing Plate, Screws for Duct Flanges, Air Filter
Drawing No.			C : 3D045744		

Notes:

★1 Indoor temp. : 27°CDB, 19.5°CWB / outdoor temp; 35°CDB / Equivalent piping length: 7.5m, level difference: 0m.
★2 Indoor temp. : 27°CDB, 19.0°CWB / outdoor temp; 35°CDB / Equivalent piping length: 7.5m, level difference: 0m.
★3 Indoor temp. : 20°CDB / outdoor temp.: 7°CDB, 6°CWB / Equivalent piping length; 7.5m, level difference; 0m. (Heat pump only)
4 Capacities are net, including a deduction for cooling (an addition for heating) for indoor fan motor heat.
★5 External static pressure is changeable to set by the remote controller this pressure means “High static pressure - Standard static pressure”.
★6 The operation sound levels are the conversion values in anechoic chamber. In practice, the sound tend to be larger than the specified values due to ambient noise or reflections.
When the place of suction is changed to the bottom suction, the sound level will increase by approx. 5dBA.
7 Refer to page 131 for Fan Motor Input.

Conversion Formulae
kcal/h=kW×860 Btu/h=kW×3412 cfm=m³/min×35.3

Slim Ceiling Mounted Duct Type (without Drain Pump)

Model			FXDQ20NVET	FXDQ25NVET	FXDQ32NVET
★1 Cooling Capacity (19.5°CWB)		kcal/h	2,000	2,500	3,200
		Btu/h	7,800	9,900	12,600
		kW	2.3	2.9	3.7
★2 Cooling Capacity (19.0°CWB)		kW	2.2	2.8	3.6
★3 Heating Capacity		kcal/h	2,200	2,800	3,400
		Btu/h	8,500	10,900	13,600
		kW	2.5	3.2	4.0
Casing			Galvanized Steel Plate	Galvanized Steel Plate	Galvanized Steel Plate
Dimensions: (H×W×D)		mm	200×900×620	200×900×620	200×900×620
Coil (Cross Fin Coil)	Rows×Stages×Fin Pitch	mm	2×12×1.5	2×12×1.5	2×12×1.5
	Face Area	m²	0.176	0.176	0.176
Fan	Model		—	—	—
	Type		Sirocco Fan	Sirocco Fan	Sirocco Fan
	Motor Output × Number of Units	W	62×1	62×1	62×1
	Air Flow Rate (H/L)	m³/min	9.5/7.5	9.5/7.5	10.5/8.5
	External Static Pressure	Pa	44-15 ★5	44-15 ★5	44-15 ★5
	Drive		Direct Drive	Direct Drive	Direct Drive
Temperature Control			Microprocessor Thermostat for Cooling and Heating	Microprocessor Thermostat for Cooling and Heating	Microprocessor Thermostat for Cooling and Heating
Sound Absorbing Thermal Insulation Material			Foamed Polyethylene	Foamed Polyethylene	Foamed Polyethylene
Air Filter			Removal / Washable / Mildew Proof	Removal / Washable / Mildew Proof	Removal / Washable / Mildew Proof
Piping Connections	Liquid Pipes	mm	ϕ6.4 (Flare Connection)	ϕ6.4 (Flare Connection)	ϕ6.4 (Flare Connection)
	Gas Pipes	mm	ϕ12.7 (Flare Connection)	ϕ12.7 (Flare Connection)	ϕ12.7 (Flare Connection)
	Drain Pipe	mm	VP20 (External Dia. 26 Internal Dia. 20)	VP20 (External Dia. 26 Internal Dia. 20)	VP20 (External Dia. 26 Internal Dia. 20)
Machine Weight (Mass)		kg	26	26	26
★6 Sound Level (H/L)		dBA	33/29	33/29	33/29
Safety Devices			Fuse, Thermal Protector for Fan Motor	Fuse, Thermal Protector for Fan Motor	Fuse, Thermal Protector for Fan Motor
Refrigerant Control			Electronic Expansion Valve	Electronic Expansion Valve	Electronic Expansion Valve
Standard Accessories			Operation Manual, Installation Manual, Drain Hose, Sealing Pads, Clamps, Washers, Insulation for Fitting, Clamp Metal, Washer Fixing Plate, Screws for Duct Flanges, Air Filter	Operation Manual, Installation Manual, Drain Hose, Sealing Pads, Clamps, Washers, Insulation for Fitting, Clamp Metal, Washer Fixing Plate, Screws for Duct Flanges, Air Filter	Operation Manual, Installation Manual, Drain Hose, Sealing Pads, Clamps, Washers, Insulation for Fitting, Clamp Metal, Washer Fixing Plate, Screws for Duct Flanges, Air Filter
Drawing No.			C : 3D049693		

Notes:

★1 Indoor temp. : 27°CDB, 19.5°CWB / outdoor temp; 35°CDB / Equivalent piping length: 7.5m, level difference: 0m.
★2 Indoor temp. : 27°CDB, 19.0°CWB / outdoor temp; 35°CDB / Equivalent piping length: 7.5m, level difference: 0m.
★3 Indoor temp. : 20°CDB / outdoor temp.: 7°CDB, 6°CWB / Equivalent piping length; 7.5m, level difference; 0m. (Heat pump only)
4 Capacities are net, including a deduction for cooling (an addition for heating) for indoor fan motor heat.
★5 External static pressure is changeable to set by the remote controller this pressure means “High static pressure - Standard static pressure”.
★6 The operation sound levels are the conversion values in anechoic chamber. In practice, the sound tend to be larger than the specified values due to ambient noise or reflections.
When the place of suction is changed to the bottom suction, the sound level will increase by approx. 5dBA.
7 Refer to page 131 for Fan Motor Input.

Conversion Formulae
kcal/h=kW×860 Btu/h=kW×3412 cfm=m³/min×35.3

Slim Ceiling Mounted Duct Type (without Drain Pump)

Model			FXDQ40NVET	FXDQ50NVET	FXDQ63NVET
★1 Cooling Capacity (19.5°CWB)		kcal/h	4,000	5,000	6,300
		Btu/h	16,000	19,800	24,900
		kW	4.7	5.8	7.3
★2 Cooling Capacity (19.0°CWB)		kW	4.5	5.6	7.1
★3 Heating Capacity		kcal/h	4,300	5,400	6,900
		Btu/h	17,100	21,500	27,300
		kW	5.0	6.3	8.0
Casing Color			Galvanized Steel Plate	Galvanized Steel Plate	Galvanized Steel Plate
Dimensions: (H×W×D)		mm	200×900×620	200×900×620	200×1100×620
Coil (Cross Fin Coil)	Rows×Stages×Fin Pitch	mm	3×12×1.5	3×12×1.5	3×12×1.5
	Face Area	m²	0.176	0.176	0.227
Fan	Model		—	—	—
	Type		Sirocco Fan	Sirocco Fan	Sirocco Fan
	Motor Output × Number of Units	W	62×1	130×1	130×1
	Air Flow Rate (H/L)	m³/min	10.5/8.5	12.5/10.0	16.5/13.0
	External Static Pressure	Pa	44-15 ★5	44-15 ★5	44-15 ★5
	Drive		Direct Drive	Direct Drive	Direct Drive
Temperature Control			Microprocessor Thermostat for Cooling and Heating	Microprocessor Thermostat for Cooling and Heating	Microprocessor Thermostat for Cooling and Heating
Sound Absorbing Thermal Insulation Material			Foamed Polyethylene	Foamed Polyethylene	Foamed Polyethylene
Air Filter			Removal / Washable / Mildew Proof	Removal / Washable / Mildew Proof	Removal / Washable / Mildew Proof
Piping Connections	Liquid Pipes	mm	ϕ6.4 (Flare Connection)	ϕ6.4 (Flare Connection)	ϕ9.5 (Flare Connection)
	Gas Pipes	mm	ϕ12.7 (Flare Connection)	ϕ12.7 (Flare Connection)	ϕ15.9 (Flare Connection)
	Drain Pipe	mm	VP20 (External Dia. 26 Internal Dia. 20)	VP20 (External Dia. 26 Internal Dia. 20)	VP20 (External Dia. 26 Internal Dia. 20)
Machine Weight (Mass)		kg	27	28	31
★6 Sound Level (H/L)		dBA	34/30	35/31	36/32
Safety Devices			Fuse, Thermal Protector for Fan Motor	Fuse, Thermal Protector for Fan Motor	Fuse, Thermal Protector for Fan Motor
Refrigerant Control			Electronic Expansion Valve	Electronic Expansion Valve	Electronic Expansion Valve
Standard Accessories			Operation Manual, Installation Manual, Drain Hose, Sealing Pads, Clamps, Washers, Insulation for Fitting, Clamp Metal, Washer Fixing Plate, Screws for Duct Flanges, Air Filter	Operation Manual, Installation Manual, Drain Hose, Sealing Pads, Clamps, Washers, Insulation for Fitting, Clamp Metal, Washer Fixing Plate, Screws for Duct Flanges, Air Filter	Operation Manual, Installation Manual, Drain Hose, Sealing Pads, Clamps, Washers, Insulation for Fitting, Clamp Metal, Washer Fixing Plate, Screws for Duct Flanges, Air Filter
Drawing No.			C : 3D049693		

Notes:

★1 Indoor temp. : 27°CDB, 19.5°CWB / outdoor temp; 35°CDB / Equivalent piping length: 7.5m, level difference: 0m.
★2 Indoor temp. : 27°CDB, 19.0°CWB / outdoor temp; 35°CDB / Equivalent piping length: 7.5m, level difference: 0m.
★3 Indoor temp. : 20°CDB / outdoor temp.: 7°CDB, 6°CWB / Equivalent piping length; 7.5m, level difference; 0m. (Heat pump only)
4 Capacities are net, including a deduction for cooling (an addition for heating) for indoor fan motor heat.
★5 External static pressure is changeable to set by the remote controller this pressure means “High static pressure - Standard static pressure”.
★6 The operation sound levels are the conversion values in anechoic chamber. In practice, the sound tend to be larger than the specified values due to ambient noise or reflections.
When the place of suction is changed to the bottom suction, the sound level will increase by approx. 5dBA.
7 Refer to page 131 for Fan Motor Input.

Conversion Formulae
kcal/h=kW×860 Btu/h=kW×3412 cfm=m³/min×35.3

3. Dimensions

3.1 FXDQ-P

FXDQ20P · 25P · 32PVE (with Drain Pump)

Unit (mm)

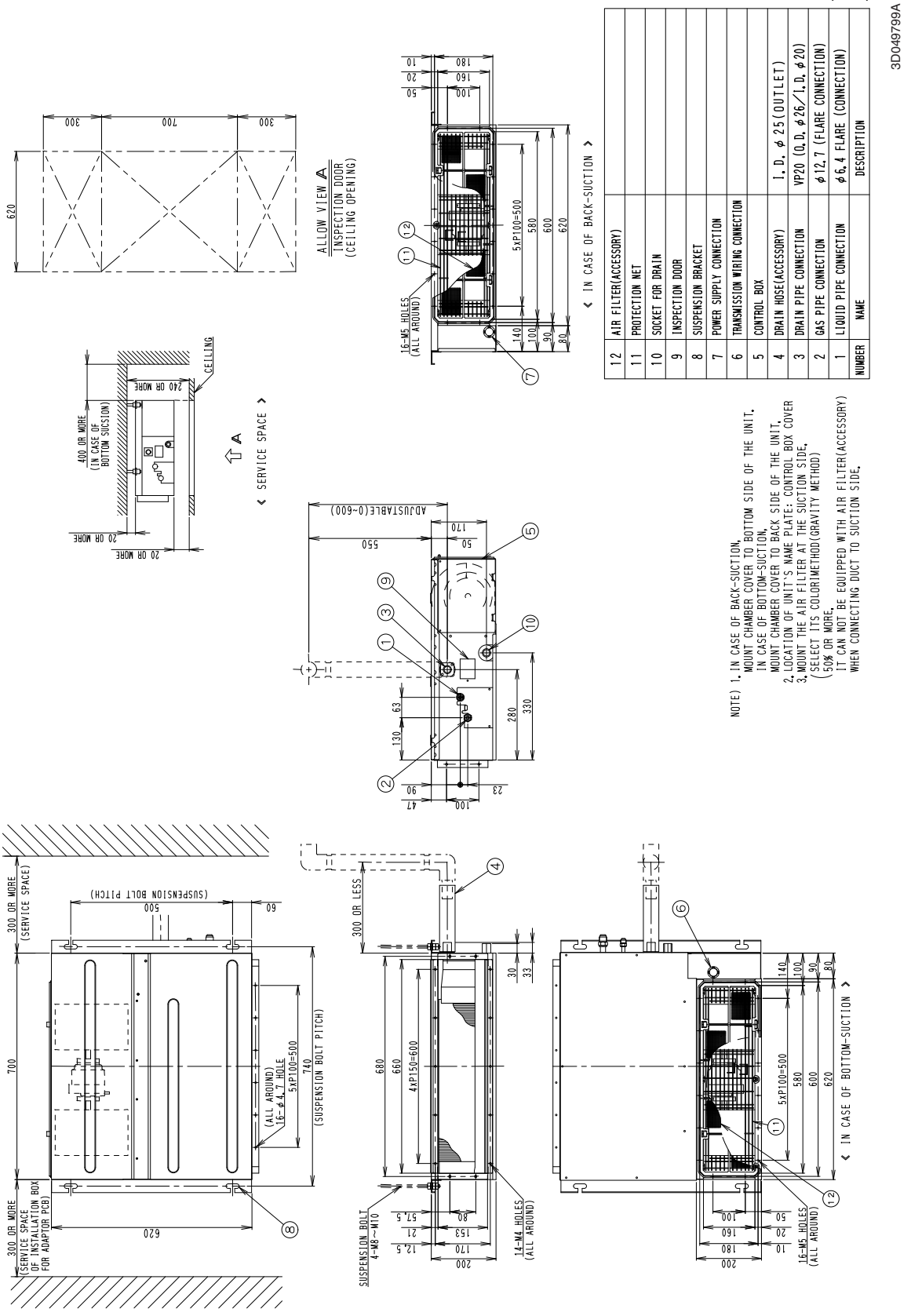

NUMBER	NAME	DESCRIPTION
12	AIR FILTER(ACCESSORY)	
11	PROTECTION NET	
10	SOCKET FOR DRAIN	
9	INSPECTION DOOR	
8	SUSPENSION BRACKET	
7	POWER SUPPLY CONNECTION	
6	TRANSMISSION WIRING CONNECTION	
5	CONTROL BOX	
4	DRAIN HOSE(ACCESSORY)	I. D. φ25 (OUTLET)
3	DRAIN PIPE CONNECTION	VP20 (O. D. φ26/I. D. φ20)
2	GAS PIPE CONNECTION	φ12.7 (FLARE CONNECTION)
1	LIQUID PIPE CONNECTION	φ6.4 FLARE (CONNECTION)

NOTE) 1. IN CASE OF BACK-SUCTION,
MOUNT CHAMBER COVER TO BOTTOM SIDE OF THE UNIT.
IN CASE OF BOTTOM-SUCTION,
MOUNT CHAMBER COVER TO BACK SIDE OF THE UNIT.
2. LOCATION OF UNIT'S NAME PLATE: CONTROL BOX COVER
3. MOUNT THE AIR FILTER AT THE SUCTION SIDE.
(SELECT ITS COLOR/METHOD(GRAVITY METHOD)
50% OR MORE.
IT CAN NOT BE EQUIPPED WITH AIR FILTER(ACCESSORY)
WHEN CONNECTING DUCT TO SUCTION SIDE.

FXDQ20P · 25P · 32PVET (without Drain Pump)

Unit (mm)

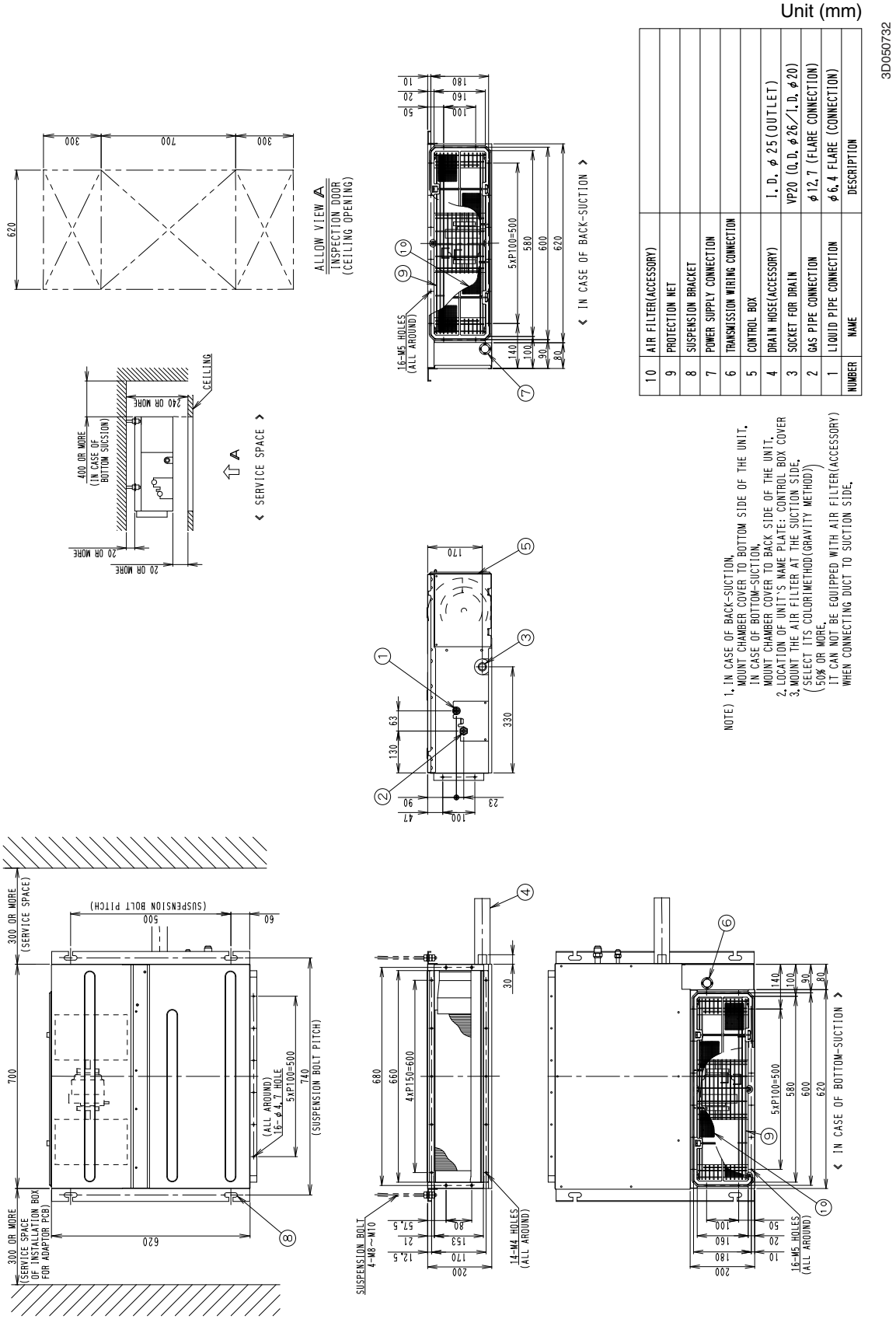

3.2 FXDQ-N(A)

FXDQ20NA · 25NA · 32NA · 40NA · 50NAVE (with Drain Pump)

Unit (mm)

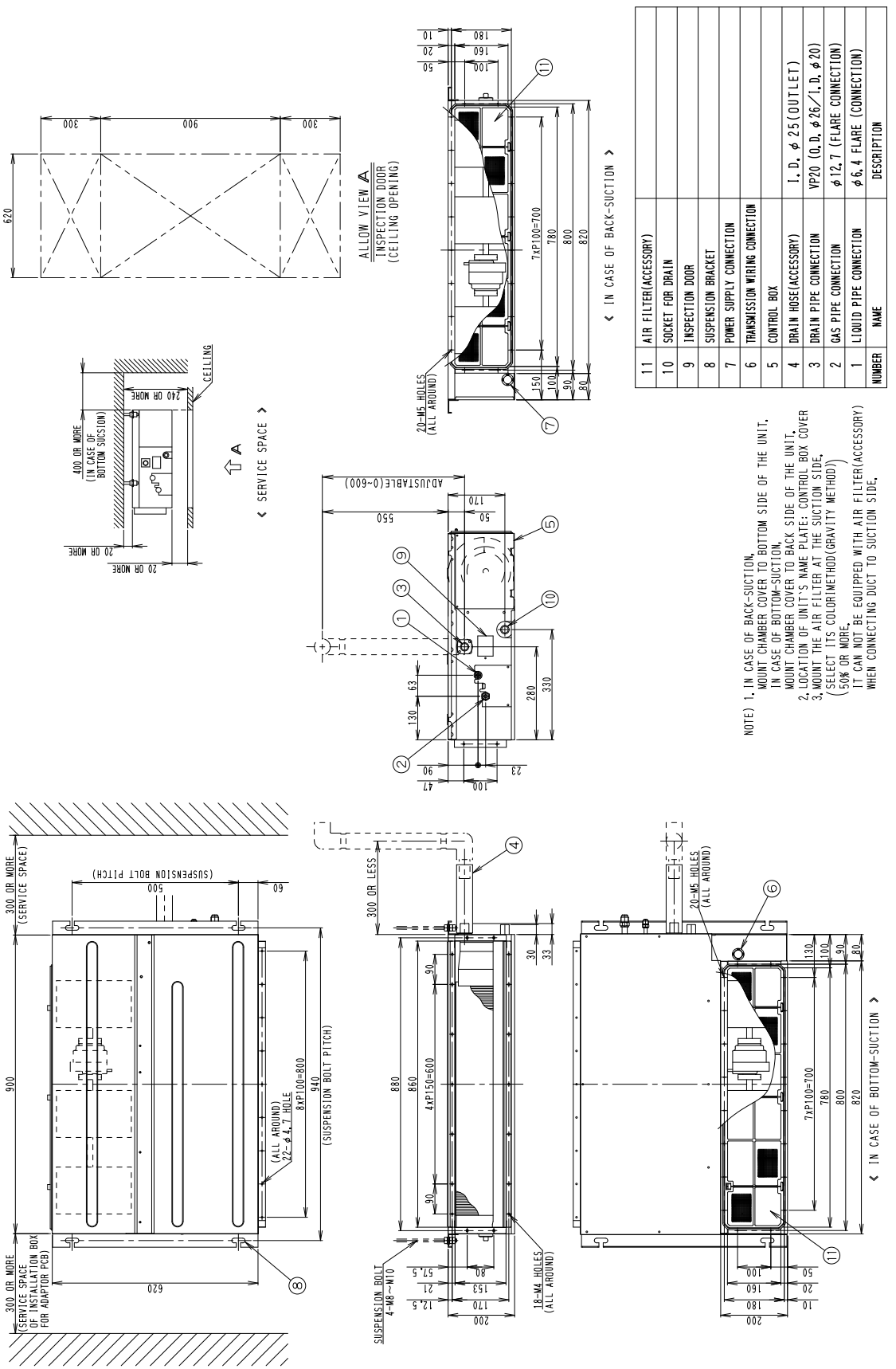

NUMBER	NAME	DESCRIPTION
11	AIR FILTER(ACCESSORY)	
10	SOCKET FOR DRAIN	
9	INSPECTION DOOR	
8	SUSPENSION BRACKET	
7	POWER SUPPLY CONNECTION	
6	TRANSMISSION WIRING CONNECTION	
5	CONTROL BOX	
4	DRAIN HOSE(ACCESSORY)	I.D. φ25(OUTLET)
3	DRAIN PIPE CONNECTION	VP20 (O.D. φ26/I.D. φ20)
2	GAS PIPE CONNECTION	φ12.7 (FLARE CONNECTION)
1	LIQUID PIPE CONNECTION	φ6.4 FLARE (CONNECTION)

NOTE) 1. IN CASE OF BACK-SUCTION,
MOUNT CHAMBER COVER TO BOTTOM SIDE OF THE UNIT.
IN CASE OF BOTTOM-SUCTION,
MOUNT CHAMBER COVER TO BACK SIDE OF THE UNIT.
2. LOCATION OF UNIT'S NAME PLATE: CONTROL BOX COVER
3. MOUNT THE AIR FILTER AT THE SUCTION SIDE.
(SELECT ITS COLORIMETHOD(GRAVITY METHOD))
50% OR MORE.
IT CAN NOT BE EQUIPPED WITH AIR FILTER(ACCESSORY)
WHEN CONNECTING DUCT TO SUCTION SIDE.

FXDQ63NAVE (with Drain Pump)

Unit (mm)

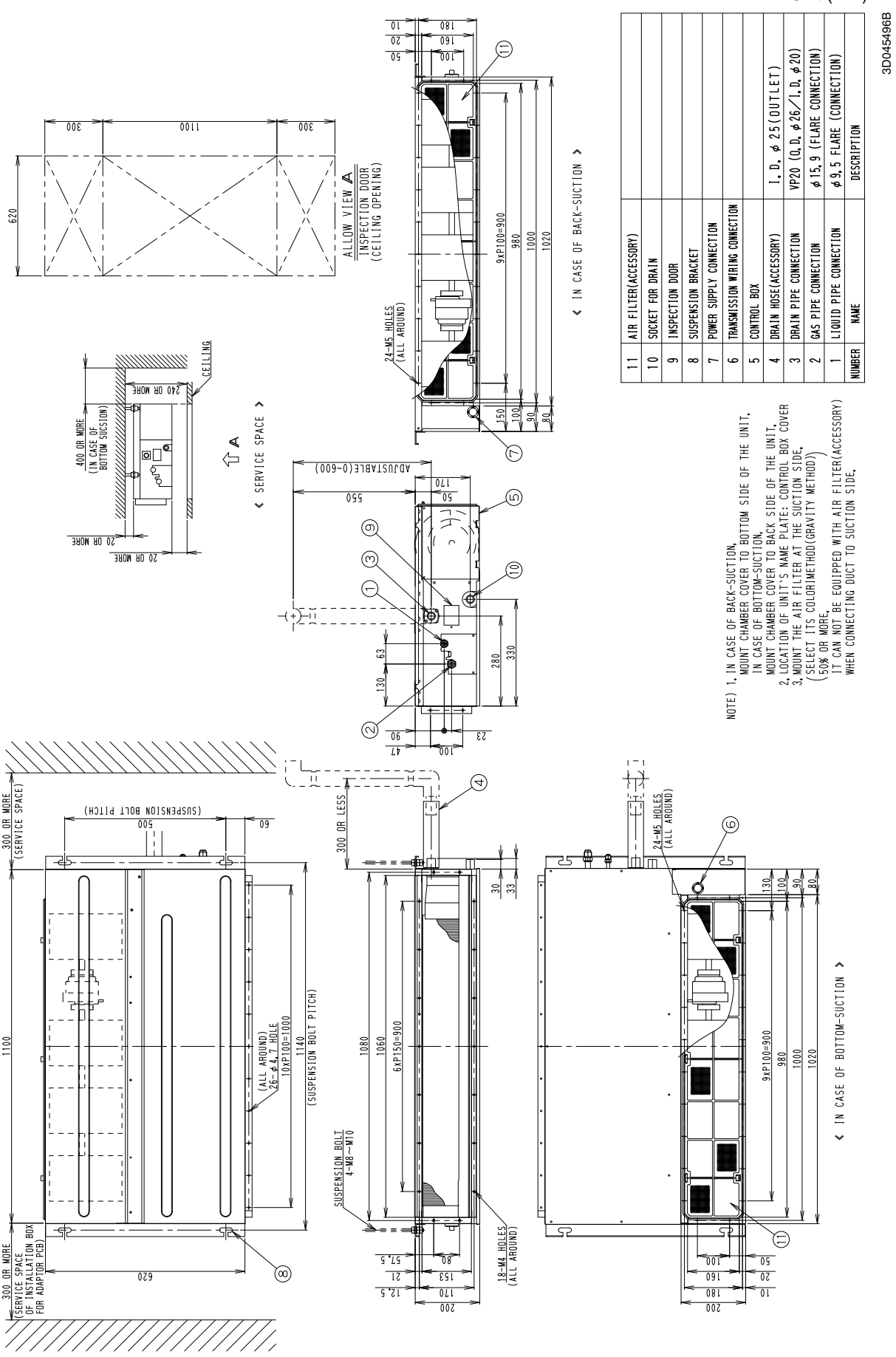

FXDQ20N · 25N · 32N · 40N · 50NVET (without Drain Pump)

Unit (mm)

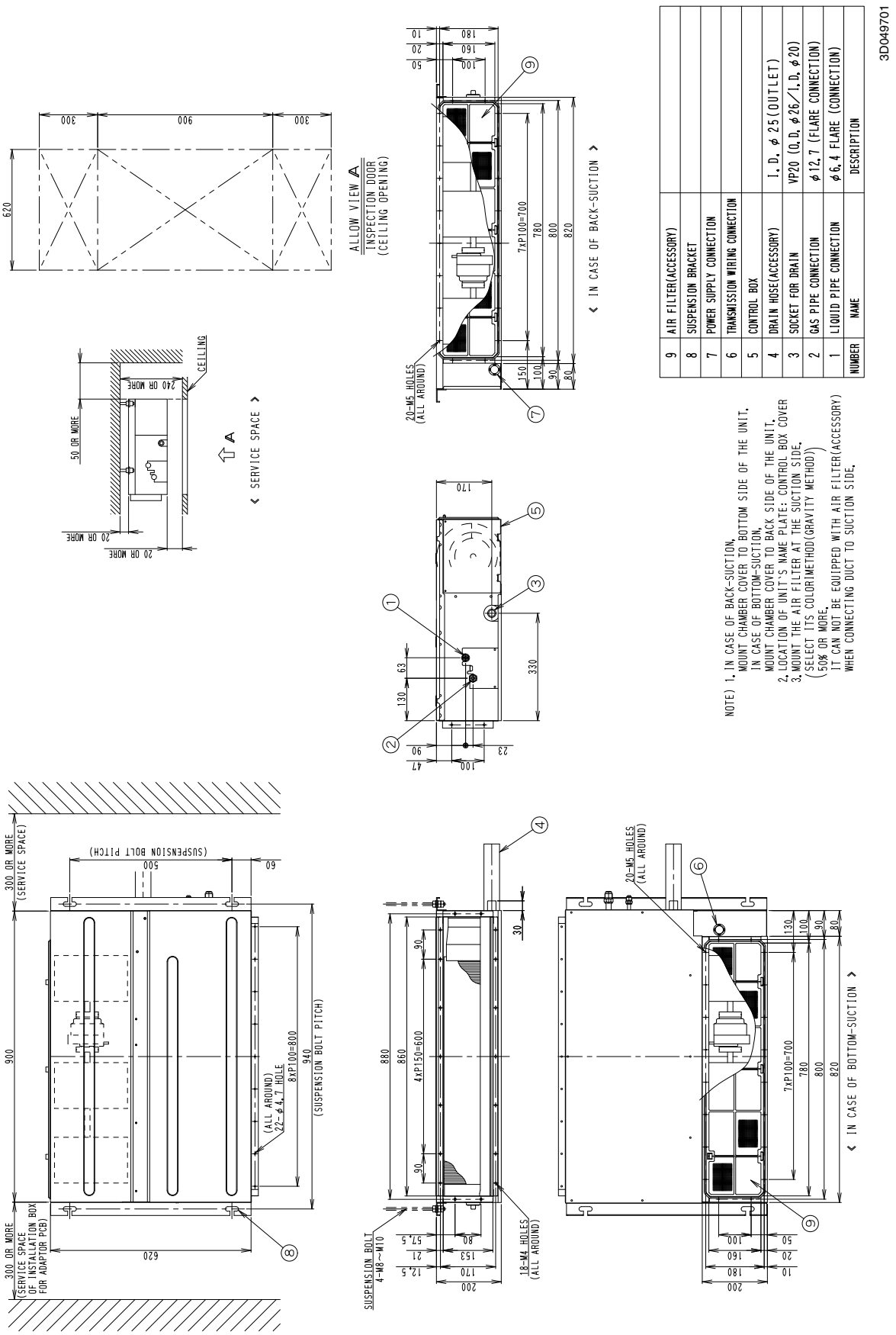

NUMBER	NAME	DESCRIPTION
9	AIR FILTER(ACCESSORY)	
8	SUSPENSION BRACKET	
7	POWER SUPPLY CONNECTION	
6	TRANSMISSION WIRING CONNECTION	
5	CONTROL BOX	
4	DRAIN HOSE(ACCESSORY)	I.D. φ25(OUTLET)
3	SOCKET FOR DRAIN	VP20 (O.D. φ26/I.D. φ20)
2	GAS PIPE CONNECTION	φ12.7 (FLARE CONNECTION)
1	LIQUID PIPE CONNECTION	φ6.4 FLARE (CONNECTION)

FXDQ63NVET (without Drain Pump)

Unit (mm)

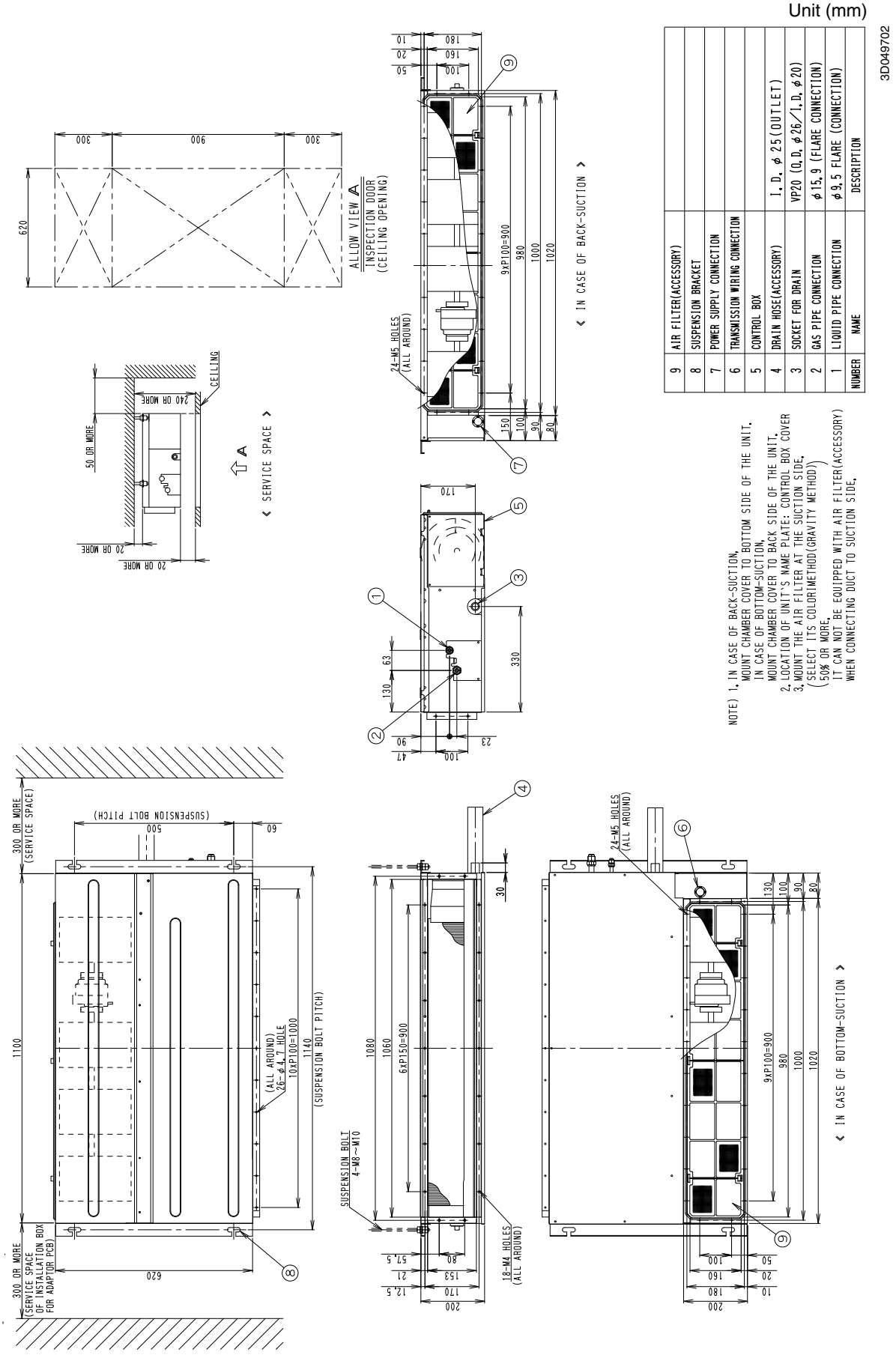

4. Piping Diagrams

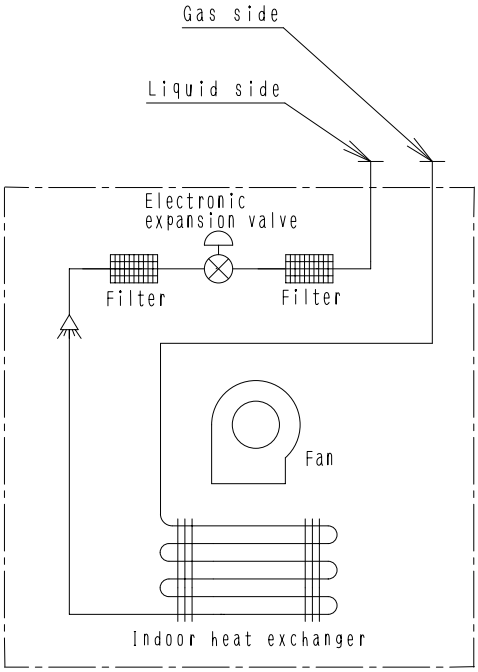

4D043864J

■ **Refrigerant pipe connection port diameters**

(mm)

Model	Gas	Liquid
FXDQ20P / 25P / 32PVE(T)	ϕ12.7	ϕ6.4
FXDQ20N(A) / 25N(A) / 32N(A) / 40N(A) / 50N(A)VE(T)	ϕ12.7	ϕ6.4
FXDQ63N(A)VE(T)	ϕ15.9	ϕ9.5

5

5. Wiring Diagrams

FXDQ20P · 25P · 32PVE (with Drain Pump)
FXDQ20NA · 25NA · 32NA · 40NA · 50NA · 63NAVE (with Drain Pump)

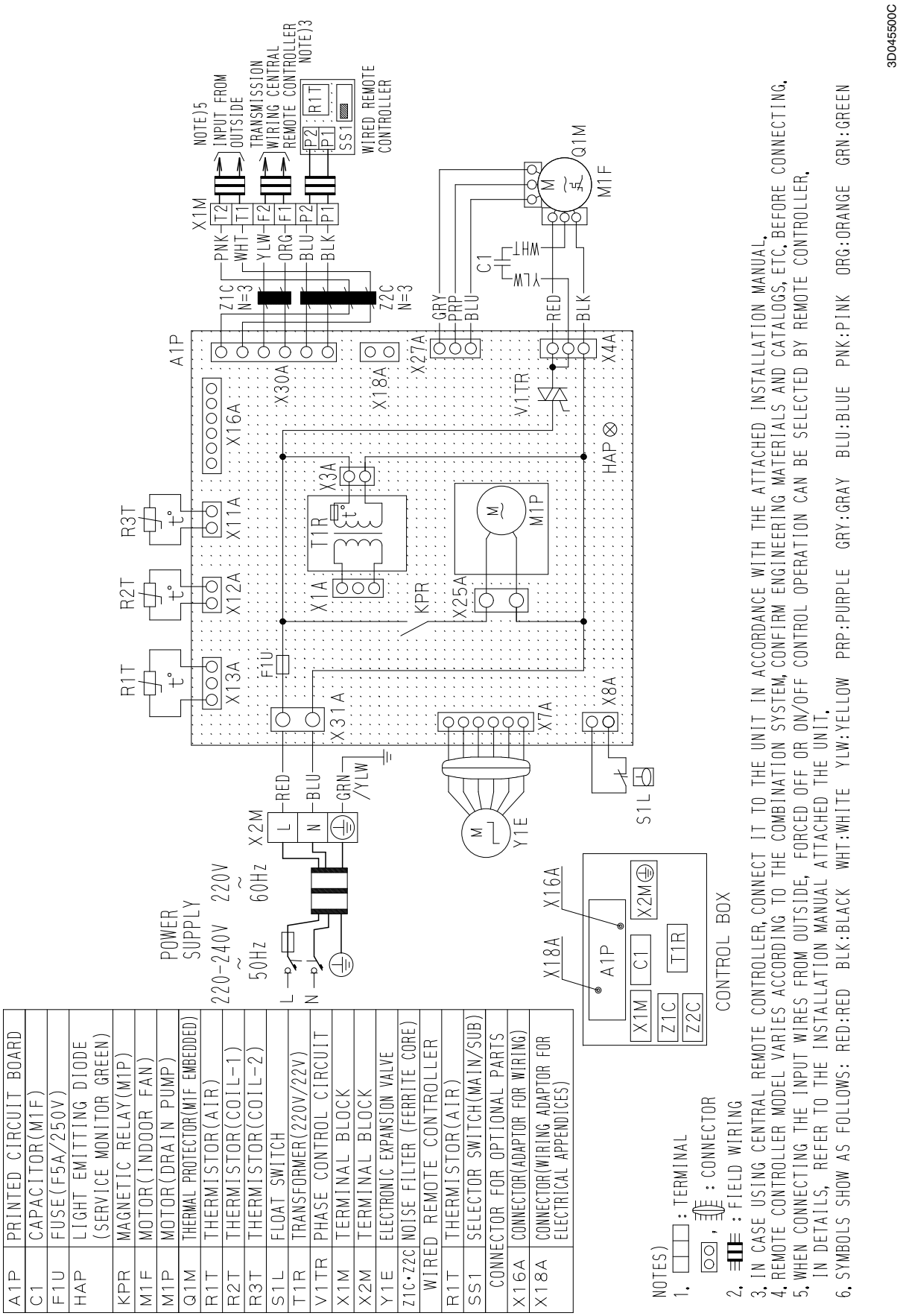

FXDQ20P · 25P · 32PVET (without Drain Pump)
FXDQ20N · 25N · 32N · 40N · 50N · 63NVET (without Drain Pump)

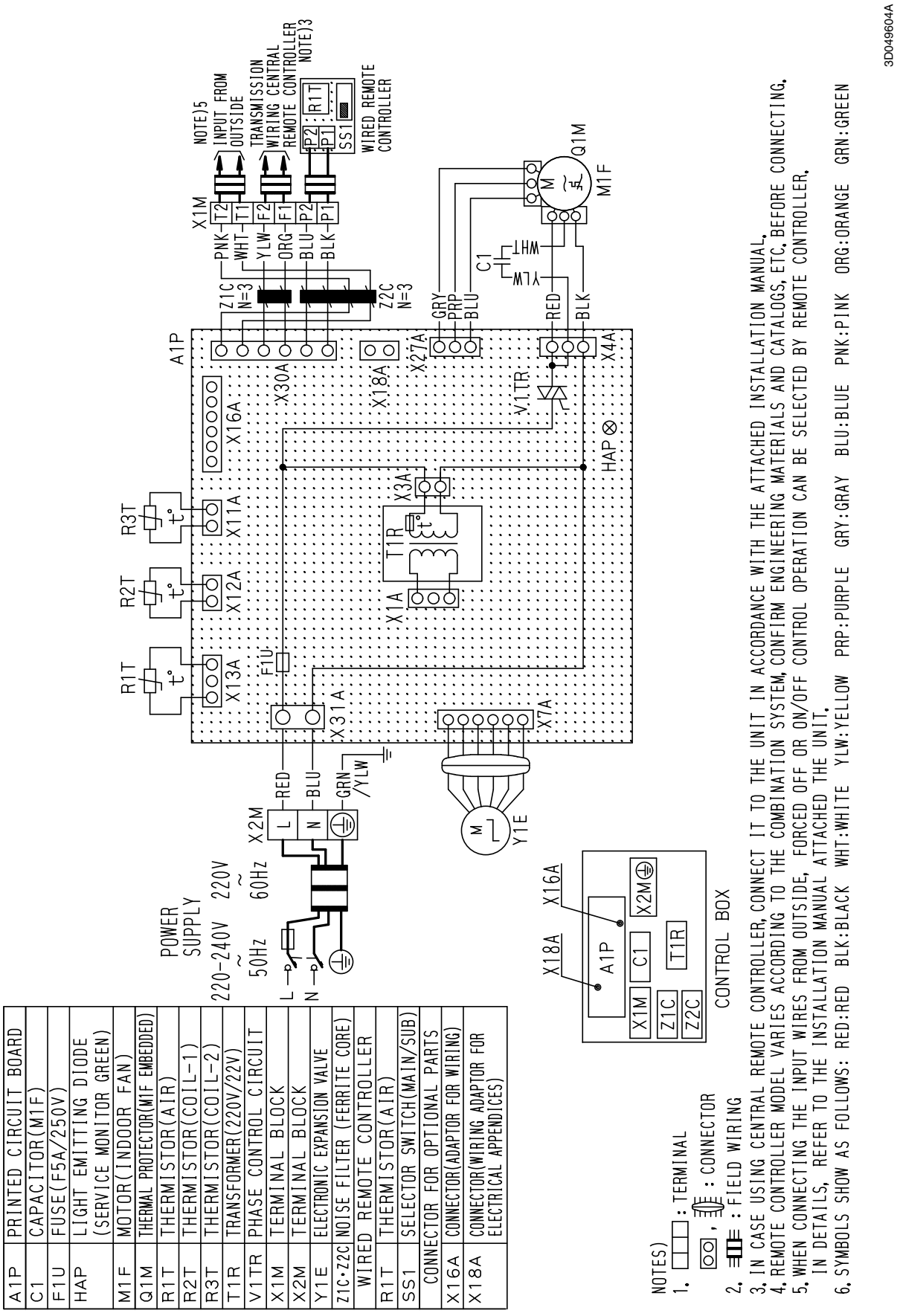

6. Electric Characteristics

6.1 FXDQ-P

Model	Power supply					IFM		Input(W)	
	Hz	Volts	Voltage range	MCA	MFA	KW	FLA	Cooling	Heating
FXDQ20PVE	50	220-240V	Max. 264V Min. 198V	0.8	15	0.062	0.6	86	67
FXDQ25PVE				0.8	15	0.062	0.6	86	67
FXDQ32PVE				0.8	15	0.062	0.6	89	70
FXDQ20PVE	60	220V	Max. 242V Min. 198V	0.9	15	0.062	0.7	92	73
FXDQ25PVE				0.9	15	0.062	0.7	92	73
FXDQ32PVE				0.9	15	0.062	0.7	95	76
FXDQ20PVET	50	220-240V	Max. 264V Min. 198V	0.7	15	0.062	0.6	67	67
FXDQ25PVET				0.7	15	0.062	0.6	67	67
FXDQ32PVET				0.7	15	0.062	0.6	70	70
FXDQ20PVET	60	220V	Max. 242V Min. 198V	0.8	15	0.062	0.7	73	73
FXDQ25PVET				0.8	15	0.062	0.7	73	73
FXDQ32PVET				0.8	15	0.062	0.7	76	76

Symbols:

MCA : Min. Circuit Amps (A)
MFA : Max. Fuse Amps (See note 5)
KW : Fan Motor Rated Output(kW)
FLA : Full Load Amps(A)
IFM : Indoor Fan Motor

Note:

1. Voltage range
   Units are suitable for use on electrical systems where voltage supplied to unit terminals is not below or above listed range limits.
2. Maximum allowable voltage unbalance between phases is 2%.
3. MCA/MFA
   MCA = 1.25 X FLA
   MFA ≦ 4 X FLA
   (Next lower standard fuse rating. Min. 15A)
4. Select wire size based on the MCA.
5. Instead of fuse, use circuit breaker.

C: 4D052138

6.2 FXDQ-N(A)

Model	Power supply					IFM		Input(W)	
	Hz	Volts	Voltage range	MCA	MFA	KW	FLA	Cooling	Heating
FXDQ20NVET	50	220~240V	Max. 264V Min. 198V	0.9	15	0.062	0.7	137	137
FXDQ25NVET				0.9	15	0.062	0.7	137	137
FXDQ32NVET				0.9	15	0.062	0.7	137	137
FXDQ40NVET				1.0	15	0.062	0.8	147	147
FXDQ50NVET				1.0	15	0.13	0.8	152	152
FXDQ63NVET				1.1	15	0.13	0.9	168	168
FXDQ20NVET	60	220V	Max. 242V Min. 198V	1.0	15	0.062	0.8	147	147
FXDQ25NVET				1.0	15	0.062	0.8	147	147
FXDQ32NVET				1.0	15	0.062	0.8	147	147
FXDQ40NVET				1.1	15	0.062	0.9	168	168
FXDQ50NVET				1.3	15	0.13	1.0	170	170
FXDQ63NVET				1.4	15	0.13	1.1	179	179
FXDQ20NAVE	50	220~240V	Max. 264V Min. 198V	0.9	15	0.062	0.7	150	137
FXDQ25NAVE				0.9	15	0.062	0.7	150	137
FXDQ32NAVE				0.9	15	0.062	0.7	150	137
FXDQ40NAVE				1.0	15	0.062	0.8	160	147
FXDQ50NAVE				1.0	15	0.13	0.8	165	152
FXDQ63NAVE				1.1	15	0.13	0.9	181	168
FXDQ20NAVE	60	220V	Max. 242V Min. 198V	1.0	15	0.062	0.8	161	147
FXDQ25NAVE				1.0	15	0.062	0.8	161	147
FXDQ32NAVE				1.0	15	0.062	0.8	161	147
FXDQ40NAVE				1.1	15	0.062	0.9	182	168
FXDQ50NAVE				1.3	15	0.13	1.0	185	170
FXDQ63NAVE				1.4	15	0.13	1.1	192	179

Symbols:
MCA : Min. Circuit Amps (A)
MFA : Max. Fuse Amps (See note 5)
KW : Fan Motor Rated Output(kW)
FLA : Full Load Amps(A)
IFM : Indoor Fan Motor

Note:
1. Voltage range
   Units are suitable for use on electrical systems where voltage supplied to unit terminals is not below or above listed range limits.
2. Maximum allowable voltage unbalance between phases is 2%.
3. MCA/MFA
   MCA = 1.25 X FLA
   MFA ≦ 4 X FLA
   (Next lower standard fuse rating. Min. 15A)
4. Select wire size based on the MCA.
5. Instead of fuse, use circuit breaker.

C : 4D045743B

7. Capacity Tables

7.1 Cooling Capacity

FXDQ-P · N(A) **[50/60Hz]**

Cooling capacity

Unit Size	Outdoor air temp. °CDB	Indoor air temp. 14.0°CWB 20°CDB TC	14.0°CWB 20°CDB SHC	16.0°CWB 23°CDB TC	16.0°CWB 23°CDB SHC	18.0°CWB 26°CDB TC	18.0°CWB 26°CDB SHC	19.0°CWB 27°CDB TC	19.0°CWB 27°CDB SHC	20.0°CWB 28°CDB TC	20.0°CWB 28°CDB SHC	22.0°CWB 30°CDB TC	22.0°CWB 30°CDB SHC	24.0°CWB 32°CDB TC	24.0°CWB 32°CDB SHC
20	10.0	1.5	1.4	1.8	1.6	2.1	1.8	2.2	1.9	2.3	1.9	2.6	1.8	2.9	2.0
	12.0	1.5	1.4	1.8	1.6	2.1	1.8	2.2	1.9	2.3	1.9	2.6	1.8	2.9	1.9
	14.0	1.5	1.4	1.8	1.6	2.1	1.8	2.2	1.9	2.3	1.9	2.6	1.8	2.8	1.9
	16.0	1.5	1.4	1.8	1.6	2.1	1.8	2.2	1.9	2.3	1.9	2.6	1.8	2.8	1.9
	18.0	1.5	1.4	1.8	1.6	2.1	1.8	2.2	1.9	2.3	1.9	2.6	1.8	2.7	1.9
	20.0	1.5	1.4	1.8	1.6	2.1	1.8	2.2	1.9	2.3	1.9	2.6	1.8	2.7	1.9
	21.0	1.5	1.4	1.8	1.6	2.1	1.8	2.2	1.9	2.3	1.9	2.6	1.8	2.7	1.9
	23.0	1.5	1.4	1.8	1.6	2.1	1.8	2.2	1.9	2.3	1.9	2.6	1.8	2.6	1.9
	25.0	1.5	1.4	1.8	1.6	2.1	1.8	2.2	1.9	2.3	1.9	2.6	1.8	2.6	1.9
	27.0	1.5	1.4	1.8	1.6	2.1	1.8	2.2	1.9	2.3	1.9	2.5	1.8	2.5	1.8
	29.0	1.5	1.4	1.8	1.6	2.1	1.8	2.2	1.9	2.3	1.9	2.5	1.8	2.5	1.8
	31.0	1.5	1.4	1.8	1.6	2.1	1.8	2.2	1.9	2.3	1.9	2.4	1.7	2.5	1.8
	33.0	1.5	1.4	1.8	1.6	2.1	1.8	2.2	1.9	2.3	1.9	2.4	1.7	2.4	1.8
	35.0	1.5	1.4	1.8	1.6	2.1	1.8	2.2	1.9	2.3	1.9	2.4	1.7	2.4	1.8
	37.0	1.5	1.4	1.8	1.6	2.1	1.8	2.2	1.9	2.3	1.9	2.3	1.6	2.3	1.8
	39.0	1.5	1.4	1.8	1.6	2.1	1.8	2.2	1.9	2.2	1.9	2.3	1.6	2.3	1.8
25	10.0	1.9	1.6	2.3	1.9	2.6	2.1	2.8	2.1	3.0	2.2	3.4	2.2	3.7	2.3
	12.0	1.9	1.6	2.3	1.9	2.6	2.1	2.8	2.1	3.0	2.2	3.4	2.2	3.6	2.2
	14.0	1.9	1.6	2.3	1.9	2.6	2.1	2.8	2.1	3.0	2.2	3.4	2.2	3.6	2.2
	16.0	1.9	1.6	2.3	1.9	2.6	2.1	2.8	2.1	3.0	2.2	3.4	2.2	3.5	2.2
	18.0	1.9	1.6	2.3	1.9	2.6	2.1	2.8	2.1	3.0	2.2	3.4	2.2	3.4	2.2
	20.0	1.9	1.6	2.3	1.9	2.6	2.1	2.8	2.1	3.0	2.2	3.4	2.2	3.4	2.2
	21.0	1.9	1.6	2.3	1.9	2.6	2.1	2.8	2.1	3.0	2.2	3.4	2.2	3.4	2.1
	23.0	1.9	1.6	2.3	1.9	2.6	2.1	2.8	2.1	3.0	2.2	3.3	2.2	3.3	2.1
	25.0	1.9	1.6	2.3	1.9	2.6	2.1	2.8	2.1	3.0	2.2	3.3	2.2	3.3	2.1
	27.0	1.9	1.6	2.3	1.9	2.6	2.1	2.8	2.1	3.0	2.2	3.2	2.1	3.2	2.1
	29.0	1.9	1.6	2.3	1.9	2.6	2.1	2.8	2.1	3.0	2.2	3.1	2.1	3.2	2.1
	31.0	1.9	1.6	2.3	1.9	2.6	2.1	2.8	2.1	3.0	2.2	3.1	2.1	3.1	2.1
	33.0	1.9	1.6	2.3	1.9	2.6	2.1	2.8	2.1	3.0	2.2	3.0	2.0	3.1	2.0
	35.0	1.9	1.6	2.3	1.9	2.6	2.1	2.8	2.1	2.9	2.2	3.0	2.0	3.0	2.0
	37.0	1.9	1.6	2.3	1.9	2.6	2.1	2.8	2.1	2.9	2.1	2.9	2.0	3.0	2.0
	39.0	1.9	1.6	2.3	1.9	2.6	2.1	2.8	2.1	2.9	2.1	2.9	2.0	3.0	2.0
32	10.0	2.4	2.0	2.9	2.3	3.4	2.4	3.6	2.6	3.8	2.7	4.3	2.8	4.7	2.9
	12.0	2.4	2.0	2.9	2.3	3.4	2.4	3.6	2.6	3.8	2.7	4.3	2.8	4.7	2.9
	14.0	2.4	2.0	2.9	2.3	3.4	2.4	3.6	2.6	3.8	2.7	4.3	2.8	4.6	2.8
	16.0	2.4	2.0	2.9	2.3	3.4	2.4	3.6	2.6	3.8	2.7	4.3	2.8	4.6	2.8
	18.0	2.4	2.0	2.9	2.3	3.4	2.4	3.6	2.6	3.8	2.7	4.3	2.8	4.5	2.8
	20.0	2.4	2.0	2.9	2.3	3.4	2.4	3.6	2.6	3.8	2.7	4.3	2.8	4.4	2.8
	21.0	2.4	2.0	2.9	2.3	3.4	2.4	3.6	2.6	3.8	2.7	4.3	2.8	4.4	2.7
	23.0	2.4	2.0	2.9	2.3	3.4	2.4	3.6	2.6	3.8	2.7	4.2	2.8	4.3	2.7
	25.0	2.4	2.0	2.9	2.3	3.4	2.4	3.6	2.6	3.8	2.7	4.2	2.7	4.3	2.7
	27.0	2.4	2.0	2.9	2.3	3.4	2.4	3.6	2.6	3.8	2.7	4.1	2.7	4.2	2.7
	29.0	2.4	2.0	2.9	2.3	3.4	2.4	3.6	2.6	3.8	2.7	4.1	2.7	4.2	2.6
	31.0	2.4	2.0	2.9	2.3	3.4	2.4	3.6	2.6	3.8	2.7	4.0	2.6	4.1	2.6
	33.0	2.4	2.0	2.9	2.3	3.4	2.4	3.6	2.6	3.8	2.7	3.9	2.6	4.0	2.6
	35.0	2.4	2.0	2.9	2.3	3.4	2.4	3.6	2.6	3.8	2.7	3.9	2.6	4.0	2.5
	37.0	2.4	2.0	2.9	2.3	3.4	2.4	3.6	2.6	3.7	2.6	3.8	2.5	3.9	2.5
	39.0	2.4	2.0	2.9	2.3	3.4	2.4	3.6	2.6	3.7	2.6	3.8	2.5	3.8	2.5

Cooling capacity

Unit Size	Outdoor air temp. °CDB	Indoor air temp. 14.0°CWB 20°CDB TC	14.0°CWB 20°CDB SHC	16.0°CWB 23°CDB TC	16.0°CWB 23°CDB SHC	18.0°CWB 26°CDB TC	18.0°CWB 26°CDB SHC	19.0°CWB 27°CDB TC	19.0°CWB 27°CDB SHC	20.0°CWB 28°CDB TC	20.0°CWB 28°CDB SHC	22.0°CWB 30°CDB TC	22.0°CWB 30°CDB SHC	24.0°CWB 32°CDB TC	24.0°CWB 32°CDB SHC
40	10.0	3.0	2.5	3.6	2.8	4.2	3.3	4.5	3.3	4.8	3.2	5.4	3.3	5.9	3.5
	12.0	3.0	2.5	3.6	2.8	4.2	3.3	4.5	3.3	4.8	3.2	5.4	3.3	5.8	3.5
	14.0	3.0	2.5	3.6	2.8	4.2	3.3	4.5	3.3	4.8	3.2	5.4	3.3	5.8	3.5
	16.0	3.0	2.5	3.6	2.8	4.2	3.3	4.5	3.3	4.8	3.2	5.4	3.3	5.7	3.5
	18.0	3.0	2.5	3.6	2.8	4.2	3.3	4.5	3.3	4.8	3.2	5.4	3.3	5.6	3.4
	20.0	3.0	2.5	3.6	2.8	4.2	3.3	4.5	3.3	4.8	3.2	5.4	3.3	5.5	3.4
	21.0	3.0	2.5	3.6	2.8	4.2	3.3	4.5	3.3	4.8	3.2	5.4	3.3	5.5	3.4
	23.0	3.0	2.5	3.6	2.8	4.2	3.3	4.5	3.3	4.8	3.2	5.3	3.3	5.4	3.3
	25.0	3.0	2.5	3.6	2.8	4.2	3.3	4.5	3.3	4.8	3.2	5.2	3.3	5.3	3.3
	27.0	3.0	2.5	3.6	2.8	4.2	3.3	4.5	3.3	4.8	3.2	5.2	3.2	5.3	3.3
	29.0	3.0	2.5	3.6	2.8	4.2	3.3	4.5	3.3	4.8	3.2	5.1	3.2	5.2	3.3
	31.0	3.0	2.5	3.6	2.8	4.2	3.3	4.5	3.3	4.8	3.2	5.0	3.2	5.1	3.2
	33.0	3.0	2.5	3.6	2.8	4.2	3.3	4.5	3.3	4.8	3.2	4.9	3.2	5.0	3.2
	35.0	3.0	2.5	3.6	2.8	4.2	3.3	4.5	3.3	4.7	3.2	4.9	3.1	4.9	3.1
	37.0	3.0	2.5	3.6	2.8	4.2	3.3	4.5	3.3	4.7	3.2	4.8	3.1	4.8	3.1
	39.0	3.0	2.5	3.6	2.8	4.2	3.3	4.5	3.3	4.6	3.2	4.7	3.1	4.8	3.1
50	10.0	3.8	3.1	4.5	3.5	5.2	3.9	5.6	4.0	6.0	4.0	6.7	4.2	7.4	4.1
	12.0	3.8	3.1	4.5	3.5	5.2	3.9	5.6	4.0	6.0	4.0	6.7	4.2	7.3	4.1
	14.0	3.8	3.1	4.5	3.5	5.2	3.9	5.6	4.0	6.0	4.0	6.7	4.2	7.2	4.1
	16.0	3.8	3.1	4.5	3.5	5.2	3.9	5.6	4.0	6.0	4.0	6.7	4.2	7.1	4.0
	18.0	3.8	3.1	4.5	3.5	5.2	3.9	5.6	4.0	6.0	4.0	6.7	4.2	7.0	4.0
	20.0	3.8	3.1	4.5	3.5	5.2	3.9	5.6	4.0	6.0	4.0	6.7	4.2	6.9	4.0
	21.0	3.8	3.1	4.5	3.5	5.2	3.9	5.6	4.0	6.0	4.0	6.7	4.2	6.8	4.0
	23.0	3.8	3.1	4.5	3.5	5.2	3.9	5.6	4.0	6.0	4.0	6.6	4.2	6.7	3.9
	25.0	3.8	3.1	4.5	3.5	5.2	3.9	5.6	4.0	6.0	4.0	6.5	4.1	6.6	3.9
	27.0	3.8	3.1	4.5	3.5	5.2	3.9	5.6	4.0	6.0	4.0	6.4	4.1	6.6	3.9
	29.0	3.8	3.1	4.5	3.5	5.2	3.9	5.6	4.0	6.0	4.0	6.3	4.0	6.5	3.8
	31.0	3.8	3.1	4.5	3.5	5.2	3.9	5.6	4.0	6.0	4.0	6.2	4.0	6.4	3.8
	33.0	3.8	3.1	4.5	3.5	5.2	3.9	5.6	4.0	6.0	4.0	6.1	4.0	6.3	3.8
	35.0	3.8	3.1	4.5	3.5	5.2	3.9	5.6	4.0	5.9	4.0	6.0	3.9	6.2	3.7
	37.0	3.8	3.1	4.5	3.5	5.2	3.9	5.6	4.0	5.8	4.0	5.9	3.9	6.1	3.7
	39.0	3.8	3.1	4.5	3.5	5.2	3.9	5.6	4.0	5.7	3.9	5.8	3.9	6.0	3.7
63	10.0	4.8	3.8	5.7	4.3	6.6	4.8	7.1	4.9	7.6	4.9	8.5	5.1	9.3	5.7
	12.0	4.8	3.8	5.7	4.3	6.6	4.8	7.1	4.9	7.6	4.9	8.5	5.1	9.2	5.6
	14.0	4.8	3.8	5.7	4.3	6.6	4.8	7.1	4.9	7.6	4.9	8.5	5.1	9.1	5.5
	16.0	4.8	3.8	5.7	4.3	6.6	4.8	7.1	4.9	7.6	4.9	8.5	5.1	9.0	5.4
	18.0	4.8	3.8	5.7	4.3	6.6	4.8	7.1	4.9	7.6	4.9	8.5	5.1	8.8	5.4
	20.0	4.8	3.8	5.7	4.3	6.6	4.8	7.1	4.9	7.6	4.9	8.5	5.1	8.7	5.3
	21.0	4.8	3.8	5.7	4.3	6.6	4.8	7.1	4.9	7.6	4.9	8.5	5.1	8.7	5.3
	23.0	4.8	3.8	5.7	4.3	6.6	4.8	7.1	4.9	7.6	4.9	8.4	5.1	8.5	5.2
	25.0	4.8	3.8	5.7	4.3	6.6	4.8	7.1	4.9	7.6	4.9	8.3	5.0	8.4	5.1
	27.0	4.8	3.8	5.7	4.3	6.6	4.8	7.1	4.9	7.6	4.9	8.1	5.0	8.3	5.1
	29.0	4.8	3.8	5.7	4.3	6.6	4.8	7.1	4.9	7.6	4.9	8.0	4.9	8.2	5.0
	31.0	4.8	3.8	5.7	4.3	6.6	4.8	7.1	4.9	7.6	4.9	7.9	4.9	8.1	4.9
	33.0	4.8	3.8	5.7	4.3	6.6	4.8	7.1	4.9	7.6	4.9	7.8	4.8	7.9	4.9
	35.0	4.8	3.8	5.7	4.3	6.6	4.8	7.1	4.9	7.5	4.8	7.7	4.8	7.8	4.8
	37.0	4.8	3.8	5.7	4.3	6.6	4.8	7.1	4.9	7.4	4.8	7.5	4.7	7.7	4.8
	39.0	4.8	3.8	5.7	4.3	6.6	4.8	7.1	4.9	7.2	4.7	7.4	4.7	7.6	4.7

TC Total capacity ; kW
SHC Sensible heat capacity ; kW

Refer to Outdoor Unit Capacity Tables : on page 339~, for the actual performance data of each indoor and outdoor unit combination.

7.2 Heating Capacity

FXDQ-P · N(A) **[50/60Hz]**

Heating capacity

Unit Size	Outdoor air temp. °CDB	Outdoor air temp. °CWB	Indoor air temp. °CDB 16.0 kW	18.0 kW	20.0 kW	21.0 kW	22.0 kW	24.0 kW
20	-19.8	-20.0	1.5	1.5	1.5	1.5	1.5	1.5
	-18.8	-19.0	1.5	1.5	1.5	1.5	1.5	1.5
	-16.7	-17.0	1.6	1.6	1.6	1.6	1.6	1.6
	-14.7	-15.0	1.7	1.7	1.7	1.7	1.7	1.7
	-12.6	-13.0	1.8	1.8	1.8	1.8	1.8	1.8
	-10.5	-11.0	1.9	1.9	1.9	1.9	1.9	1.9
	-9.5	-10.0	1.9	1.9	1.9	1.9	1.9	1.9
	-8.5	-9.1	2.0	2.0	1.9	1.9	1.9	1.9
	-7.0	-7.6	2.0	2.0	2.0	2.0	2.0	2.0
	-5.0	-5.6	2.1	2.1	2.1	2.1	2.1	2.0
	-3.0	-3.7	2.2	2.2	2.2	2.2	2.2	2.1
	0.0	-0.7	2.3	2.3	2.3	2.3	2.2	2.2
	3.0	2.2	2.5	2.5	2.4	2.4	2.3	2.2
	5.0	4.1	2.6	2.6	2.5	2.5	2.3	2.2
	7.0	6.0	2.7	2.7	2.5	2.4	2.3	2.2
	9.0	7.9	2.8	2.7	2.5	2.4	2.3	2.2
	11.0	9.8	2.8	2.7	2.5	2.4	2.3	2.2
	13.0	11.8	2.8	2.7	2.5	2.4	2.3	2.2
	15.0	13.7	2.8	2.7	2.5	2.4	2.3	2.2
25	-19.8	-20.0	1.9	1.9	1.9	1.9	1.9	1.9
	-18.8	-19.0	1.9	1.9	1.9	1.9	1.9	1.9
	-16.7	-17.0	2.1	2.1	2.0	2.0	2.0	2.0
	-14.7	-15.0	2.2	2.2	2.2	2.2	2.2	2.1
	-12.6	-13.0	2.3	2.3	2.3	2.3	2.3	2.3
	-10.5	-11.0	2.4	2.4	2.4	2.4	2.4	2.4
	-9.5	-10.0	2.5	2.5	2.5	2.5	2.5	2.4
	-8.5	-9.1	2.5	2.5	2.5	2.5	2.5	2.5
	-7.0	-7.6	2.6	2.6	2.6	2.6	2.6	2.6
	-5.0	-5.6	2.7	2.7	2.7	2.7	2.7	2.7
	-3.0	-3.7	2.8	2.8	2.8	2.8	2.8	2.8
	0.0	-0.7	3.0	3.0	3.0	3.0	3.0	2.8
	3.0	2.2	3.1	3.1	3.2	3.1	3.0	2.8
	5.0	4.1	3.3	3.2	3.2	3.1	3.0	2.8
	7.0	6.0	3.4	3.4	3.2	3.1	3.0	2.8
	9.0	7.9	3.5	3.4	3.2	3.1	3.0	2.8
	11.0	9.8	3.6	3.4	3.2	3.1	3.0	2.8
	13.0	11.8	3.6	3.4	3.2	3.1	3.0	2.8
	15.0	13.7	3.6	3.4	3.2	3.1	3.0	2.8
32	-19.8	-20.0	2.4	2.4	2.3	2.3	2.3	2.3
	-18.8	-19.0	2.4	2.4	2.4	2.4	2.4	2.4
	-16.7	-17.0	2.6	2.6	2.6	2.6	2.6	2.5
	-14.7	-15.0	2.7	2.7	2.7	2.7	2.7	2.7
	-12.6	-13.0	2.9	2.8	2.8	2.8	2.8	2.8
	-10.5	-11.0	3.0	3.0	3.0	3.0	3.0	3.0
	-9.5	-10.0	3.1	3.1	3.1	3.1	3.0	3.0
	-8.5	-9.1	3.1	3.1	3.1	3.1	3.1	3.1
	-7.0	-7.6	3.2	3.2	3.2	3.2	3.2	3.2
	-5.0	-5.6	3.4	3.4	3.4	3.4	3.4	3.4
	-3.0	-3.7	3.5	3.5	3.5	3.5	3.5	3.5
	0.0	-0.7	3.7	3.7	3.7	3.7	3.7	3.5
	3.0	2.2	3.9	3.9	4.0	3.9	3.7	3.5
	5.0	4.1	4.2	4.1	4.0	3.9	3.7	3.5
	7.0	6.0	4.2	4.2	4.0	3.9	3.7	3.5
	9.0	7.9	4.3	4.3	4.0	3.9	3.7	3.5
	11.0	9.8	4.5	4.3	4.0	3.9	3.7	3.5
	13.0	11.8	4.5	4.3	4.0	3.9	3.7	3.5
	15.0	13.7	4.5	4.3	4.0	3.9	3.7	3.5

Heating capacity

Unit Size	Outdoor air temp. °CDB	Outdoor air temp. °CWB	Indoor air temp. °CDB 16.0 kW	18.0 kW	20.0 kW	21.0 kW	22.0 kW	24.0 kW
40	-19.8	-20.0	3.0	2.9	2.9	2.9	2.9	2.9
	-18.8	-19.0	3.0	3.0	3.0	3.0	3.0	3.0
	-16.7	-17.0	3.2	3.2	3.2	3.2	3.2	3.2
	-14.7	-15.0	3.4	3.4	3.4	3.4	3.4	3.4
	-12.6	-13.0	3.6	3.6	3.6	3.5	3.5	3.5
	-10.5	-11.0	3.7	3.7	3.7	3.7	3.7	3.7
	-9.5	-10.0	3.8	3.8	3.8	3.8	3.8	3.8
	-8.5	-9.1	3.9	3.9	3.9	3.8	3.9	3.9
	-7.0	-7.6	4.0	4.0	4.0	4.0	4.0	4.0
	-5.0	-5.6	4.2	4.2	4.2	4.2	4.2	4.2
	-3.0	-3.7	4.4	4.4	4.4	4.4	4.4	4.4
	0.0	-0.7	4.7	4.6	4.6	4.6	4.6	4.4
	3.0	2.2	4.9	4.9	4.8	4.8	4.7	4.4
	5.0	4.1	5.1	5.1	5.0	4.8	4.7	4.4
	7.0	6.0	5.2	5.2	5.0	4.8	4.7	4.4
	9.0	7.9	5.4	5.3	5.0	4.8	4.7	4.4
	11.0	9.8	5.6	5.3	5.0	4.8	4.7	4.4
	13.0	11.8	5.6	5.3	5.0	4.8	4.7	4.4
	15.0	13.7	5.6	5.3	5.0	4.8	4.7	4.4
50	-19.8	-20.0	3.7	3.7	3.7	3.7	3.7	3.7
	-18.8	-19.0	3.8	3.8	3.8	3.8	3.8	3.8
	-16.7	-17.0	4.1	4.0	4.0	4.0	4.0	4.0
	-14.7	-15.0	4.3	4.3	4.3	4.2	4.2	4.2
	-12.6	-13.0	4.5	4.5	4.5	4.5	4.5	4.5
	-10.5	-11.0	4.7	4.7	4.7	4.7	4.7	4.7
	-9.5	-10.0	4.8	4.8	4.8	4.8	4.8	4.8
	-8.5	-9.1	4.9	4.9	4.9	4.9	4.9	4.9
	-7.0	-7.6	5.1	5.1	5.1	5.1	5.1	5.1
	-5.0	-5.6	5.3	5.3	5.3	5.3	5.3	5.3
	-3.0	-3.7	5.5	5.5	5.5	5.5	5.5	5.5
	0.0	-0.7	5.9	5.9	5.8	5.8	5.8	5.5
	3.0	2.2	6.2	6.2	6.2	6.1	5.9	5.5
	5.0	4.1	6.4	6.4	6.3	6.1	5.9	5.5
	7.0	6.0	6.6	6.6	6.3	6.1	5.9	5.5
	9.0	7.9	6.8	6.7	6.3	6.1	5.9	5.5
	11.0	9.8	7.0	6.7	6.3	6.1	5.9	5.5
	13.0	11.8	7.1	6.7	6.3	6.1	5.9	5.5
	15.0	13.7	7.1	6.7	6.3	6.1	5.9	5.5
63	-19.8	-20.0	4.7	4.7	4.7	4.7	4.7	4.7
	-18.8	-19.0	4.9	4.9	4.8	4.8	4.8	4.8
	-16.7	-17.0	5.1	5.1	5.1	5.1	5.1	5.1
	-14.7	-15.0	5.4	5.4	5.4	5.4	5.4	5.4
	-12.6	-13.0	5.7	5.7	5.7	5.7	5.7	5.7
	-10.5	-11.0	6.0	6.0	6.0	6.0	6.0	5.9
	-9.5	-10.0	6.1	6.1	6.1	6.1	6.1	6.1
	-8.5	-9.1	6.3	6.3	6.2	6.2	6.2	6.2
	-7.0	-7.6	6.5	6.5	6.4	6.4	6.4	6.4
	-5.0	-5.6	6.8	6.7	6.7	6.7	6.7	6.7
	-3.0	-3.7	7.0	7.0	7.0	7.0	7.0	7.0
	0.0	-0.7	7.5	7.4	7.4	7.4	7.4	7.0
	3.0	2.2	7.9	7.8	7.8	7.7	7.5	7.0
	5.0	4.1	8.1	8.1	8.0	7.7	7.5	7.0
	7.0	6.0	8.4	8.4	8.0	7.7	7.5	7.0
	9.0	7.9	8.7	8.5	8.0	7.7	7.5	7.0
	11.0	9.8	8.9	8.5	8.0	7.7	7.5	7.0
	13.0	11.8	9.0	8.5	8.0	7.7	7.5	7.0
	15.0	13.7	9.0	8.5	8.0	7.7	7.5	7.0

Refer to Outdoor Unit Capacity Tables : on page 342~, for the actual performance data of each indoor and outdoor unit combination.

8. Fan Performances

8.1 FXDQ-P

FXDQ20P · 25PVE(T)

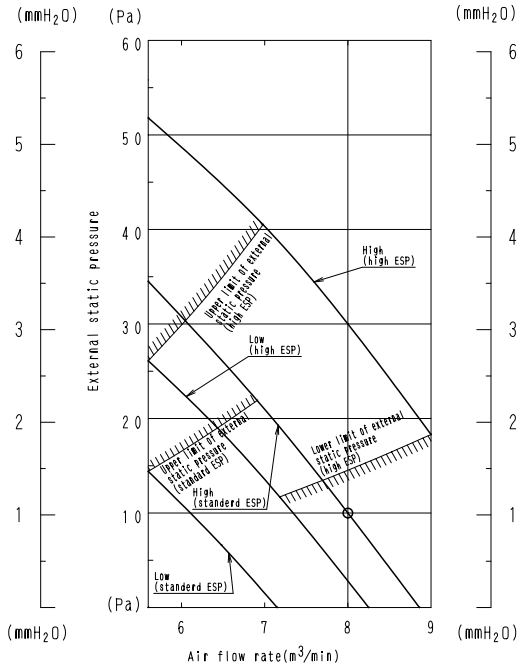

3D052156

FXDQ32PVE(T)

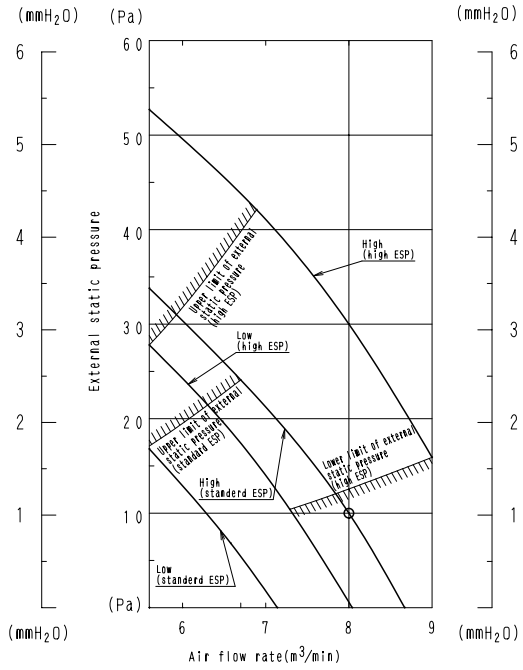

3D052157

Notes:

1. The remote controller can be used to switch between “high” and “low”.
2. The air flow is set to “standard” before leaving the factory.
   It is possible to switch between “standard ESP” and “high ESP” by the remote controller.

8.2 FXDQ-N(A)

FXDQ20 · 25N(A)VE(T)

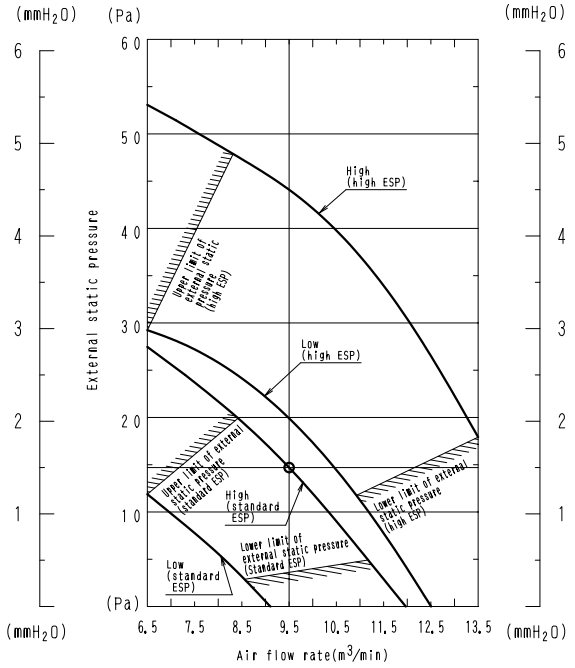

FXDQ32N(A)VE(T)

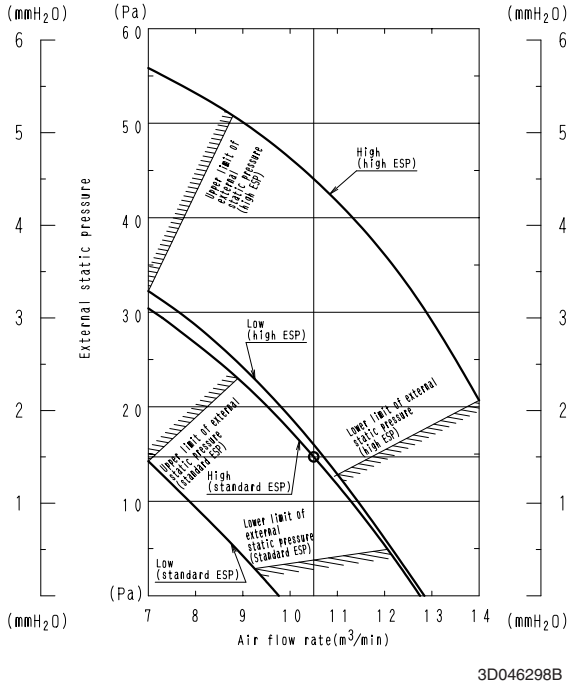

FXDQ40N(A)VE(T)

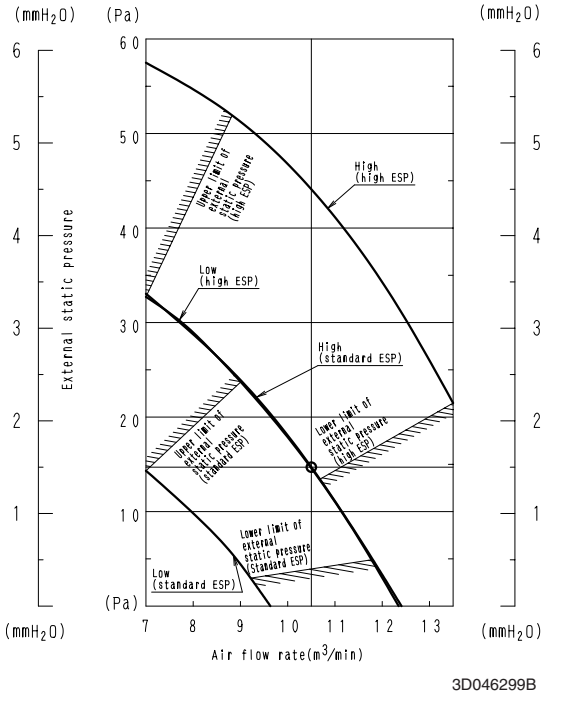

FXDQ50N(A)VE(T)

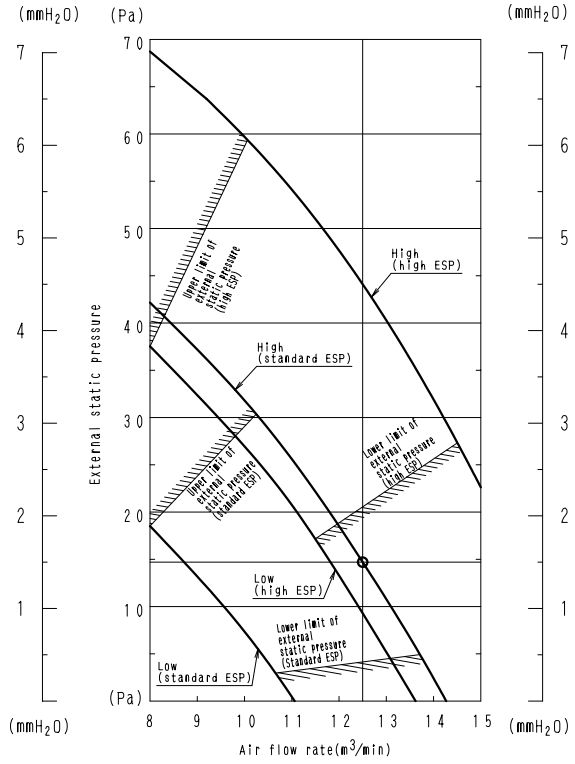

Note:

1. The remote controller can be used to switch between “high” and “low”.
2. The air flow is set to “standard” before leaving the factory.
   It is possible to switch between “standard ESP” and “high ESP” by the remote controller.

FXDQ63N(A)VE(T)

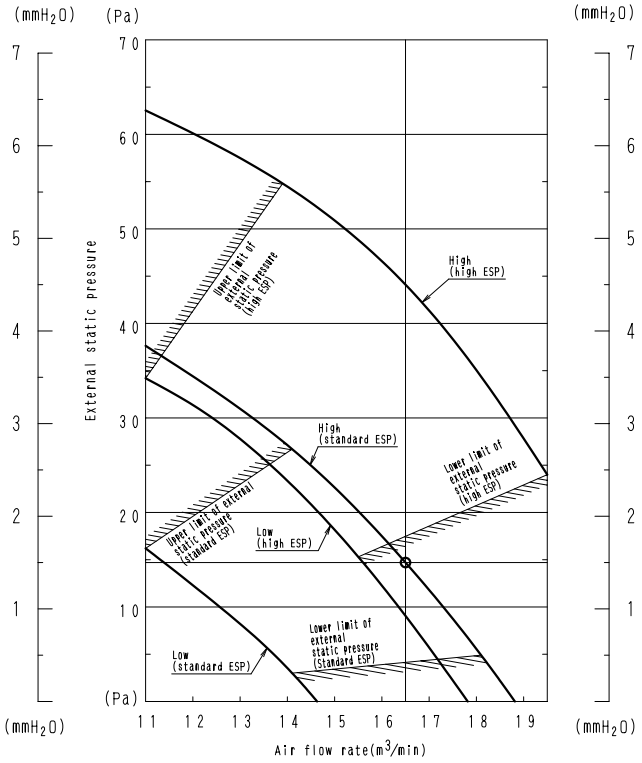

Note:

1. The remote controller can be used to switch between “high” and “low”.
2. The air flow is set to “standard” before leaving the factory.
   It is possible to switch between “standard ESP” and “high ESP” by the remote controller.

9. Sound Levels

9.1 FXDQ-P

Overall

■ **Slim Ceiling Mounted Duct Type**

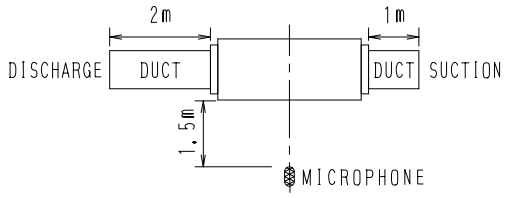

4D052164

Notes:

1. The operating conditions are assumed to be standard (JIS conditions)
2. These operating values were obtained in a dead room (conversion values).
   Sound level will vary depending on a range of factors such as the construction (acoustic absorption coefficient) of the particular room in which the equipments installed.

dBA

Model	220~240V, 50 / 60Hz	
	H	L
FXDQ20PVE(T)	33	29
FXDQ25PVE(T)	33	29
FXDQ32PVE(T)	33	29

Octave Band Level

○——○ 220V~240V

FXDQ20PVE(T)

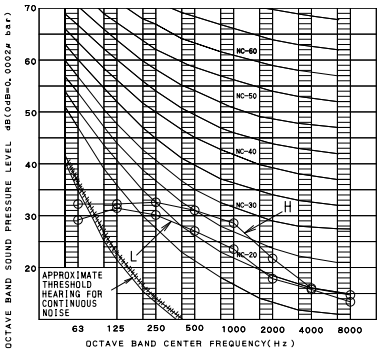

4D052164

FXDQ25PVE(T)

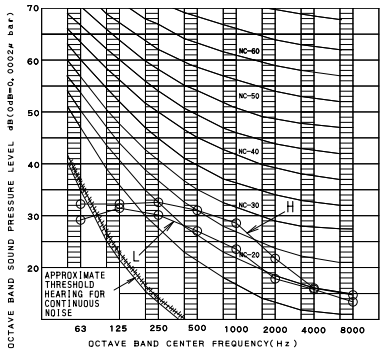

4D052165

FXDQ32PVE(T)

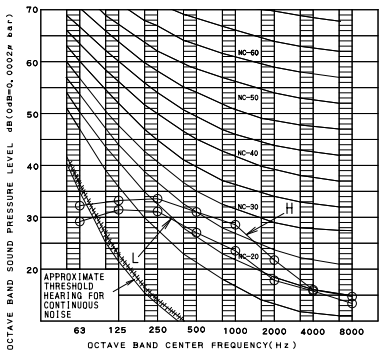

4D052166

9.2 FXDQ-N(A)

Overall

■ **Slim Ceiling Mounted Duct Type**

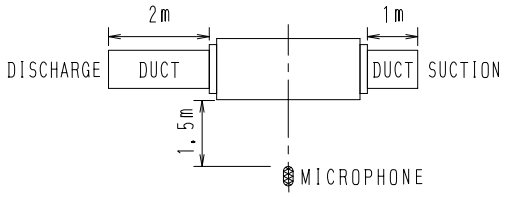

Note:

1. The operating conditions are assumed to be standard (JIS conditions).
2. These operating values were obtained in a dead room (conversion values).
   Sound level will vary depending on a range of factors such as the construction (acoustic absorption coefficient) of the particular room in which the equipments installed.

dBA

Model	220~240V, 50/60Hz	
	H	L
FXDQ20N(A)VE(T)	33	29
FXDQ25N(A)VE(T)	33	29
FXDQ32N(A)VE(T)	33	29
FXDQ40N(A)VE(T)	34	30
FXDQ50N(A)VE(T)	35	31
FXDQ63N(A)VE(T)	36	32

Octave Band Level

○——○ 220V~240V 50/60Hz

FXDQ20N(A)VE(T)

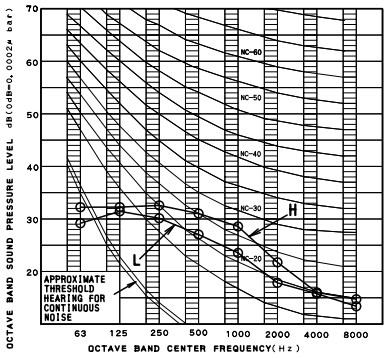

4D046281B

FXDQ25N(A)VE(T)

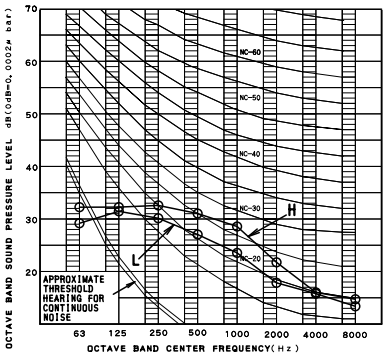

4D046282B

FXDQ32N(A)VE(T)

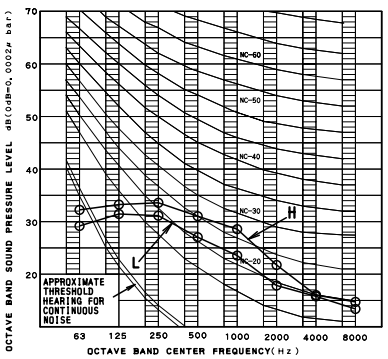

4D046283B

FXDQ40N(A)VE(T)

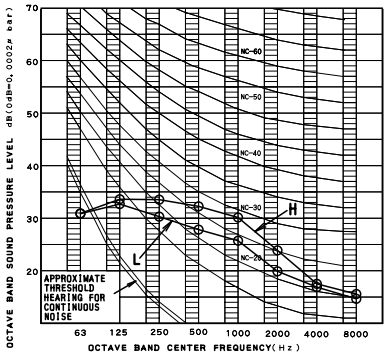

4D046284B

FXDQ50N(A)VE(T)

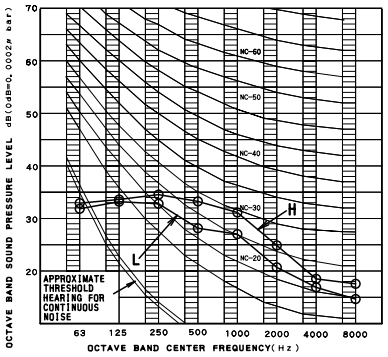

4D046285B

FXDQ63N(A)VE(T)

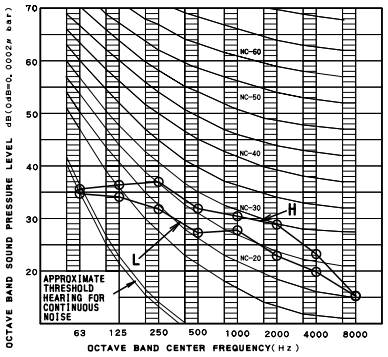

4D046286B

10. Installation

10.1 FXDQ-P

Center of Gravity
FXDQ20P · 25P · 32PVE(T)

Unit (mm)

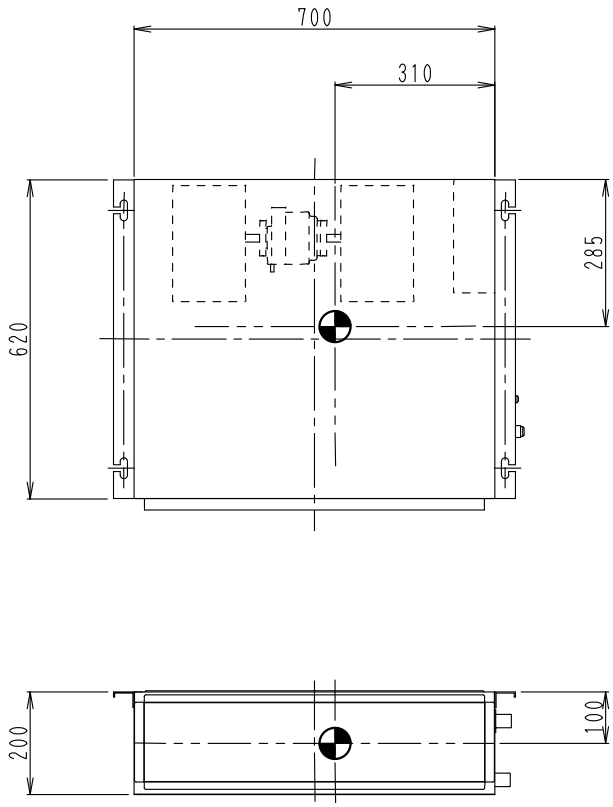

4D049300C

10.2 FXDQ-N(A)

Center of Gravity
FXDQ20N(A) · 25N(A) · 32N(A) · 40N(A) · 50N(A)VE(T)

Unit (mm)

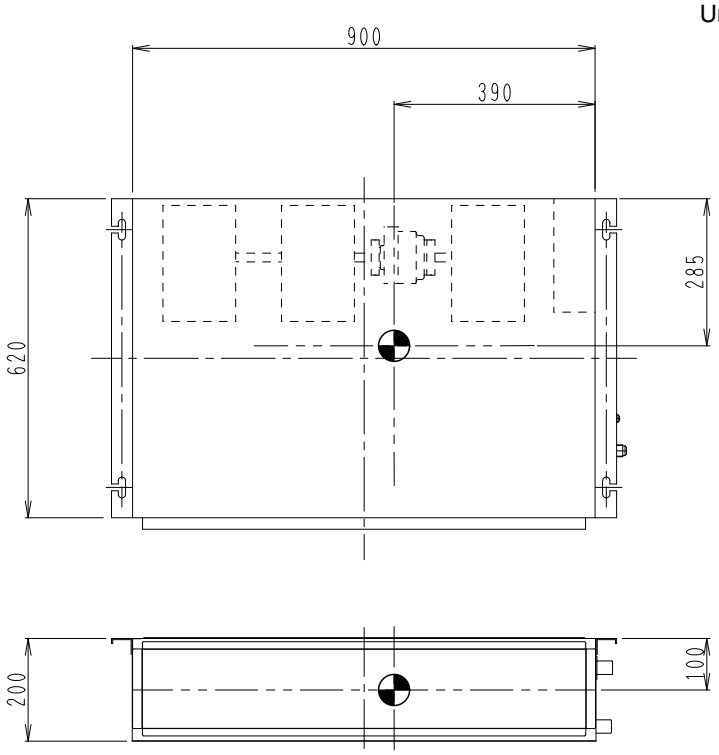

4D043886H

FXDQ63N(A)VE(T)

Unit (mm)

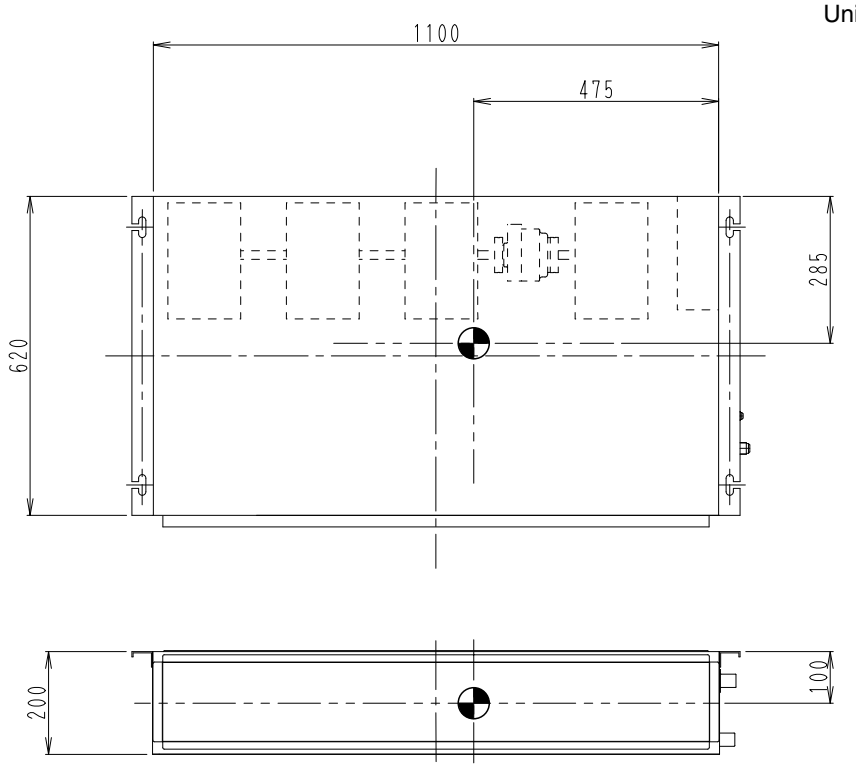

4D043887G

Service Space

1. **Select an installation site where the following conditions are fulfilled and that meets with your customer's approval.**

- Where optimum air distribution can be ensured.
- Where nothing blocks air passage.
- Where condensate can be properly drained.
- Where the ceiling is strong enough to bear the indoor unit weight.
- Where the false ceiling is not noticeably on an incline.
- Where there is no risk of flammable gas leakage.
- Where sufficient clearance for maintenance and service can be ensured. **(Refer to Fig. 1)**
- Where piping between indoor and outdoor units is possible within the allowable limit. (Refer to the installation manual for the outdoor unit.)

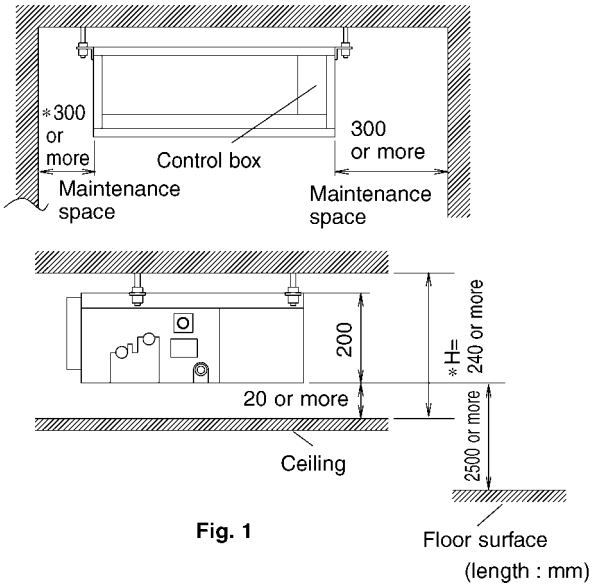

Fig. 1

- Select the ∗H dimension such that a downward slope of at least 1/100 is ensured as indicated in "**DRAIN PIPING WORK**".
- The maintenance space marked with "∗" is required when the installation box for adaptor PC board (KRP1B101) sold separately is used.

[PRECAUTION]

- Install the indoor and outdoor units, power supply wiring and connecting wires at least 1 meter away from televisions or radios in order to prevent image interference or noise. (Depending on the radio waves, a distance of 1 meter may not be sufficient enough to eliminate the noise.)
- If installing the wireless kit in a room with electronic fluorescent lighting (inverter or rapid start type), the remote controller's transmission distance may be shortened. Indoor units should be installed as far away from fluorescent lighting as possible.

2. **Use suspension bolts for installation. Check whether the ceiling is strong enough to support the weight of the unit or not. If there is a risk, reinforce the ceiling before installing the unit.**
   (Installation pitch is marked on the carton box for installation. Refer to it to check for points requiring reinforcing.)

Bolt Pitch

1. **Confirm the positional relationship between the unit and suspension bolts. (Refer to Fig. 2)**

■ Install the inspection opening on the control box side where maintenance and inspection of the control box and drain pump are easy. Install the inspection opening also in the lower part of the unit.

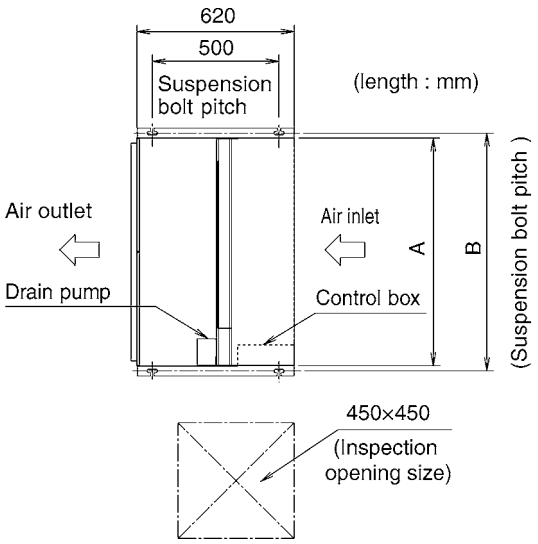

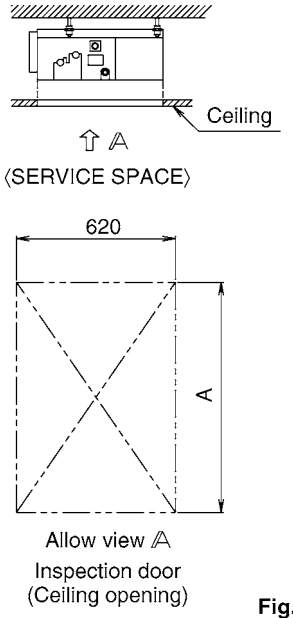

Fig. 2

(length: mm)

Model	A	B
20 · 25 · 32PVE type	700	740
20 · 25 · 32 · 40 · 50N(A) type	900	940
63N(A) type	1100	1140

2. **Make sure the range of the unit's external static pressure is not exceeded.**
   (See the technical documentation for the range of the external static pressure setting.)
3. **Open the installation hole. (Pre-set ceilings)**

■ Once the installation hole is opened in the ceiling where the unit is to be installed, pass refrigerant piping, drain piping, transmission wiring, and remote controller wiring (It is not necessary if using a wireless remote controller) to the unit's piping and wiring holes.
See "**DRAIN PIPING WORK**".

■ After opening the ceiling hole, make sure ceiling is level if needed. It might be necessary to reinforce the ceiling frame to prevent shaking. Consult an architect or carpenter for details.

4. **Install the suspension bolts.**
   (Use W3/8 to M10 suspension bolts.)
   Use a hole-in-anchor for existing ceilings, and a sunken insert, sunken anchor or other part to be procured in the field to reinforce the ceiling to bearing the weight of the unit for new ceiling. (**Refer to Fig. 3**)

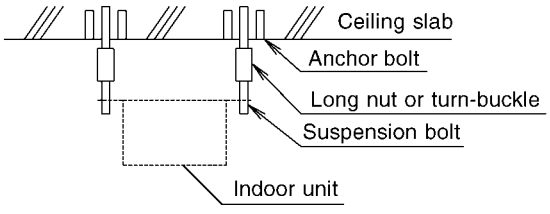

Note: All the above parts are field supplied.

Fig. 3

5. For bottom intake, replace the chamber lid in the procedure listed in Fig. 4.

FXDQ-P

For bottom intake, replace the chamber lid and protection net in the procedure listed in Fig. 4.

(1) Remove the protection net. (6 locations)
Remove the chamber lid. (7 locations)
(2) Refer to Fig. 4 for the direction of the chamber lid. (7 locations)
Refer to Fig. 4 for the direction of the protection net. (6 locations)
(3) Attach the air filter (accessory) in the manner shown in the diagram.
The four holes which cannot be covered by the air filter should be covered with commercially available tape.

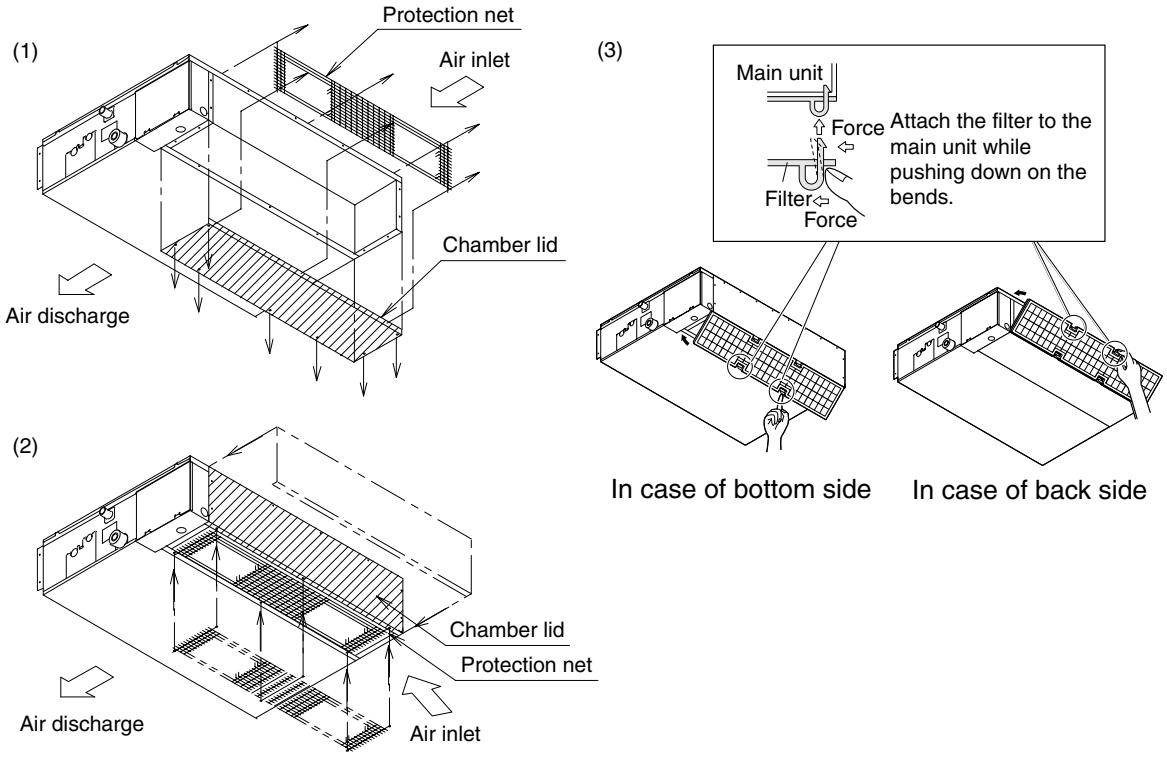

Fig. 4

FXDQ-N(A)

(1) Remove the chamber lid. (7 locations)
(2) Reattached the removed chamber lid in the orientation shown in Fig. 4. (7 locations)

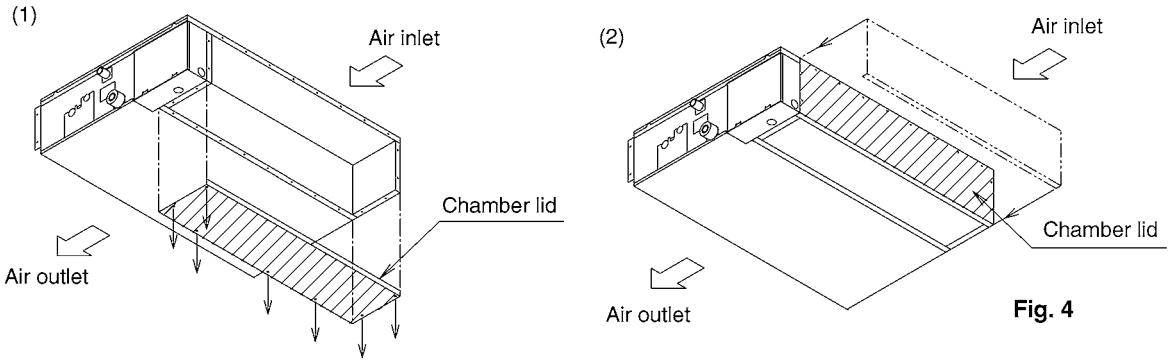

Fig. 4

(3) Attach the air filter (accessory) in the manner shown in the diagram. The four holes which cannot be covered by the air filter should be covered with commercially available tape.

(3)

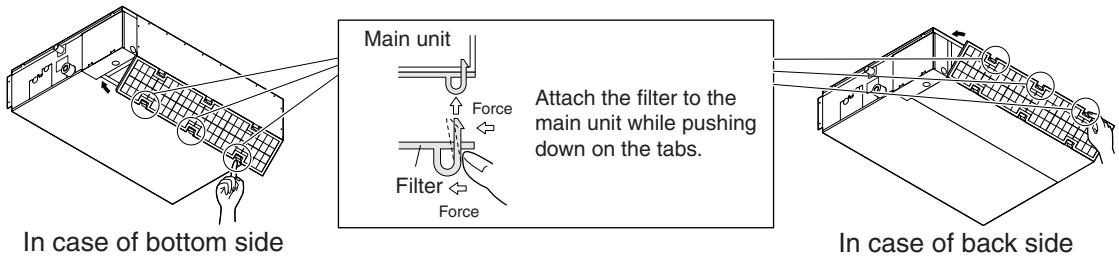

Indoor Unit Installation

<<As for the parts to be used for installation work, be sure to use the provided accessories and specified parts designated by our company.>>

1. Install the indoor unit temporarily.

- Attach the hanger bracket to the suspension bolt. Be sure to fix it securely by using a nut and washer from the upper and lower sides of the hanger bracket. **(Refer to Fig. 5)**

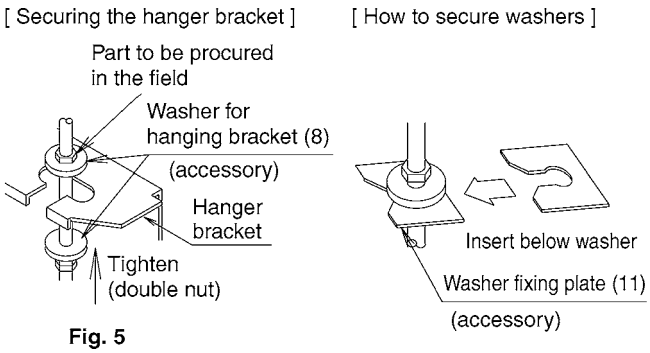

Fig. 5

[PRECAUTION]

Since the unit uses a plastic drain pan, prevent welding spatter and other foreign substances from entering the air outlet during installation.

2. Adjust the height of the unit.

3. Check the unit is level.

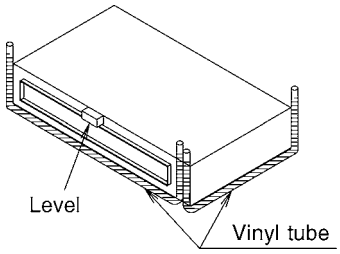

⚠ CAUTION

- **Make sure the unit is installed level using a level or a plastic tube filled with water. In using a plastic tube instead of a level, adjust the top surface of the unit to the surface of the water at both ends of the plastic tube and adjust the unit horizontally. (One thing to watch out for in particular is if the unit is installed so that the slope is not in the direction of the drain piping, this might cause leaking.)**

4. Tighten the upper nut.

Drain Piping Work

1. Install the drain piping.

In case of PVE, NAVE (with Drain Pump) Type

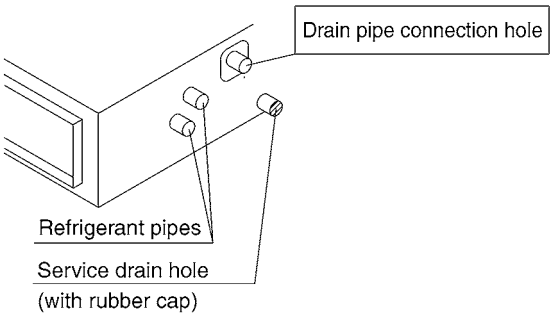

In case of PVET, NVET (without Drain Pump) Type

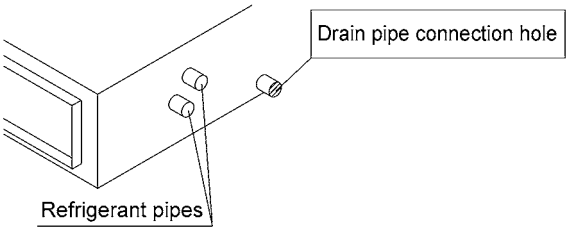

Connect the drain pipe after removing the rubber cap and insulation tubing attached to the connection hole.

- Make sure the drain works properly.
- The diameter of the drain piping should be greater than or equal to the diameter of the connecting pipe (vinyl tube; pipe size: 20 mm; outer dimension: 26 mm).
  (not including the riser)
- Keep the drain pipe short and sloping downwards at a gradient of at least 1/100 to prevent air pockets from forming. **(Refer to Fig. 10)**

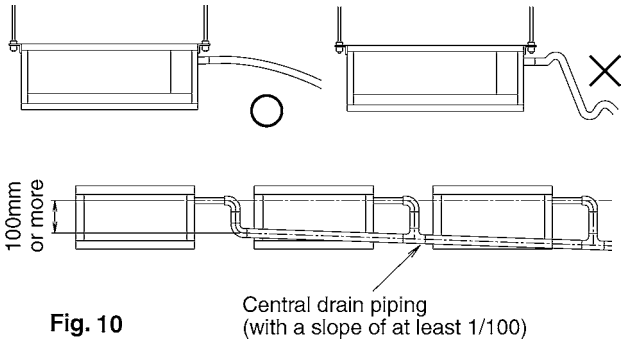

Fig. 10

CAUTION

Water accumulating in the drain piping can cause the drain to clog.

- To keep the drain piping from sagging, space hanging bracket every 1 to 1.5 m.
- Use the drain hose (2) and the metal clamp (1). Insert the drain hose (2) fully into the drain pipe connection hole and firmly tighten the metal clamp (1) with the upper part of the tape on the hose end. Tighten the metal clamp (1) until the screw head is less than 4 mm from the hose. **(Refer to Fig. 11, 12)**
- The two areas below should be insulated because condensation may form there causing water to leak.
  - Drain piping passing indoors
  - Drain pipe connection hole

  Referring the figure below, insulate the metal clamp (1) and drain hose (2) using the included large sealing pad (5). **(Refer to Fig. 12)**

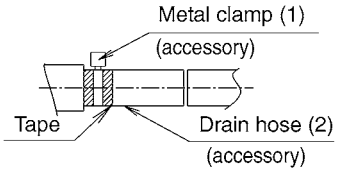

Fig. 11

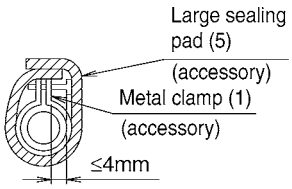

Fig. 12

In case of PVE · NAVE (with Drain Pump) Type

<PRECAUTIONS FOR DRAIN RAISING PIPE>

- Make sure the drain raising pipe height is no higher than 600mm.
- Place the drain raising pipe vertically and make sure it is no further than 300mm from the unit. **(Refer to Fig. 13)**

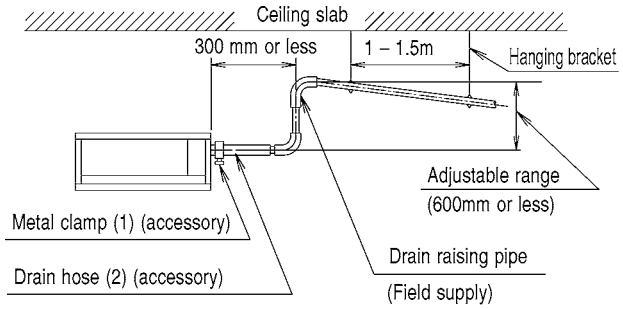

Fig. 13

<PRECAUTIONS>

Drain piping connections

- Do not connect the drain piping directly to sewage pipes that smell of ammonia. The ammonia in the sewage might enter the indoor unit through the drain piping and corrode the heat exchanger.
- Do not twist or bend the drain hose (2), so that excessive force is not applied to it. (This type of treatment may cause leaking.)
- If you are using central drain piping, follow the procedure outlined in the figure 10.
- Select central drain piping of proper size according to the capacity of the connected unit.

2. After piping work is finished, check drainage flows smoothly.

- Gradually insert approximately 1L of water into the drain pan to check drainage in the manner described below

In case of PVET · NVET (without Drain Pump) Type

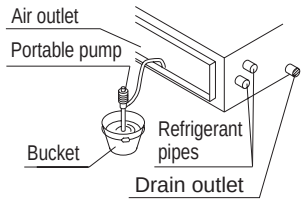

- Gradually pour approximately 1L of water from the outlet hole into the drain pan to check drainage.
- Check the drainage

In case of PVE · NAVE (with Drain Pump) Type

CAUTION

- The electric wiring work shall be performed by qualified electricians.
- If workers not having the electrician qualification have performed the electric wiring work, the steps 3 to 7 shall be performed after the **TEST RUN**.

1. Remove the lid of the control box. Connect the remote controller and power supply (single-phase, 50 Hz 220-240 V or single-phase, 60Hz 220V) respectively to the terminal block and securely connect the ground also (as shown in the figure below).

CAUTION

Securely clamp the cables with the clamps (9)(10) offered as accessories as shown in Fig. 14 so that tension will not be applied on the cable connection areas.

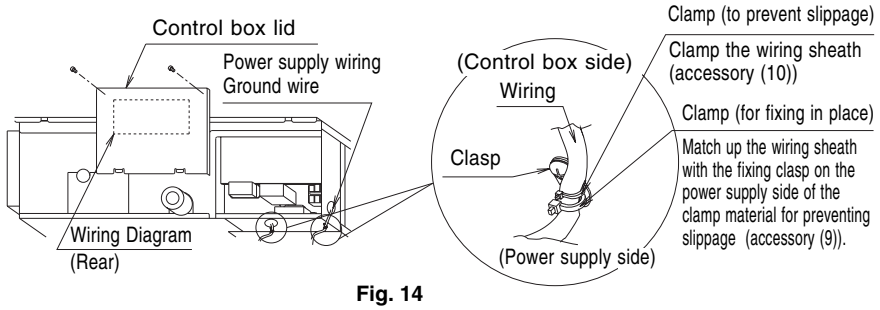

Fig. 14

2. Confirm that the lid of the control box is closed before turning on the power.
3. Remove the inspection lid.
4. Gradually pour approximately 1,000 cc of water from the water inlet into the drain pan to check drainage.

CAUTION

Be sure to prevent an external force from being exerted on the float switch.
(This may cause breakage.)

5. Attach the inspection lid.
6. Perform the following operation using the remote controller, and check drainage.
   - Select the inspection/test operation button " TEST " using the remote controller. The unit will engage the test operation. Press the operation selector button " ", and select FAN OPERATION " ".
   - Press the ON/OFF button " ". (The indoor fan and drain pump will operate.)

CAUTION

The fan will turn also at the same time. Take due care.

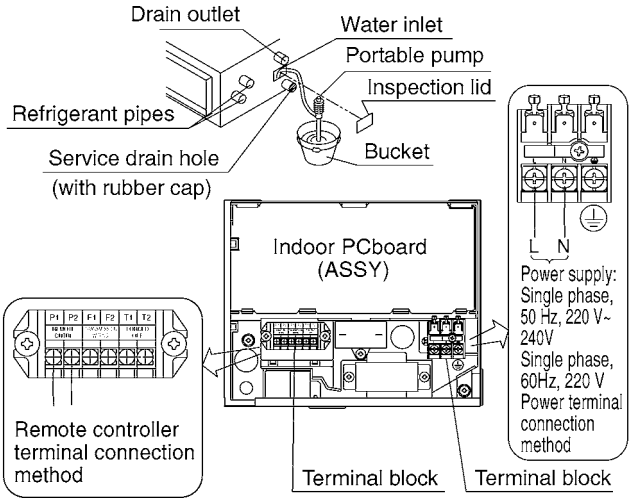

7. Make sure to use the remote controller in finishing the operation.

C : 3PN06583-3B
C : 3PN06583-4D
C : 3PN06588-2C
C : 3PN06583-2B

11. Accessories

Standard Accessories

FXDQ20~63P · N(A)

Name	Metal clamp (1)	Drain hose (2)	Insulation for fitting	Sealing pad	Screws for duct flanges (7)	Washer for hanging bracket (8)	Clamp
Quantity	1 pc.	1 pc.	1 each	1 each	1 set	8 pcs.	1 set
Shape			 for liquid pipe (3)  for gas pipe (4)	 Large (5)  mid. (6)	 24 pcs.		 Large (9) 8 pcs.  small (10) 4 pcs.

Name	Washer fixing plate (11)	Sealing material (12)	Air filter (13)	(Other)
Quantity	4 pcs.	2 pcs.	1 pc.	• Operation manual • Declaration of conformity • Product quality certificate (Only for with Drain Pump type) • Installation manual
Shape	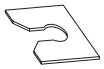		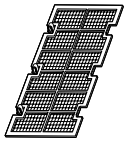	

C : 3PN06583-3B
C : 3PN06583-4D
C : 3PN06588-2C
C : 3PN06583-2B

Optional Accessories (For Unit)

No.	Item / Type	FXDQ20PVE (T) FXDQ25PVE (T) FXDQ32PVE (T)	FXDQ20N(A)VE (T) FXDQ25N(A)VE (T) FXDQ32N(A)VE (T)	FXDQ40N(A)VE (T) FXDQ50N(A)VE (T) FXDQ63N(A)VE (T)
1	Insulation Kit for high humidity	KDT25N32	KDT25N50	KDT25N63

C : 4D051851

Optional Accessories (For Controls) Refer to P.375

KDT25N32 · 50 · 63-Insulation Kit for High Humidity

Dimensions **Unit: mm**

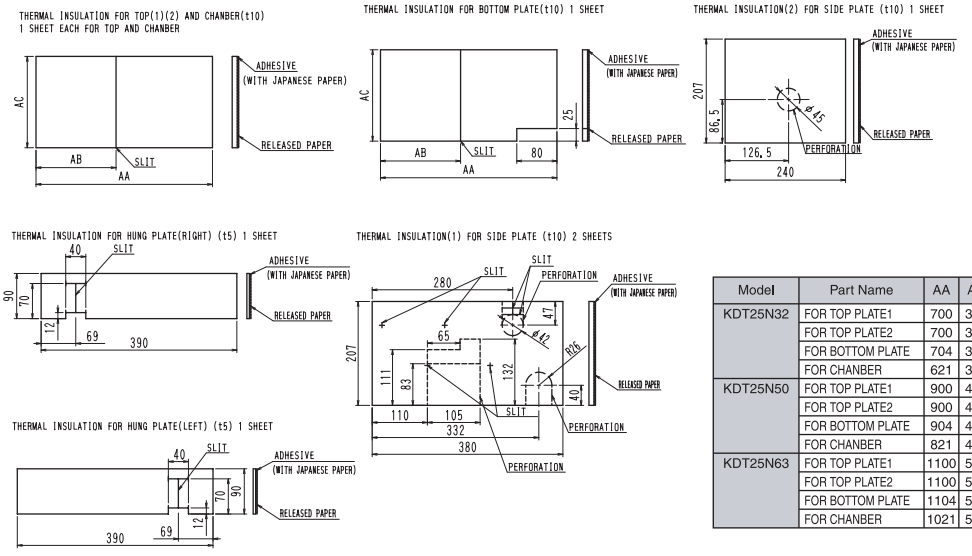

Model	Part Name	AA	AB	AA
KDT25N32	FOR TOP PLATE1	700	350	380
	FOR TOP PLATE2	700	350	240
	FOR BOTTOM PLATE	704	352	420
	FOR CHANBER	621	310	200
KDT25N50	FOR TOP PLATE1	900	450	380
	FOR TOP PLATE2	900	450	240
	FOR BOTTOM PLATE	904	452	420
	FOR CHANBER	821	410	200
KDT25N63	FOR TOP PLATE1	1100	550	380
	FOR TOP PLATE2	1100	550	240
	FOR BOTTOM PLATE	1104	552	420
	FOR CHANBER	1021	510	200

Item \ Model	KDT25N32	KDT25N50	KDT25N63
Material	Foam polyethylene (with Japanese paper)		
Accessories	Installation manual		

FXSQ-M
Ceiling Mounted Built-In Type

1. Features 152
2. Specifications 155
3. Dimensions 158
4. Piping Diagrams 166
5. Wiring Diagrams 167
6. Electric Characteristics 168
7. Capacity Tables 169
   7.1 Cooling Capacity 169
   7.2 Heating Capacity 170
8. Fan Performances 171
   8.1 50Hz 171
   8.2 60Hz 172
9. Air Velocity and Temperature Distributions (Reference Data) 173
10. Sound Levels 175
11. Installation 177
12. Accessories 180

6

1. Features

A highly flexible air-conditioning system that is adaptable to a wide range of needs, and is designed to facilitate maintenance while providing a high-quality environment.

- Offers freedom of development for the body, outlets and inlets, and wide variety of optional functions, and gives you the freedom to choose the best set-up according to conditions and needs such as interior and layout design, maintenance, etc.

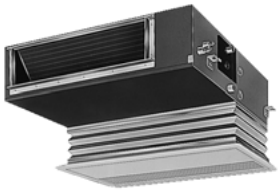

Installation Examples (∗Optional Parts)

●Standard

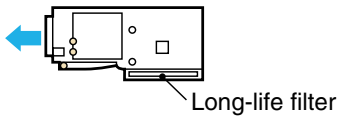

●With duct (case 1)

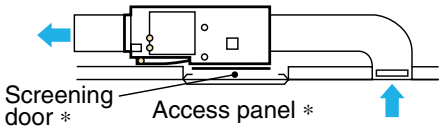

●With duct (case 2)

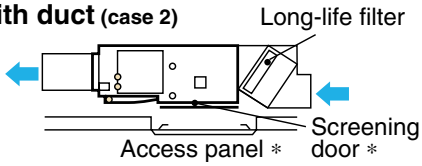

●Cassette style (standard filter)

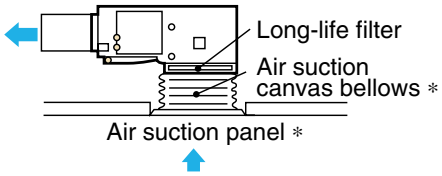

●Cassette style (high efficiency filter)

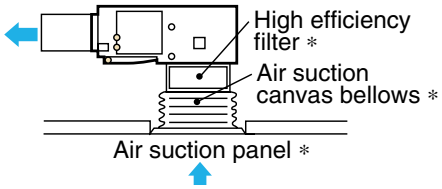

●Ceiling return

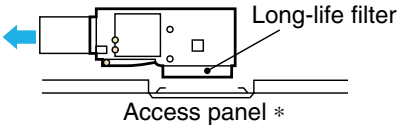

- In addition to regular ducts, layout is unrestricted and design is easy. You can also use flexible ducts that do not require the duct work of regular ducts.
- Offers a selection of nine models ranging from 20 class (equivalent to 0.8 HP) to Maximum 125 class (equivalent to 5 HP).
- All models feature thin design (350 mm height) making them applicable to ceiling pockets that tend to be shallow.
- Lets you set external static pressure in three stages ranging from max. 10 to min. 2 mm H_2O (2 stages, min. 4 mm H_2O for 80 class) according to conditions such as duct height or whether a high-efficiency filter is used, etc.
- Equipped with a programmed drying mechanism that dehumidifies while inhibiting changes in room temperature
- Includes as standard equipment a long-life filter that is maintenance-free for approximately one year. (Treated to mold resistant.)
- Includes as standard equipment drain pump kit that makes possible draining in the upward direction up to 250 mm from the drain pipe opening.

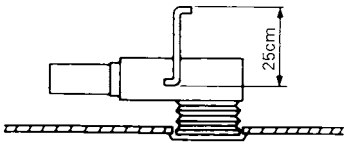

(V0052)

- Quiet-type air-conditioner doesn't destroy the quiet mood of your office.

Capacity	20 type	25 type	32 type	40 type	50 type	63 type	80 type	100 type	125 type
Operating sound (dBA)	37/32	37/32	38/32	38/32	41/36	42/35	43/37	43/37	46/41

- Two types of high-efficiency filters, 65% and 90% (colorimetric method) are available. (Cannot be used if using rear suction type.)
- Suction half panel is thin and unimposing. Ceiling materials adhere to its surface and it provides an excellent finishing touch for the ceiling.
- A wide variety of optional accessories are available such as an auxiliary electric heater (except cooling only).
- If using duct air mounting, please consult with the local fire department for auxiliary heater installation.

Example of Installation (Built-In)

■ Direct installation of half panel

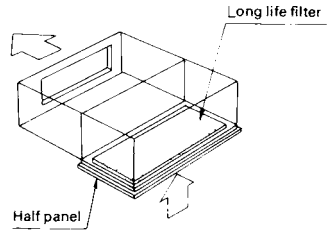

(V0082)

Model		FXSQ20M FXSQ25M FXSQ32M	FXSQ40M FXSQ50M	FXSQ63M	FXSQ80M FXSQ100M FXSQ125M
Necessary Options	Remote Controller	BRC1C62			
	Half Panel	BYBS32DJW1	BYBS45DJW1	BYBS71DJW1	BYBS125DJW1

■ Installation of Half panel and suction canvas

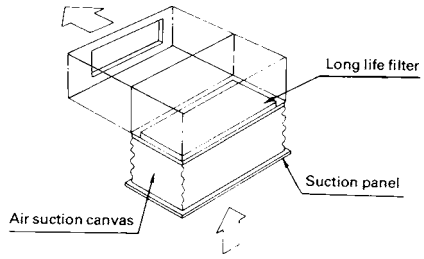

(V0083)

Model		FXSQ20M FXSQ25M FXSQ32M	FXSQ40M FXSQ50M	FXSQ63M	FXSQ80M FXSQ100M FXSQ125M
Necessary Options	Remote Controller	BRC1C62			
	Half Panel	BYBS32DJW1	BYBS45DJW1	BYBS71DJW1	BYBS125DJW1
	Air Suction Canvas	KSA-25K36	KSA-25K56	KSA-25K80	KSA-25L160

■ Installation like ceiling mounted cassette type with High efficiency filter

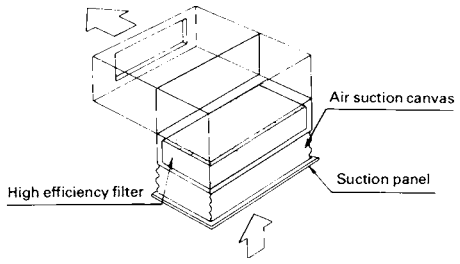

(V0084)

Model			FXSQ20M FXSQ25M FXSQ32M	FXSQ40M FXSQ50M	FXSQ63M	FXSQ80M FXSQ100M FXSQ125M
Necessary Options	Remote Controller		BRC1C62			
	Half Panel		BYBS32DJW1	BYBS45DJW1	BYBS71DJW1	BYBS125DJW1
	High Efficiency Filter	NBS65%	KAFJ252L36	KAFJ252L56	KAFJ252L80	KAFJ252L160
		NBS90%	KAFJ253L36	KAFJ253L56	KAFJ253L80	KAFJ253L160
	Air Suction Canvas		KSA-25K36	KSA-25K56	KSA-25K80	KSA-25L160
	Bottom Suction Filter Chamber		KAJ25L36D	KAJ25L56D	KAJ25L80D	KAJ25L160D

■ Installation with duct (A)

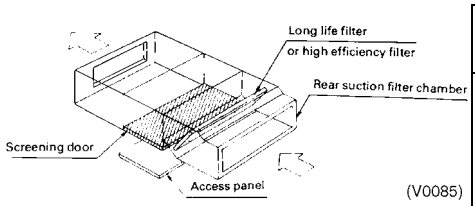

(V0085)

The access panel should be fitted beneath the main body of the unit.

Model			FXSQ20M FXSQ25M FXSQ32M	FXSQ40M FXSQ50M	FXSQ63M	FXSQ80M FXSQ100M FXSQ125M
Necessary Options	Remote Controller		BRC1C62			
	Access Panel		KTBJ25K36W	KTBJ25K56W	KTBJ25K80W	KTBJ25K160W
	Rear Suction Filter Chamber		KAJ25L36B	KAJ25L56B	KAJ25L80B	KAJ25L160B
	Screening Door		KBBJ25K36	KBBJ25K56	KBBJ25K80	KBBJ25K160
	High Efficiency Filter (If Necessary)	NBS65%	KAFJ252L36	KAFJ252L56	KAFJ252L80	KAFJ252L160
		NBS90%	KAFJ253L36	KAFJ253L56	KAFJ253L80	KAFJ253L160

■ Ceiling return

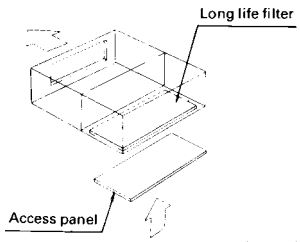

(V0086)

The access panel should be fitted beneath the main body of the unit.

Model		FXSQ20M FXSQ25M FXSQ32M	FXSQ40M FXSQ50M	FXSQ63M	FXSQ80M FXSQ100M FXSQ125M
Necessary Options	Remote Controller	BRC1C62			
	Access Panel	KTBJ25K36W	KTBJ25K56W	KTBJ25K80W	KTBJ25K160W

■ Installation with duct (B)

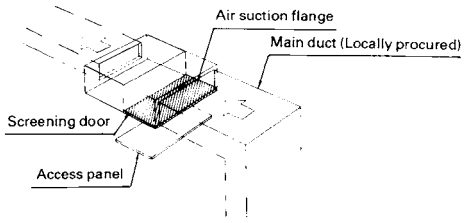

(V0087)

The access panel should be fitted beneath the main body of the unit.

Model		FXSQ20M FXSQ25M FXSQ32M	FXSQ40M FXSQ50M	FXSQ63M	FXSQ80M FXSQ100M FXSQ125M
Necessary Options	Remote Controller	BRC1C62			
	Access Panel	KTBJ25K36W	KTBJ25K56W	KTBJ25K80W	KTBJ25K160W
	Screening Door	KBBJ25K36	KBBJ25K56	KBBJ25K80	KBBJ25K160
	Air Suction Flange	KDJ2507K36	KDJ2507K56	KDJ2507K80	KDJ2507K160

2. Specifications

Ceiling Mounted Built-In Type

Model				FXSQ20MVE	FXSQ25MVE	FXSQ32MVE
∗1 Cooling Capacity (19.5°CWB)			kcal/h	2,000	2,500	3,200
			Btu/h	7,800	9,900	12,600
			kW	2.3	2.9	3.7
∗2 Cooling Capacity (19.0°CWB)			kW	2.2	2.8	3.6
∗3 Heating Capacity			kcal/h	2,200	2,800	3,400
			Btu/h	8,500	10,900	13,600
			kW	2.5	3.2	4.0
Casing				Galvanized Steel Plate	Galvanized Steel Plate	Galvanized Steel Plate
Dimensions: (H×W×D)			mm	300×550×800	300×550×800	300×550×800
Coil (Cross Fin Coil)	Rows×Stages×Fin Pitch		mm	3×14×1.75	3×14×1.75	3×14×1.75
	Face Area		m^2	0.088	0.088	0.088
Fan	Model			D18H3A	D18H3A	D18H3A
	Type			Sirocco Fan	Sirocco Fan	Sirocco Fan
	Motor Output × Number of Units		W	50×1	50×1	50×1
	Air Flow Rate (H/L)	50 Hz	m^3/min	9/6.5	9/6.5	9.5/7
			cfm	318/230	318/230	335/247
		60 Hz	m^3/min	9/6.5	9/6.5	9.5/6.5
			cfm	318/230	318/230	335/230
	∗4 External Static Pressure	50 Hz	Pa	88-39-20	88-39-20	64-39-15
		60 Hz	Pa	73-24-10	73-24-10	86-42-10
	Drive			Direct Drive	Direct Drive	Direct Drive
Temperature Control				Microprocessor Thermostat for Cooling and Heating	Microprocessor Thermostat for Cooling and Heating	Microprocessor Thermostat for Cooling and Heating
Sound Absorbing Thermal Insulation Material				Glass Fiber	Glass Fiber	Glass Fiber
Air Filter				Resin Net (with Mold Resistant)	Resin Net (with Mold Resistant)	Resin Net (with Mold Resistant)
Piping Connections	Liquid Pipes		mm	ϕ6.4 (Flare Connection)	ϕ6.4 (Flare Connection)	ϕ6.4 (Flare Connection)
	Gas Pipes		mm	ϕ12.7 (Flare Connection)	ϕ12.7 (Flare Connection)	ϕ12.7 (Flare Connection)
	Drain Pipe		mm	VP25 (External Dia. 32 Internal Dia. 25)	VP25 (External Dia. 32 Internal Dia. 25)	VP25 (External Dia. 32 Internal Dia. 25)
Machine Weight (Mass)			kg	30	30	30
∗6 Sound Level (H/L) (220V)			dBA	37/32	37/32	38/32
Safety Devices				Fuse. Thermal Protector for Fan Motor.	Fuse. Thermal Protector for Fan Motor.	Fuse. Thermal Protector for Fan Motor.
Refrigerant Control				Electronic Expansion Valve	Electronic Expansion Valve	Electronic Expansion Valve
Connectable Outdoor Unit				R-410A P Series	R-410A P Series	R-410A P Series
Decoration Panel (Option)	Model			BYBS32DJW1	BYBS32DJW1	BYBS32DJW1
	Panel Color			White (10Y9/0.5)	White (10Y9/0.5)	White (10Y9/0.5)
	Dimensions: (H×W×D)		mm	55×650×500	55×650×500	55×650×500
	Weight		kg	3	3	3
Standard Accessories				Operation Manual. Installation Manual. Paper Pattern for Installation. Drain Hose. Clamp Metal. Insulation for Fitting. Sealing Pads. Clamps. Screws. Washers.	Operation Manual. Installation Manual. Paper Pattern for Installation. Drain Hose. Clamp Metal. Insulation for Fitting. Sealing Pads. Clamps. Screws. Washers.	Operation Manual. Installation Manual. Paper Pattern for Installation. Drain Hose. Clamp Metal. Insulation for Fitting. Sealing Pads. Clamps. Screws. Washers.
Drawing No.				C : 3D039431		

Note:

∗1 Indoor temp. : 27°CDB, 19.5°CWB / outdoor temp. : 35°CDB / Equivalent piping length : 7.5 m, level difference : 0 m.
∗2 Indoor temp. : 27°CDB, 19.0°CWB / outdoor temp. : 35°CDB / Equivalent piping length : 7.5 m, level difference : 0 m.
∗3 Indoor temp. : 20°CDB / outdoor temp. : 7°CDB, 6°CWB / Equivalent piping length : 7.5 m, level difference : 0 m.
∗4 External static pressure is changeable to change over the connectors inside electrical box, this pressure means "High static pressure-Standard -Low static pressure".
5 Capacities are net, including a deduction for cooling (an additional for heating) for indoor fan motor heat.
∗6 Anechoic chamber conversion value, measured at a point 1.5 m downward from the unit center. These values are normally somewhat higher during actual operation as a result of ambient conditions.
7 Refer to page 168 for Fan Motor Input.

Conversion Formulae
kcal/h=kW×860
Btu/h=kW×3412
cfm=m^3/min×35.3

Ceiling Mounted Built-In Type

Model				FXSQ40MVE	FXSQ50MVE	FXSQ63MVE
∗1 Cooling Capacity (19.5°CWB)			kcal/h	4,000	5,000	6,300
			Btu/h	16,000	19,800	24,900
			kW	4.7	5.8	7.3
∗2 Cooling Capacity (19.0°CWB)			kW	4.5	5.6	7.1
∗3 Heating Capacity			kcal/h	4,300	5,400	6,900
			Btu/h	17,100	21,500	27,300
			kW	5.0	6.3	8.0
Casing				Galvanized Steel Plate	Galvanized Steel Plate	Galvanized Steel Plate
Dimensions: (H×W×D)			mm	300×700×800	300×700×800	300×1,000×800
Coil (Cross Fin Coil)	Rows×Stages×Fin Pitch		mm	3×14×1.75	3×14×1.75	3×14×1.75
	Face Area		m²	0.132	0.132	0.221
Fan	Model			D18H2A	D18H2A	2D18H2A
	Type			Sirocco Fan	Sirocco Fan	Sirocco Fan
	Motor Output × Number of Units		W	65×1	85×1	125×1
	Air Flow Rate (H/L)	50 Hz	m³/min	11.5/9	15/11	21/15.5
			cfm	406/318	530/388	741/547
		60 Hz	m³/min	11.5/9	15/11	21/14
			cfm	406/318	530/388	741/494
	∗4 External Static Pressure	50 Hz	Pa	88-49-20	88-59-29	88-49-20
		60 Hz	Pa	88-29-10	88-41-10	122-66-10
	Drive			Direct Drive	Direct Drive	Direct Drive
Temperature Control				Microprocessor Thermostat for Cooling and Heating	Microprocessor Thermostat for Cooling and Heating	Microprocessor Thermostat for Cooling and Heating
Sound Absorbing Thermal Insulation Material				Glass Fiber	Glass Fiber	Glass Fiber
Air Filter				Resin Net (with Mold Resistant)	Resin Net (with Mold Resistant)	Resin Net (with Mold Resistant)
Piping Connections	Liquid Pipes		mm	ϕ6.4 (Flare Connection)	ϕ6.4 (Flare Connection)	ϕ9.5 (Flare Connection)
	Gas Pipes		mm	ϕ12.7 (Flare Connection)	ϕ12.7 (Flare Connection)	ϕ15.9 (Flare Connection)
	Drain Pipe		mm	VP25 (External Dia. 32 Internal Dia. 25)	VP25 (External Dia. 32 Internal Dia. 25)	VP25 (External Dia. 32 Internal Dia. 25)
Machine Weight (Mass)			kg	30	31	41
∗6 Sound Level (H/L) (220V)			dBA	38/32	41/36	42/35
Safety Devices				Fuse. Thermal Protector for Fan Motor.	Fuse. Thermal Protector for Fan Motor.	Fuse. Thermal Protector for Fan Motor.
Refrigerant Control				Electronic Expansion Valve	Electronic Expansion Valve	Electronic Expansion Valve
Connectable Outdoor Unit				R-410A P Series	R-410A P Series	R-410A P Series
Decoration Panel (Option)	Model			BYBS45DJW1	BYBS45DJW1	BYBS71DJW1
	Panel Color			White (10Y9/0.5)	White (10Y9/0.5)	White (10Y9/0.5)
	Dimensions: (H×W×D)		mm	55×800×500	55×800×500	55×1,100×500
	Weight		kg	3.5	3.5	4.5
Standard Accessories				Operation Manual. Installation Manual. Paper Pattern for Installation. Drain Hose. Clamp Metal. Insulation for Fitting. Sealing Pads. Clamps. Screws. Washers.	Operation Manual. Installation Manual. Paper Pattern for Installation. Drain Hose. Clamp Metal. Insulation for Fitting. Sealing Pads. Clamps. Screws. Washers.	Operation Manual. Installation Manual. Paper Pattern for Installation. Drain Hose. Clamp Metal. Insulation for Fitting. Sealing Pads. Clamps. Screws. Washers.
Drawing No.				C : 3D039431		

Note:

∗1 Indoor temp. : 27°CDB, 19.5°CWB / outdoor temp. : 35°CDB / Equivalent piping length : 7.5 m, level difference : 0 m.
∗2 Indoor temp. : 27°CDB, 19.0°CWB / outdoor temp. : 35°CDB / Equivalent piping length : 7.5 m, level difference : 0 m.
∗3 Indoor temp. : 20°CDB / outdoor temp. : 7°CDB, 6°CWB / Equivalent piping length : 7.5 m, level difference : 0 m.
∗4 External static pressure is changeable to change over the connectors inside electrical box, this pressure means "High static pressure-Standard -Low static pressure".
5 Capacities are net, including a deduction for cooling (an additional for heating) for indoor fan motor heat.
∗6 Anechoic chamber conversion value, measured at a point 1.5 m downward from the unit center. These values are normally somewhat higher during actual operation as a result of ambient conditions.
7 Refer to page 168 for Fan Motor Input.

Conversion Formulae
kcal/h=kW×860 Btu/h=kW×3412 cfm=m³/min×35.3

Ceiling Mounted Built-In Type

Model				FXSQ80MVE	FXSQ100MVE	FXSQ125MVE
∗1 Cooling Capacity (19.5°CWB)			kcal/h	8,000	10,000	12,500
			Btu/h	31,700	39,600	49,500
			kW	9.3	11.6	14.5
∗2 Cooling Capacity (19.0°CWB)			kW	9.0	11.2	14.0
∗3 Heating Capacity			kcal/h	8,600	10,800	13,800
			Btu/h	34,100	42,700	54,600
			kW	10.0	12.5	16.0
Casing				Galvanized Steel Plate	Galvanized Steel Plate	Galvanized Steel Plate
Dimensions: (H×W×D)			mm	300×1,400×800	300×1,400×800	300×1,400×800
Coil (Cross Fin Coil)	Rows×Stages×Fin Pitch		mm	3×14×1.75	3×14×1.75	3×14×1.75
	Face Area		m^2	0.338	0.338	0.338
Fan	Model			3D18H2A	3D18H2A	3D18H2A
	Type			Sirocco Fan	Sirocco Fan	Sirocco Fan
	Motor Output × Number of Units		W	225×1	225×1	225×1
	Air Flow Rate (H/L)	50 Hz	m^3/min	27/21.5	28/22	38/28
			cfm	953/759	988/777	1,341/988
		60 Hz	m^3/min	27/20.5	28/21	38/27
			cfm	953/724	988/741	1,341/953
	∗4 External Static Pressure	50 Hz	Pa	113-82	107-75	78-39
		60 Hz	Pa	147-92	136-83	78-20
	Drive			Direct Drive	Direct Drive	Direct Drive
Temperature Control				Microprocessor Thermostat for Cooling and Heating	Microprocessor Thermostat for Cooling and Heating	Microprocessor Thermostat for Cooling and Heating
Sound Absorbing Thermal Insulation Material				Glass Fiber	Glass Fiber	Glass Fiber
Air Filter				Resin Net (with Mold Resistant)	Resin Net (with Mold Resistant)	Resin Net (with Mold Resistant)
Piping Connections	Liquid Pipes		mm	ϕ9.5 (Flare Connection)	ϕ9.5 (Flare Connection)	ϕ9.5 (Flare Connection)
	Gas Pipes		mm	ϕ15.9 (Flare Connection)	ϕ15.9 (Flare Connection)	ϕ15.9 (Flare Connection)
	Drain Pipe		mm	VP25 (External Dia. 32 Internal Dia. 25)	VP25 (External Dia. 32 Internal Dia. 25)	VP25 (External Dia. 32 Internal Dia. 25)
Machine Weight (Mass)			kg	51	51	52
∗6 Sound Level (H/L) (220V)			dBA	43/37	43/37	46/41
Safety Devices				Fuse. Thermal Protector for Fan Motor.	Fuse. Thermal Protector for Fan Motor.	Fuse. Thermal Protector for Fan Motor.
Refrigerant Control				Electronic Expansion Valve	Electronic Expansion Valve	Electronic Expansion Valve
Connectable Outdoor Unit				R-410A P Series	R-410A P Series	R-410A P Series
Decoration Panel (Option)	Model			BYBS125DJW1	BYBS125DJW1	BYBS125DJW1
	Panel Color			White (10Y9/0.5)	White (10Y9/0.5)	White (10Y9/0.5)
	Dimensions: (H×W×D)		mm	55×1,500×500	55×1,500×500	55×1,500×500
	Weight		kg	6.5	6.5	6.5
Standard Accessories				Operation Manual. Installation Manual. Paper Pattern for Installation. Drain Hose. Clamp Metal. Insulation for Fitting. Sealing Pads. Clamps. Screws. Washers.	Operation Manual. Installation Manual. Paper Pattern for Installation. Drain Hose. Clamp Metal. Insulation for Fitting. Sealing Pads. Clamps. Screws. Washers.	Operation Manual. Installation Manual. Paper Pattern for Installation. Drain Hose. Clamp Metal. Insulation for Fitting. Sealing Pads. Clamps. Screws. Washers.
Drawing No.				C : 3D039431		

Note:

∗1 Indoor temp. : 27°CDB, 19.5°CWB / outdoor temp. : 35°CDB / Equivalent piping length : 7.5 m, level difference : 0 m.
∗2 Indoor temp. : 27°CDB, 19.0°CWB / outdoor temp. : 35°CDB / Equivalent piping length : 7.5 m, level difference : 0 m.
∗3 Indoor temp. : 20°CDB / outdoor temp. : 7°CDB, 6°CWB / Equivalent piping length : 7.5 m, level difference : 0 m.
∗4 External static pressure is changeable to change over the connectors inside electrical box, this pressure means "High static pressure-Standard".
5 Capacities are net, including a deduction for cooling (an additional for heating) for indoor fan motor heat.
∗6 Anechoic chamber conversion value, measured at a point 1.5 m downward from the unit center. These values are normally somewhat higher during actual operation as a result of ambient conditions.
7 Refer to page 168 for Fan Motor Input.

Conversion Formulae
kcal/h=kW×860 Btu/h=kW×3412 cfm=m^3/min×35.3

3. Dimensions

FXSQ20M + BYBS32DJW1 (with Canvas Duct)
FXSQ25M + BYBS32DJW1 (with Canvas Duct)
FXSQ32M + BYBS32DJW1 (with Canvas Duct)

Unit (mm)

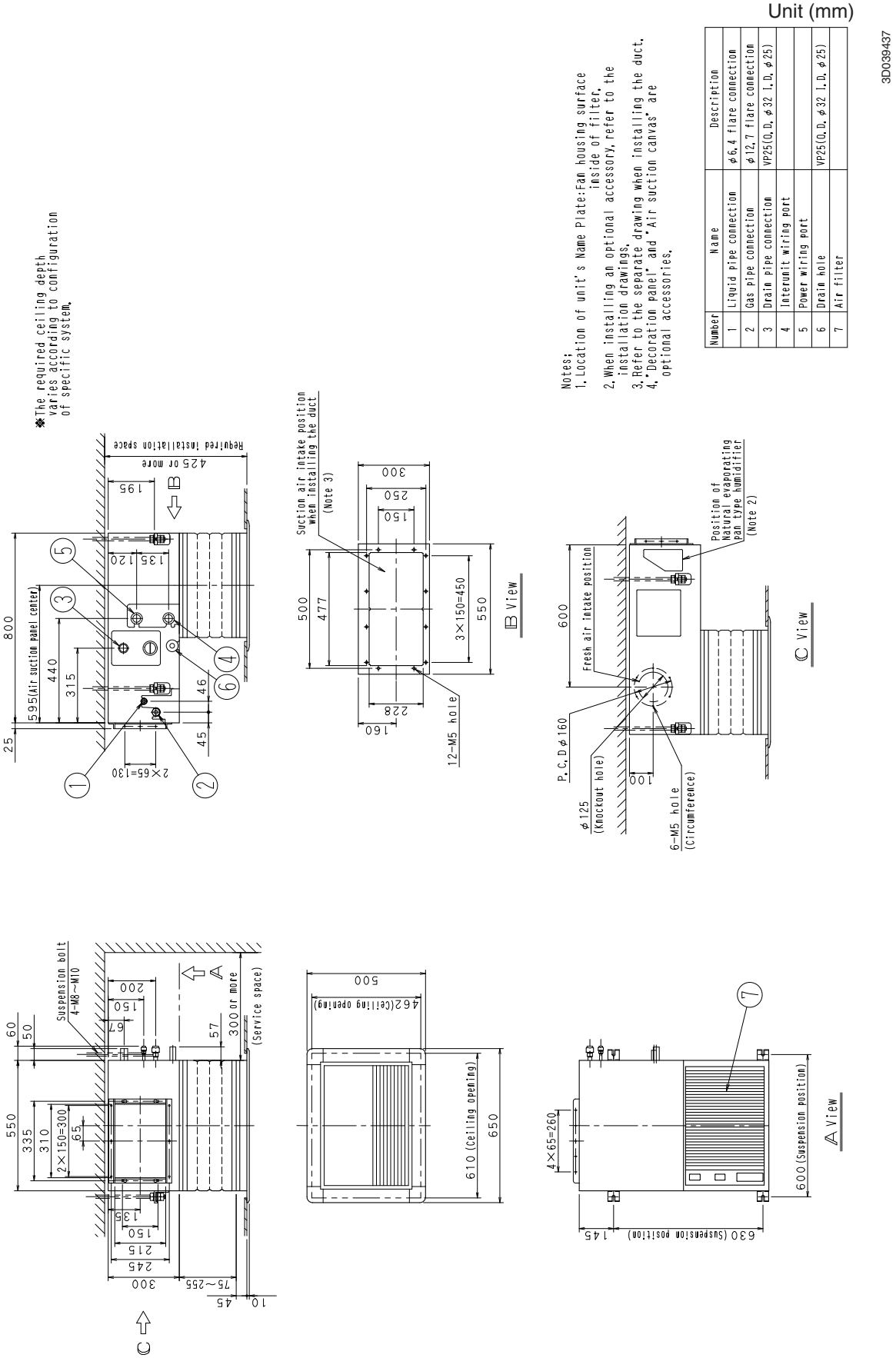

FXSQ40M + BYBS45DJW1 (with Canvas Duct)
FXSQ50M + BYBS45DJW1 (with Canvas Duct)

Unit (mm)

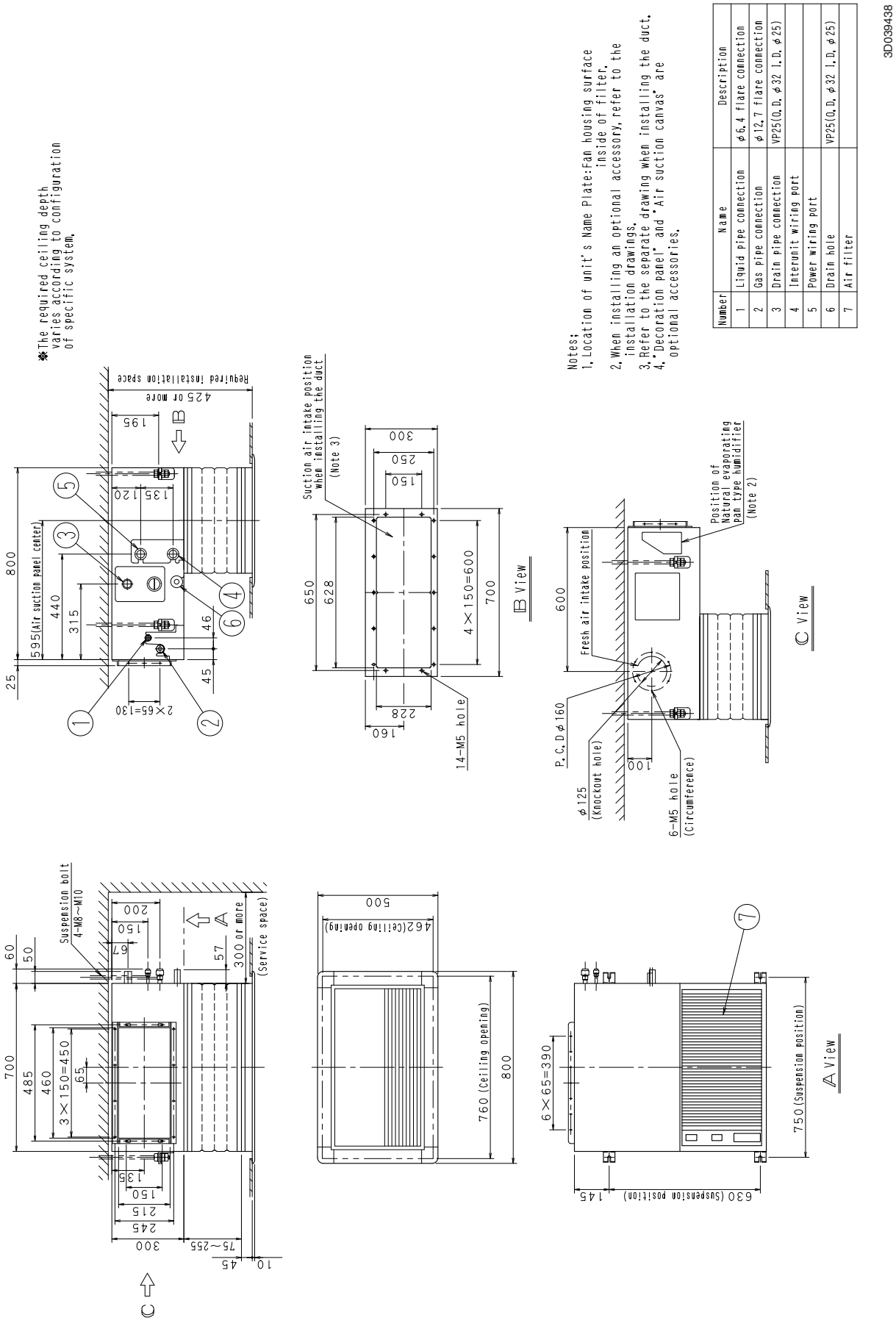

Notes:
1. Location of unit's Name Plate:Fan housing surface inside of filter.
2. When installing an optional accessory, refer to the installation drawings.
3. Refer to the separate drawing when installing the duct.
4. "Decoration panel" and "Air suction canvas" are optional accessories.

Number	Name	Description
1	Liquid pipe connection	φ6.4 flare connection
2	Gas pipe connection	φ12.7 flare connection
3	Drain pipe connection	VP25(O.D. φ32 I.D. φ25)
4	Interunit wiring port	
5	Power wiring port	
6	Drain hole	VP25(O.D. φ32 I.D. φ25)
7	Air filter	

3D039438

6

FXSQ63M + BYBS71DJW1 (with Canvas Duct)

Unit (mm)

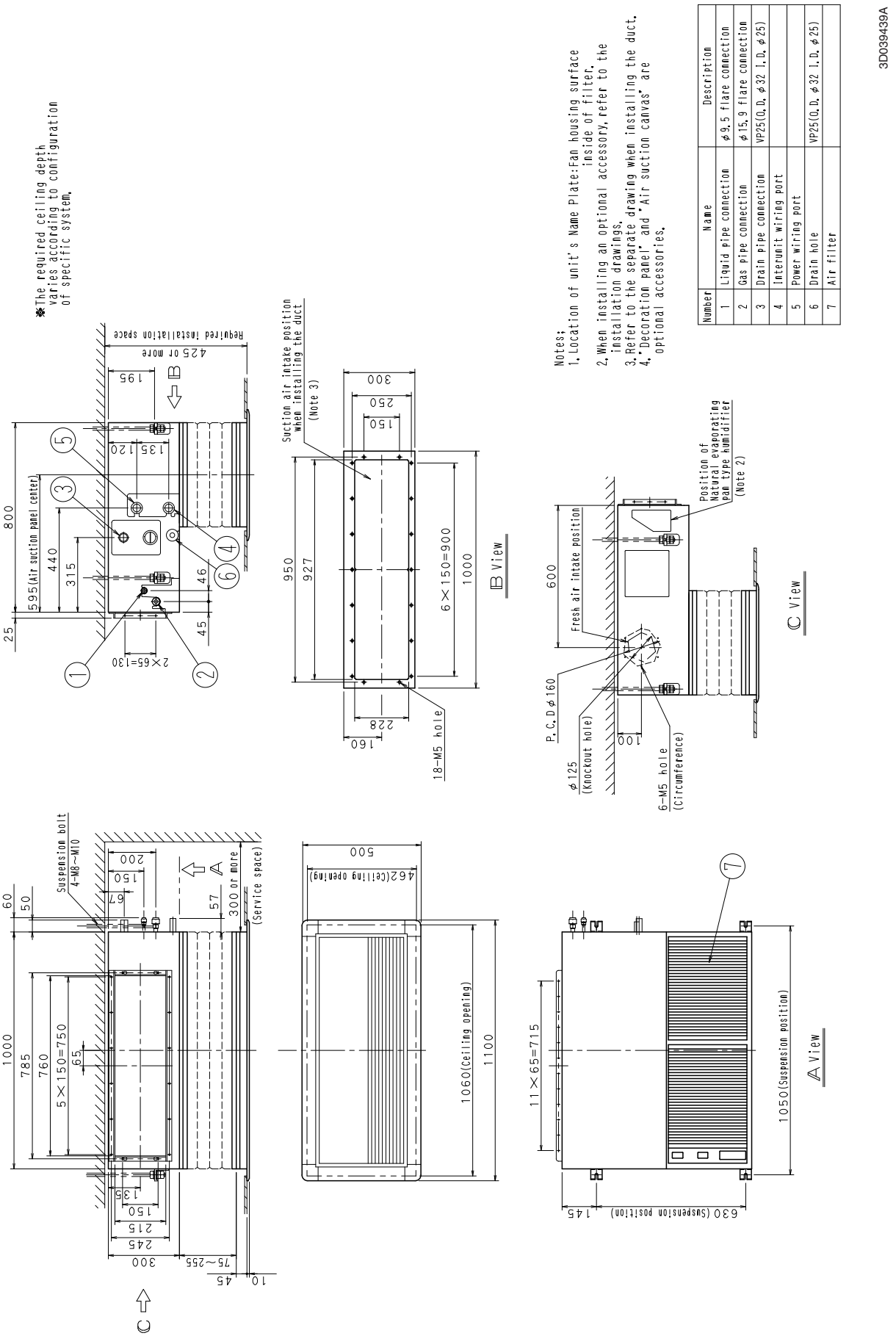

FXSQ80M + BYBS125DJW1 (with Canvas Duct)
FXSQ100M + BYBS125DJW1 (with Canvas Duct)
FXSQ125M + BYBS125DJW1 (with Canvas Duct)

Unit (mm)

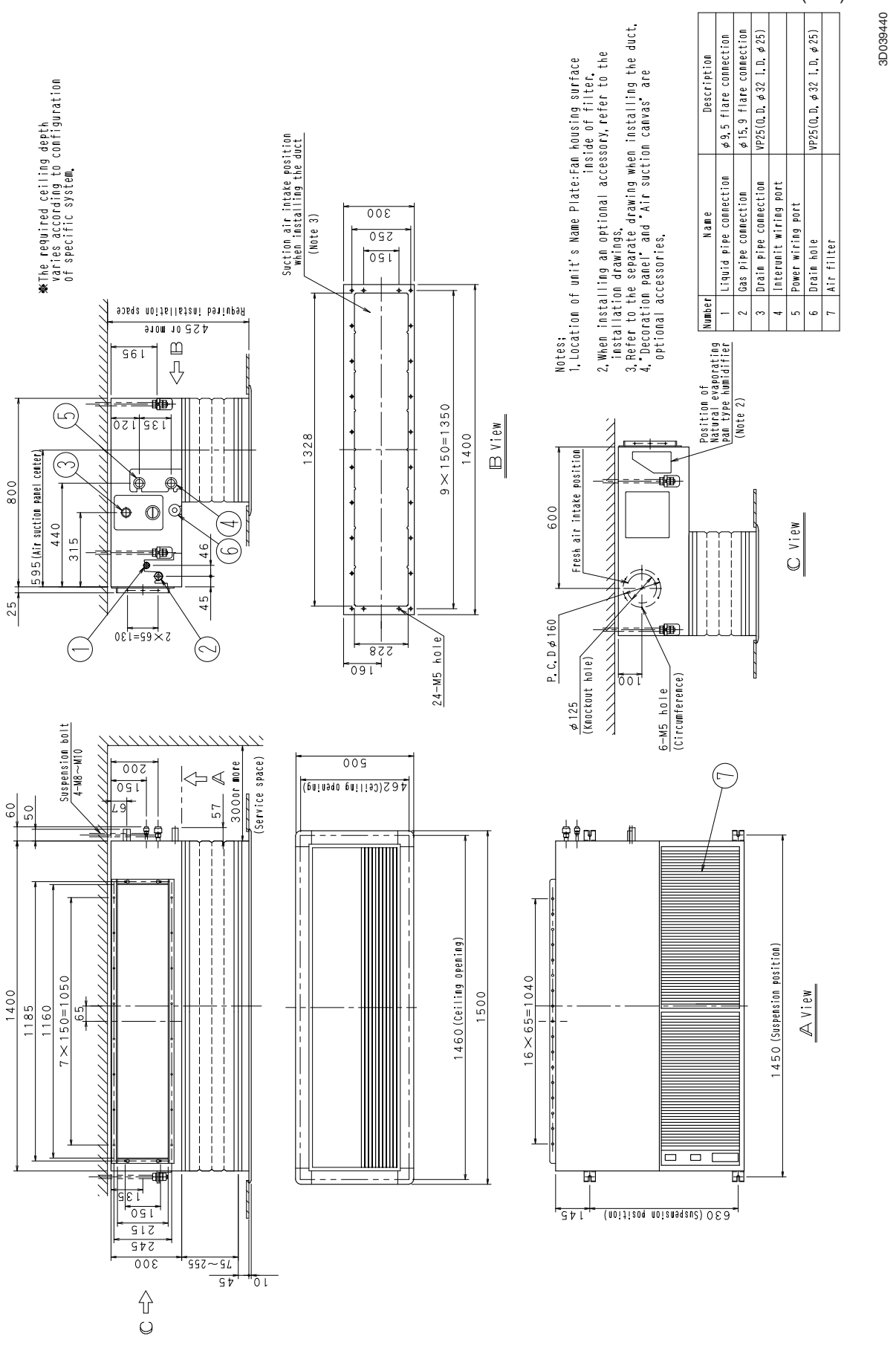

FXSQ20M + BYBS32DJW1 (without Canvas Duct)
FXSQ25M + BYBS32DJW1 (without Canvas Duct)
FXSQ32M + BYBS32DJW1 (without Canvas Duct)

Unit (mm)

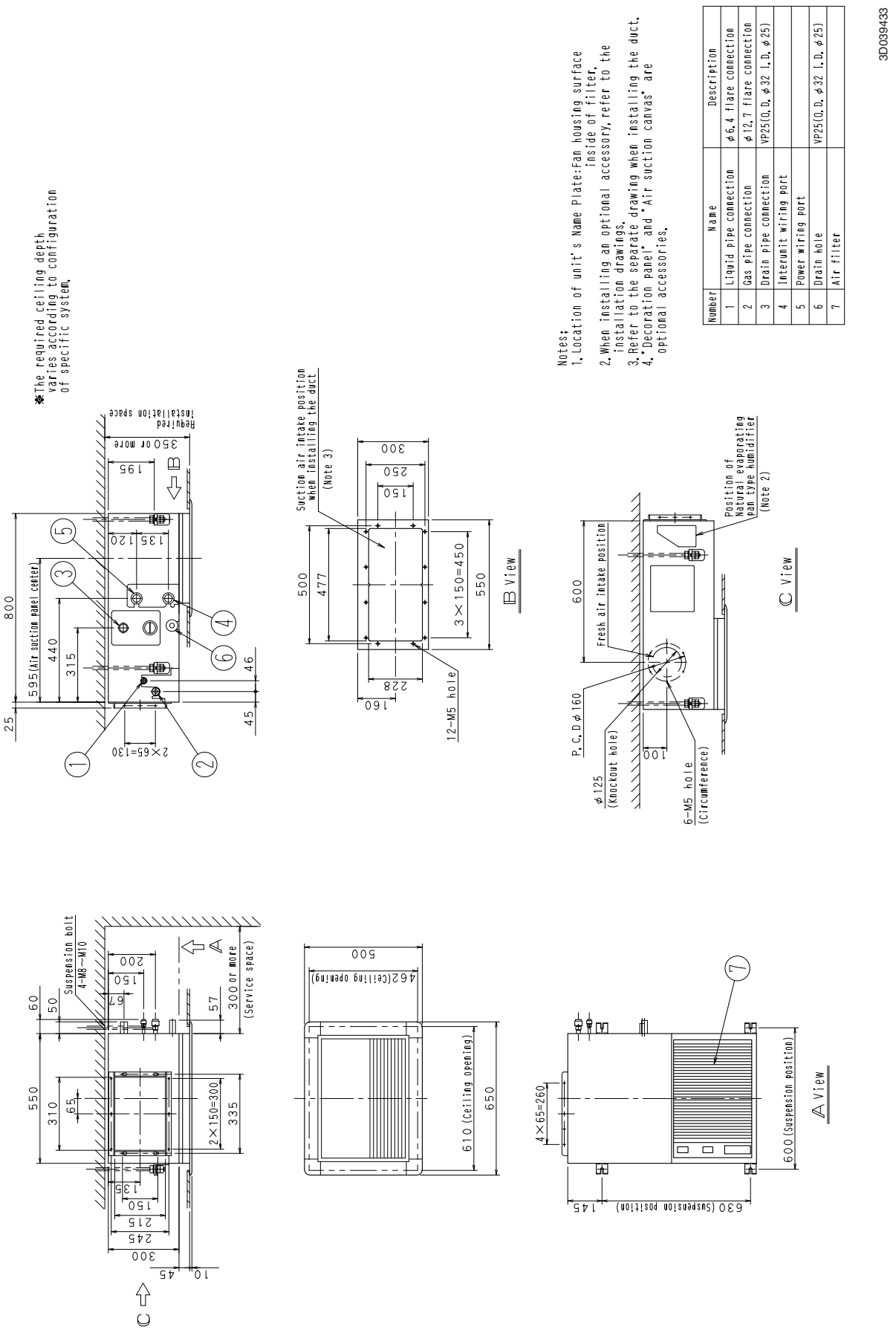

FXSQ40M + BYBS45DJW1 (without Canvas Duct)
FXSQ50M + BYBS45DJW1 (without Canvas Duct)

Unit (mm)

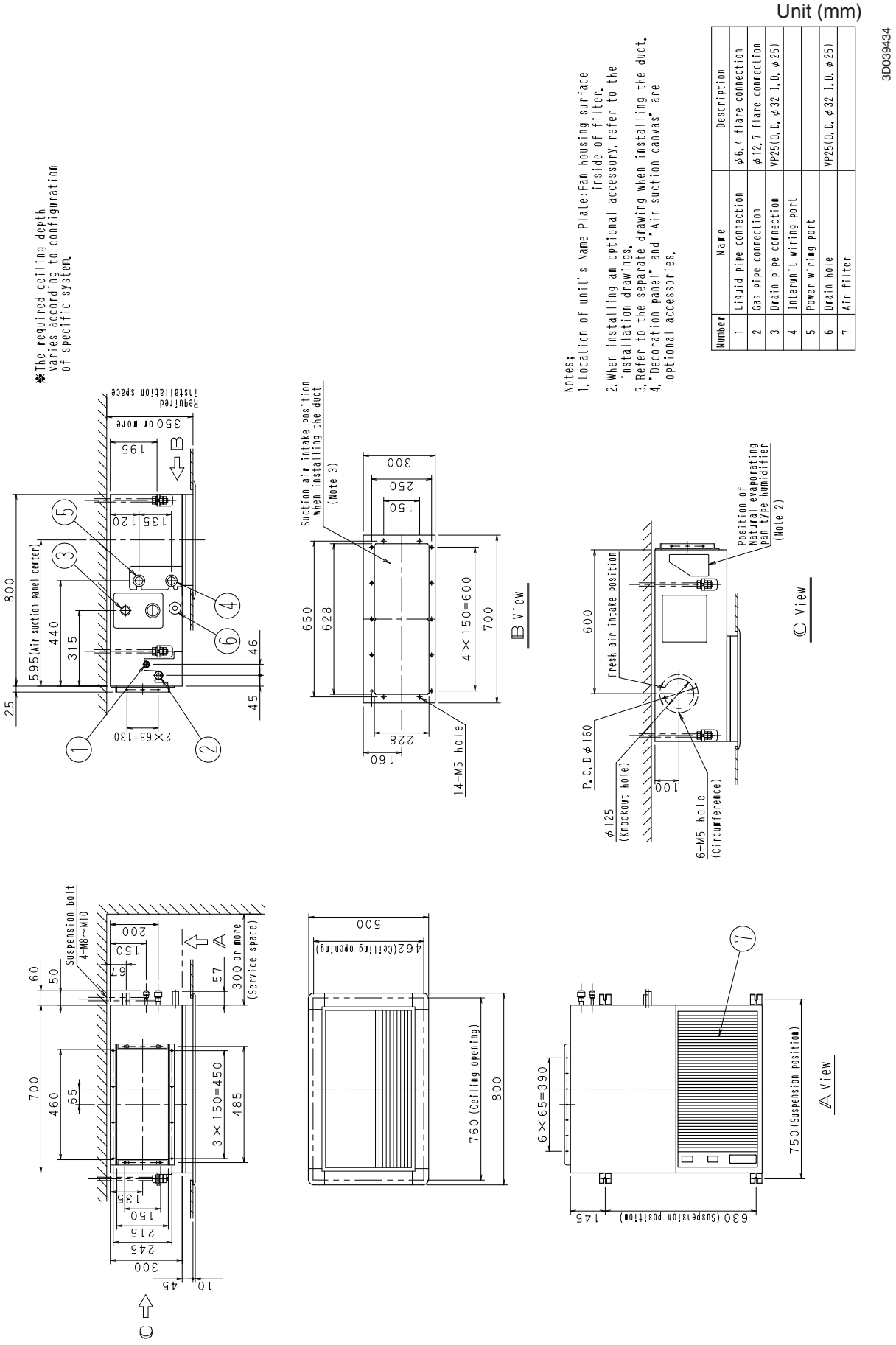

FXSQ63M + BYBS71DJW1 (without Canvas Duct)

Unit (mm)

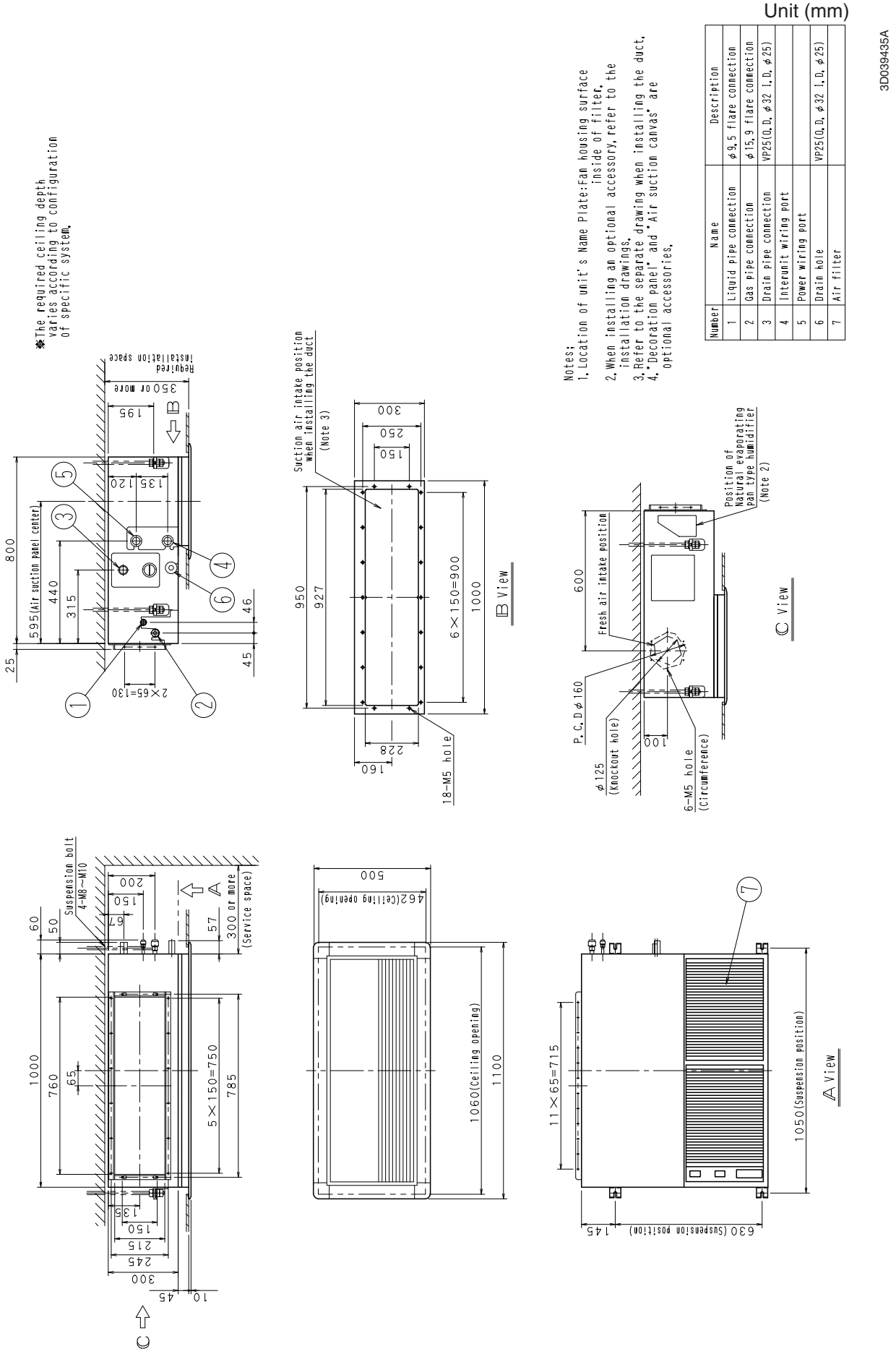

FXSQ80M + BYBS125DJW1 (without Canvas Duct)
FXSQ100M + BYBS125DJW1 (without Canvas Duct)
FXSQ125M + BYBS125DJW1 (without Canvas Duct)

Unit (mm)

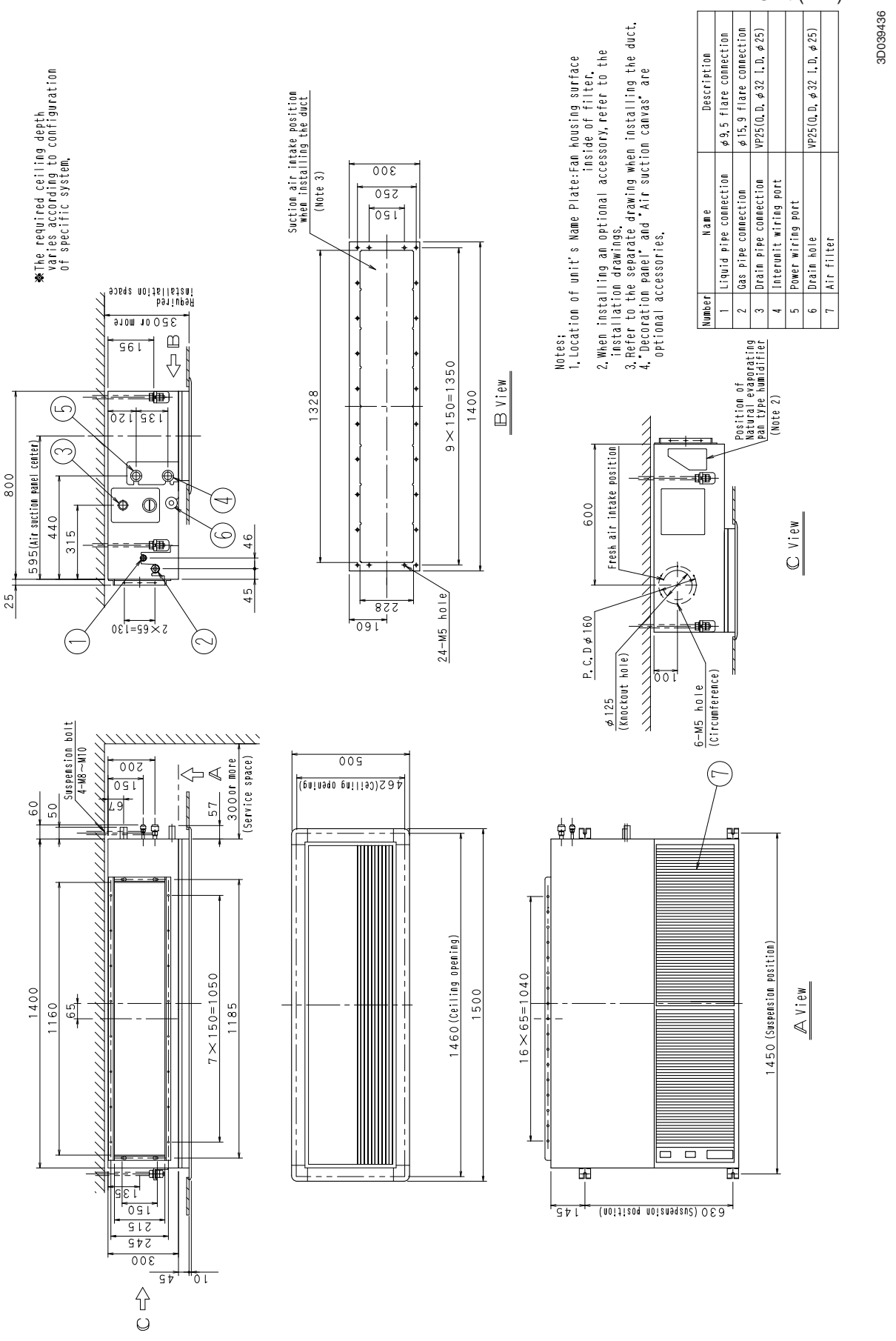

4. Piping Diagrams

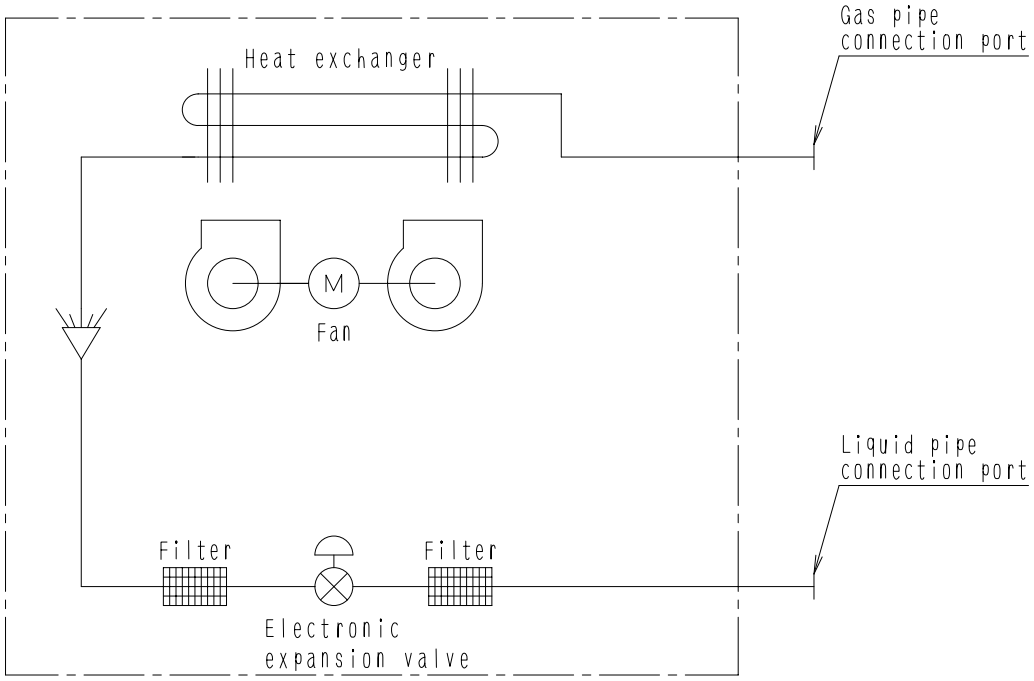

4D034245B

■ **Refrigerant pipe connection port diameters**

(mm)

Model	Gas	Liquid
FXSQ20 · 25 · 32 · 40 · 50M	ϕ12.7	ϕ6.4
FXSQ63 · 80 · 100 · 125M	ϕ15.9	ϕ9.5

5. Wiring Diagrams

FXSQ20 · 25 · 32 · 40 · 50 · 63 · 80 · 100 · 125MVE

3D039561B

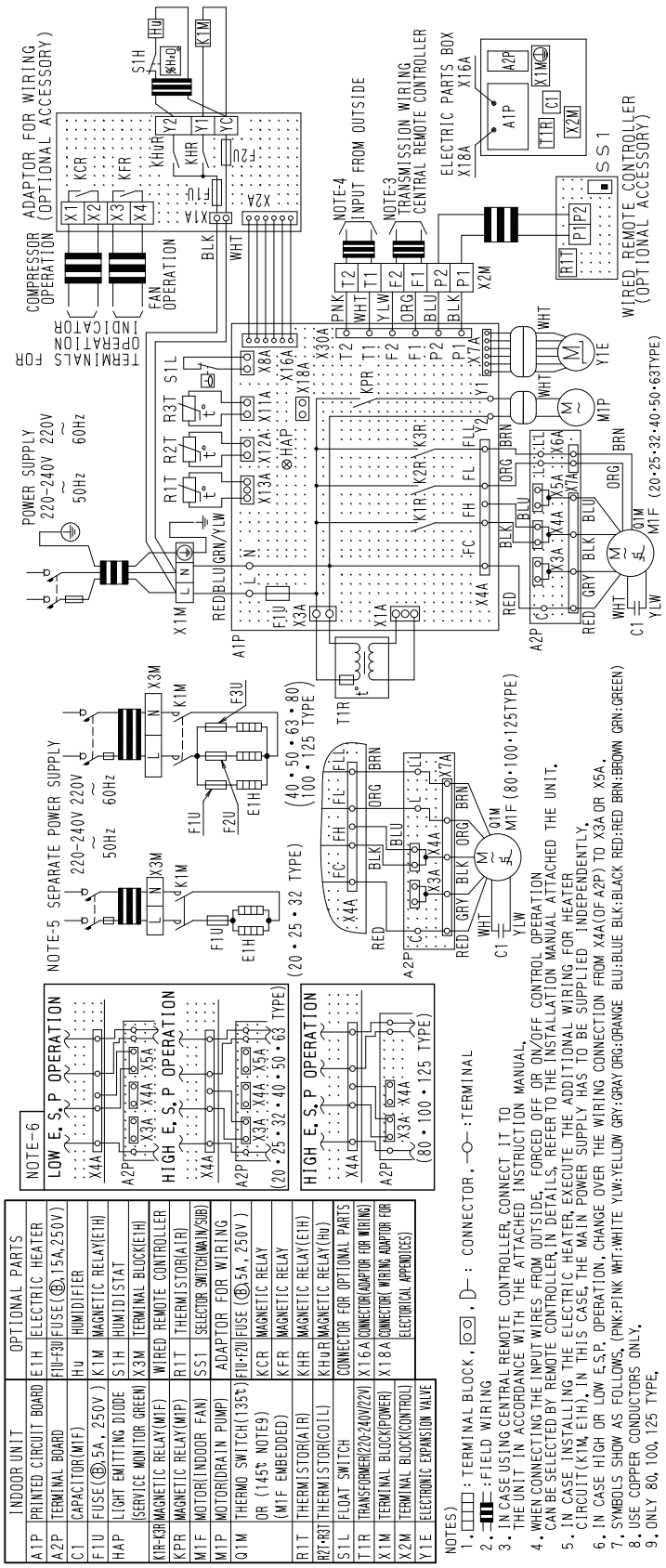

6. Electric Characteristics

Units					Power supply		IFM		Input(W)	
Model	Type	Hz	Volts	Voltage range	MCA	MFA	KW	FLA	Cooling	Heating
FXSQ20M	VE	50	220-240	MAX. 264 Min. 198	0.5	15	0.05	0.4	110	90
FXSQ25M					0.5	15	0.05	0.4	110	90
FXSQ32M					0.5	15	0.05	0.4	114	94
FXSQ40M					0.6	15	0.065	0.5	127	107
FXSQ50M					0.9	15	0.085	0.7	143	123
FXSQ63M					1.1	15	0.125	0.9	189	169
FXSQ80M					1.4	15	0.225	1.1	234	214
FXSQ100M					1.5	15	0.225	1.2	242	222
FXSQ125M					2.0	15	0.225	1.6	321	301
FXSQ20M	VE	60	220	MAX. 242 Min. 198	0.6	15	0.05	0.5	128	108
FXSQ25M					0.6	15	0.05	0.5	128	108
FXSQ32M					0.8	15	0.05	0.6	136	116
FXSQ40M					0.9	15	0.065	0.7	155	135
FXSQ50M					1.0	15	0.085	0.8	200	180
FXSQ63M					1.4	15	0.125	1.1	254	234
FXSQ80M					1.8	15	0.225	1.4	315	295
FXSQ100M					1.9	15	0.225	1.5	326	306
FXSQ125M					2.5	15	0.225	2.0	435	415

Symbols:

MCA : Min. Circuit Amps (A)
MFA : Max. Fuse Amps (See note 5)
KW : Fan Motor Rated Output(KW)
FLA : Full Load Amps(A)
IFM : Indoor Fan Motor

Note:

1. Voltage range

   Units are suitable for use on electrical systems where voltage supplied to unit terminals is not below or above listed range limits.

2. Maximum allowable voltage unbalance between phases is 2%.

3. MCA/MFA

   MCA = 1.25 X FLA

   MFA ≦ 4 X FLA

   (Next lower standard fuse rating. Min. 15A)

4. Select wire size based on the MCA.

5. Instead of fuse, use Circuit Breaker.

C : 4D036936A

7. Capacity Tables

7.1 Cooling Capacity

FXSQ-M **[50/60Hz]**

Cooling capacity

Unit Size	Outdoor air temp. °CDB	Indoor air temp. 14.0°CWB 20°CDB TC	SHC	16.0°CWB 23°CDB TC	SHC	18.0°CWB 26°CDB TC	SHC	19.0°CWB 27°CDB TC	SHC	20.0°CWB 28°CDB TC	SHC	22.0°CWB 30°CDB TC	SHC	24.0°CWB 32°CDB TC	SHC
20	10.0	1.5	1.4	1.8	1.6	2.1	1.7	2.2	1.8	2.3	1.9	2.6	1.9	2.9	1.9
	12.0	1.5	1.4	1.8	1.6	2.1	1.7	2.2	1.8	2.3	1.9	2.6	1.9	2.9	1.9
	14.0	1.5	1.4	1.8	1.6	2.1	1.7	2.2	1.8	2.3	1.9	2.6	1.9	2.8	1.8
	16.0	1.5	1.4	1.8	1.6	2.1	1.7	2.2	1.8	2.3	1.9	2.6	1.9	2.8	1.8
	18.0	1.5	1.4	1.8	1.6	2.1	1.7	2.2	1.8	2.3	1.9	2.6	1.9	2.7	1.8
	20.0	1.5	1.4	1.8	1.6	2.1	1.7	2.2	1.8	2.3	1.9	2.6	1.9	2.7	1.8
	21.0	1.5	1.4	1.8	1.6	2.1	1.7	2.2	1.8	2.3	1.9	2.6	1.9	2.7	1.8
	23.0	1.5	1.4	1.8	1.6	2.1	1.7	2.2	1.8	2.3	1.9	2.6	1.8	2.6	1.7
	25.0	1.5	1.4	1.8	1.6	2.1	1.7	2.2	1.8	2.3	1.9	2.6	1.8	2.6	1.7
	27.0	1.5	1.4	1.8	1.6	2.1	1.7	2.2	1.8	2.3	1.9	2.5	1.8	2.5	1.7
	29.0	1.5	1.4	1.8	1.6	2.1	1.7	2.2	1.8	2.3	1.9	2.4	1.8	2.5	1.7
	31.0	1.5	1.4	1.8	1.6	2.1	1.7	2.2	1.8	2.3	1.9	2.4	1.8	2.5	1.7
	33.0	1.5	1.4	1.8	1.6	2.1	1.7	2.2	1.8	2.3	1.9	2.4	1.8	2.4	1.7
	35.0	1.5	1.4	1.8	1.6	2.1	1.7	2.2	1.8	2.3	1.8	2.4	1.8	2.4	1.7
	37.0	1.5	1.4	1.8	1.6	2.1	1.7	2.2	1.8	2.3	1.8	2.3	1.7	2.3	1.6
	39.0	1.5	1.4	1.8	1.6	2.1	1.7	2.2	1.8	2.2	1.8	2.3	1.7	2.3	1.6
25	10.0	1.9	1.7	2.3	1.9	2.6	2.0	2.8	2.0	3.0	2.2	3.4	2.3	3.7	2.3
	12.0	1.9	1.7	2.3	1.9	2.6	2.0	2.8	2.0	3.0	2.2	3.4	2.3	3.6	2.2
	14.0	1.9	1.7	2.3	1.9	2.6	2.0	2.8	2.0	3.0	2.2	3.4	2.3	3.6	2.2
	16.0	1.9	1.7	2.3	1.9	2.6	2.0	2.8	2.0	3.0	2.2	3.4	2.3	3.5	2.2
	18.0	1.9	1.7	2.3	1.9	2.6	2.0	2.8	2.0	3.0	2.2	3.4	2.3	3.4	2.1
	20.0	1.9	1.7	2.3	1.9	2.6	2.0	2.8	2.0	3.0	2.2	3.4	2.3	3.4	2.1
	21.0	1.9	1.7	2.3	1.9	2.6	2.0	2.8	2.0	3.0	2.2	3.4	2.3	3.4	2.1
	23.0	1.9	1.7	2.3	1.9	2.6	2.0	2.8	2.0	3.0	2.2	3.3	2.2	3.3	2.1
	25.0	1.9	1.7	2.3	1.9	2.6	2.0	2.8	2.0	3.0	2.2	3.2	2.2	3.3	2.1
	27.0	1.9	1.7	2.3	1.9	2.6	2.0	2.8	2.0	3.0	2.2	3.2	2.2	3.2	2.0
	29.0	1.9	1.7	2.3	1.9	2.6	2.0	2.8	2.0	3.0	2.2	3.1	2.1	3.2	2.0
	31.0	1.9	1.7	2.3	1.9	2.6	2.0	2.8	2.0	3.0	2.2	3.1	2.1	3.1	2.0
	33.0	1.9	1.7	2.3	1.9	2.6	2.0	2.8	2.0	3.0	2.2	3.0	2.1	3.1	2.0
	35.0	1.9	1.7	2.3	1.9	2.6	2.0	2.8	2.1	3.0	2.2	3.0	2.1	3.0	2.0
	37.0	1.9	1.7	2.3	1.9	2.6	2.0	2.8	2.1	2.9	2.2	3.0	2.1	3.0	2.0
	39.0	1.9	1.7	2.3	1.9	2.6	2.0	2.8	2.1	2.9	2.2	2.9	2.1	3.0	2.0
32	10.0	2.4	2.0	2.9	2.3	3.4	2.5	3.6	2.5	3.8	2.7	4.3	2.8	4.7	2.8
	12.0	2.4	2.0	2.9	2.3	3.4	2.5	3.6	2.5	3.8	2.7	4.3	2.8	4.7	2.7
	14.0	2.4	2.0	2.9	2.3	3.4	2.5	3.6	2.5	3.8	2.7	4.3	2.8	4.6	2.7
	16.0	2.4	2.0	2.9	2.3	3.4	2.5	3.6	2.5	3.8	2.7	4.3	2.8	4.6	2.7
	18.0	2.4	2.0	2.9	2.3	3.4	2.5	3.6	2.5	3.8	2.7	4.3	2.8	4.5	2.6
	20.0	2.4	2.0	2.9	2.3	3.4	2.5	3.6	2.5	3.8	2.7	4.3	2.8	4.4	2.6
	21.0	2.4	2.0	2.9	2.3	3.4	2.5	3.6	2.5	3.8	2.7	4.3	2.8	4.4	2.6
	23.0	2.4	2.0	2.9	2.3	3.4	2.5	3.6	2.5	3.8	2.7	4.2	2.7	4.3	2.6
	25.0	2.4	2.0	2.9	2.3	3.4	2.5	3.6	2.5	3.8	2.7	4.2	2.7	4.3	2.5
	27.0	2.4	2.0	2.9	2.3	3.4	2.5	3.6	2.5	3.8	2.7	4.1	2.6	4.2	2.5
	29.0	2.4	2.0	2.9	2.3	3.4	2.5	3.6	2.5	3.8	2.7	4.1	2.6	4.2	2.5
	31.0	2.4	2.0	2.9	2.3	3.4	2.5	3.6	2.5	3.8	2.7	4.0	2.6	4.1	2.5
	33.0	2.4	2.0	2.9	2.3	3.4	2.5	3.6	2.5	3.8	2.7	3.9	2.6	4.0	2.4
	35.0	2.4	2.0	2.9	2.3	3.4	2.5	3.6	2.5	3.8	2.7	3.9	2.6	4.0	2.4
	37.0	2.4	2.0	2.9	2.3	3.4	2.5	3.6	2.5	3.7	2.7	3.8	2.5	3.9	2.4
	39.0	2.4	2.0	2.9	2.3	3.4	2.5	3.6	2.6	3.7	2.6	3.8	2.5	3.8	2.4
40	10.0	3.0	2.6	3.6	3.0	4.2	3.2	4.5	3.3	4.8	3.6	5.4	3.3	5.9	3.6
	12.0	3.0	2.6	3.6	3.0	4.2	3.2	4.5	3.3	4.8	3.6	5.4	3.3	5.8	3.5
	14.0	3.0	2.6	3.6	3.0	4.2	3.2	4.5	3.3	4.8	3.6	5.4	3.3	5.7	3.5
	16.0	3.0	2.6	3.6	3.0	4.2	3.2	4.5	3.3	4.8	3.6	5.4	3.3	5.6	3.5
	18.0	3.0	2.6	3.6	3.0	4.2	3.2	4.5	3.3	4.8	3.6	5.4	3.3	5.5	3.4
	20.0	3.0	2.6	3.6	3.0	4.2	3.2	4.5	3.3	4.8	3.6	5.4	3.3	5.5	3.4
	21.0	3.0	2.6	3.6	3.0	4.2	3.2	4.5	3.3	4.8	3.6	5.3	3.3	5.4	3.3
	23.0	3.0	2.6	3.6	3.0	4.2	3.2	4.5	3.3	4.8	3.6	5.2	3.2	5.3	3.3
	25.0	3.0	2.6	3.6	3.0	4.2	3.2	4.5	3.3	4.8	3.6	5.2	3.2	5.3	3.3
	27.0	3.0	2.6	3.6	3.0	4.2	3.2	4.5	3.3	4.8	3.6	5.1	3.2	5.2	3.3
	29.0	3.0	2.6	3.6	3.0	4.2	3.2	4.5	3.3	4.8	3.6	5.0	3.1	5.1	3.2
	31.0	3.0	2.6	3.6	3.0	4.2	3.2	4.5	3.3	4.8	3.6	4.9	3.1	5.0	3.2
	33.0	3.0	2.6	3.6	3.0	4.2	3.2	4.5	3.3	4.8	3.6	4.9	3.1	5.0	3.2
	35.0	3.0	2.6	3.6	3.0	4.2	3.2	4.5	3.3	4.7	3.6	4.8	3.0	4.9	3.1
	37.0	3.0	2.6	3.6	3.0	4.2	3.2	4.5	3.3	4.6	3.5	4.7	3.0	4.8	3.1
	39.0	3.0	2.6	3.6	3.0	4.2	3.2	4.5	3.3	4.6	3.5	4.7	3.0	4.8	3.0
50	10.0	3.8	3.2	4.5	3.7	5.2	3.9	5.6	4.1	6.0	4.3	6.7	4.0	7.4	4.4
	12.0	3.8	3.2	4.5	3.7	5.2	3.9	5.6	4.1	6.0	4.3	6.7	4.0	7.3	4.4
	14.0	3.8	3.2	4.5	3.7	5.2	3.9	5.6	4.1	6.0	4.3	6.7	4.0	7.2	4.3
	16.0	3.8	3.2	4.5	3.7	5.2	3.9	5.6	4.1	6.0	4.3	6.7	4.0	7.1	4.3
	18.0	3.8	3.2	4.5	3.7	5.2	3.9	5.6	4.1	6.0	4.3	6.7	4.0	7.0	4.3
	20.0	3.8	3.2	4.5	3.7	5.2	3.9	5.6	4.1	6.0	4.3	6.7	4.0	6.9	4.2
	21.0	3.8	3.2	4.5	3.7	5.2	3.9	5.6	4.1	6.0	4.3	6.7	4.0	6.8	4.2
	23.0	3.8	3.2	4.5	3.7	5.2	3.9	5.6	4.1	6.0	4.3	6.6	4.0	6.7	4.2
	25.0	3.8	3.2	4.5	3.7	5.2	3.9	5.6	4.1	6.0	4.3	6.5	4.0	6.6	4.1
	27.0	3.8	3.2	4.5	3.7	5.2	3.9	5.6	4.1	6.0	4.3	6.4	3.9	6.6	4.1
	29.0	3.8	3.2	4.5	3.7	5.2	3.9	5.6	4.1	6.0	4.3	6.3	3.9	6.5	4.0
	31.0	3.8	3.2	4.5	3.7	5.2	3.9	5.6	4.1	6.0	4.3	6.2	3.8	6.4	4.0
	33.0	3.8	3.2	4.5	3.7	5.2	3.9	5.6	4.1	6.0	4.3	6.1	3.8	6.3	3.9
	35.0	3.8	3.2	4.5	3.7	5.2	3.9	5.6	4.1	5.9	4.3	6.0	3.8	6.2	3.9
	37.0	3.8	3.2	4.5	3.7	5.2	3.9	5.6	4.1	5.8	4.3	5.9	3.7	6.1	3.9
	39.0	3.8	3.2	4.5	3.7	5.2	3.9	5.6	4.1	5.7	4.2	5.8	3.7	6.0	3.8

Cooling capacity

Unit Size	Outdoor air temp. °CDB	Indoor air temp. 14.0°CWB 20°CDB TC	SHC	16.0°CWB 23°CDB TC	SHC	18.0°CWB 26°CDB TC	SHC	19.0°CWB 27°CDB TC	SHC	20.0°CWB 28°CDB TC	SHC	22.0°CWB 30°CDB TC	SHC	24.0°CWB 32°CDB TC	SHC
63	10.0	4.8	4.1	5.7	4.7	6.6	4.9	7.1	5.2	7.6	5.5	8.5	5.6	9.3	5.6
	12.0	4.8	4.1	5.7	4.7	6.6	4.9	7.1	5.2	7.6	5.5	8.5	5.6	9.2	5.6
	14.0	4.8	4.1	5.7	4.7	6.6	4.9	7.1	5.2	7.6	5.5	8.5	5.6	9.1	5.5
	16.0	4.8	4.1	5.7	4.7	6.6	4.9	7.1	5.2	7.6	5.5	8.5	5.6	9.0	5.4
	18.0	4.8	4.1	5.7	4.7	6.6	4.9	7.1	5.2	7.6	5.5	8.5	5.6	8.8	5.3
	20.0	4.8	4.1	5.7	4.7	6.6	4.9	7.1	5.2	7.6	5.5	8.5	5.6	8.7	5.3
	21.0	4.8	4.1	5.7	4.7	6.6	4.9	7.1	5.2	7.6	5.5	8.5	5.6	8.7	5.2
	23.0	4.8	4.1	5.7	4.7	6.6	4.9	7.1	5.2	7.6	5.5	8.4	5.5	8.5	5.2
	25.0	4.8	4.1	5.7	4.7	6.6	4.9	7.1	5.2	7.6	5.5	8.3	5.5	8.4	5.1
	27.0	4.8	4.1	5.7	4.7	6.6	4.9	7.1	5.2	7.6	5.5	8.1	5.4	8.3	5.1
	29.0	4.8	4.1	5.7	4.7	6.6	4.9	7.1	5.2	7.6	5.5	8.0	5.3	8.2	5.1
	31.0	4.8	4.1	5.7	4.7	6.6	4.9	7.1	5.2	7.6	5.5	7.9	5.3	8.1	5.0
	33.0	4.8	4.1	5.7	4.7	6.6	4.9	7.1	5.2	7.6	5.5	7.9	5.2	7.9	5.0
	35.0	4.8	4.1	5.7	4.7	6.6	4.9	7.1	5.2	7.5	5.5	7.7	5.2	7.8	4.9
	37.0	4.8	4.1	5.7	4.7	6.6	4.9	7.1	5.2	7.4	5.4	7.5	5.2	7.7	4.9
	39.0	4.8	4.1	5.7	4.7	6.6	4.9	7.1	5.2	7.2	5.4	7.4	5.1	7.6	4.9
80	10.0	6.1	5.0	7.2	5.7	8.4	6.1	9.0	6.3	9.6	6.6	10.8	6.8	11.8	6.9
	12.0	6.1	5.0	7.2	5.7	8.4	6.1	9.0	6.3	9.6	6.6	10.8	6.8	11.7	6.8
	14.0	6.1	5.0	7.2	5.7	8.4	6.1	9.0	6.3	9.6	6.6	10.8	6.8	11.5	6.7
	16.0	6.1	5.0	7.2	5.7	8.4	6.1	9.0	6.3	9.6	6.6	10.8	6.8	11.4	6.6
	18.0	6.1	5.0	7.2	5.7	8.4	6.1	9.0	6.3	9.6	6.6	10.8	6.8	11.2	6.5
	20.0	6.1	5.0	7.2	5.7	8.4	6.1	9.0	6.3	9.6	6.6	10.8	6.8	11.1	6.4
	21.0	6.1	5.0	7.2	5.7	8.4	6.1	9.0	6.3	9.6	6.6	10.8	6.8	11.0	6.4
	23.0	6.1	5.0	7.2	5.7	8.4	6.1	9.0	6.3	9.6	6.6	10.6	6.7	10.8	6.3
	25.0	6.1	5.0	7.2	5.7	8.4	6.1	9.0	6.3	9.6	6.6	10.5	6.6	10.7	6.2
	27.0	6.1	5.0	7.2	5.7	8.4	6.1	9.0	6.3	9.6	6.6	10.3	6.5	10.5	6.2
	29.0	6.1	5.0	7.2	5.7	8.4	6.1	9.0	6.3	9.6	6.6	10.2	6.5	10.4	6.1
	31.0	6.1	5.0	7.2	5.7	8.4	6.1	9.0	6.3	9.6	6.6	10.0	6.4	10.2	6.1
	33.0	6.1	5.0	7.2	5.7	8.4	6.1	9.0	6.3	9.6	6.6	9.8	6.3	10.1	6.1
	35.0	6.1	5.0	7.2	5.7	8.4	6.1	9.0	6.3	9.5	6.6	9.7	6.3	9.9	6.0
	37.0	6.1	5.0	7.2	5.7	8.4	6.1	9.0	6.4	9.4	6.5	9.4	6.2	9.6	5.9
	39.0	6.1	5.0	7.2	5.7	8.4	6.1	9.0	6.4	9.2	6.5	9.4	6.2	9.6	5.9
100	10.0	7.6	6.2	9.0	7.1	10.5	7.6	11.2	7.9	11.9	8.3	13.4	8.5	14.7	8.5
	12.0	7.6	6.2	9.0	7.1	10.5	7.6	11.2	7.9	11.9	8.3	13.4	8.5	14.5	8.4
	14.0	7.6	6.2	9.0	7.1	10.5	7.6	11.2	7.9	11.9	8.3	13.4	8.5	14.4	8.3
	16.0	7.6	6.2	9.0	7.1	10.5	7.6	11.2	7.9	11.9	8.3	13.4	8.5	14.2	8.2
	18.0	7.6	6.2	9.0	7.1	10.5	7.6	11.2	7.9	11.9	8.3	13.4	8.5	14.0	8.1
	20.0	7.6	6.2	9.0	7.1	10.5	7.6	11.2	7.9	11.9	8.3	13.4	8.5	13.8	8.0
	21.0	7.6	6.2	9.0	7.1	10.5	7.6	11.2	7.9	11.9	8.3	13.4	8.5	13.7	7.9
	23.0	7.6	6.2	9.0	7.1	10.5	7.6	11.2	7.9	11.9	8.3	13.2	8.4	13.5	7.8
	25.0	7.6	6.2	9.0	7.1	10.5	7.6	11.2	7.9	11.9	8.3	13.0	8.3	13.3	7.7
	27.0	7.6	6.2	9.0	7.1	10.5	7.6	11.2	7.9	11.9	8.3	12.8	8.1	13.1	7.7
	29.0	7.6	6.2	9.0	7.1	10.5	7.6	11.2	7.9	11.9	8.3	12.6	8.0	12.9	7.6
	31.0	7.6	6.2	9.0	7.1	10.5	7.6	11.2	7.9	11.9	8.3	12.4	8.0	12.7	7.5
	33.0	7.6	6.2	9.0	7.1	10.5	7.6	11.2	7.9	11.9	8.3	12.2	7.9	12.5	7.5
	35.0	7.6	6.2	9.0	7.1	10.5	7.6	11.2	7.9	11.8	8.2	12.1	7.8	12.3	7.5
	37.0	7.6	6.2	9.0	7.1	10.5	7.6	11.2	7.9	11.6	8.1	11.9	7.8	12.2	7.4
	39.0	7.6	6.2	9.0	7.1	10.5	7.6	11.2	7.9	11.4	8.1	11.7	7.7	12.0	7.3
125	10.0	9.5	7.6	11.3	8.9	13.1	9.6	14.0	9.9	14.9	10.3	16.8	10.7	18.4	11.0
	12.0	9.5	7.8	11.3	8.9	13.1	9.6	14.0	9.9	14.9	10.3	16.8	10.7	18.2	10.9
	14.0	9.5	7.8	11.3	8.9	13.1	9.6	14.0	9.9	14.9	10.3	16.8	10.7	18.0	10.7
	16.0	9.5	7.8	11.3	8.9	13.1	9.6	14.0	9.9	14.9	10.3	16.8	10.7	17.7	10.6
	18.0	9.5	7.8	11.3	8.9	13.1	9.6	14.0	9.9	14.9	10.3	16.8	10.7	17.5	10.4
	20.0	9.5	7.8	11.3	8.9	13.1	9.6	14.0	9.9	14.9	10.3	16.8	10.7	17.2	10.3
	21.0	9.5	7.8	11.3	8.9	13.1	9.6	14.0	9.9	14.9	10.3	16.8	10.7	17.1	10.2
	23.0	9.5	7.8	11.3	8.9	13.1	9.6	14.0	9.9	14.9	10.3	16.5	10.6	16.9	10.1
	25.0	9.5	7.8	11.3	8.9	13.1	9.6	14.0	9.9	14.9	10.3	16.3	10.4	16.6	10.0
	27.0	9.5	7.8	11.3	8.9	13.1	9.6	14.0	9.9	14.9	10.3	16.1	10.3	16.4	9.9
	29.0	9.5	7.8	11.3	8.9	13.1	9.6	14.0	9.9	14.9	10.3	15.8	10.1	16.2	9.8
	31.0	9.5	7.8	11.3	8.9	13.1	9.6	14.0	9.9	14.9	10.3	15.6	10.0	15.9	9.6
	33.0	9.5	7.8	11.3	8.9	13.1	9.6	14.0	9.9	14.9	10.3	15.3	9.9	15.7	9.5
	35.0	9.5	7.8	11.3	8.9	13.1	9.6	14.0	9.9	14.8	10.2	15.1	9.8	15.4	9.4
	37.0	9.5	7.8	11.3	8.9	13.1	9.6	14.0	9.9	14.5	10.1	14.9	9.7	15.2	9.3
	39.0	9.5	7.8	11.3	8.9	13.1	9.6	14.0	10.0	14.3	9.9	14.6	9.6	15.0	9.2

TC Total capacity ; kW
SHC Sensible heat capacity ; kW

Refer to Outdoor Unit Capacity Tables : on page 339~, for the actual performance data of each indoor and outdoor unit combination.

7.2 Heating Capacity

FXSQ-M [50/60Hz]

Heating capacity

Unit Size	Outdoor air temp.		Indoor air temp. °CDB					
			16.0	18.0	20.0	21.0	22.0	24.0
	°CDB	°CWB	kW	kW	kW	kW	kW	kW
20	-19.8	-20.0	1.5	1.5	1.5	1.5	1.5	1.5
	-18.8	-19.0	1.5	1.5	1.5	1.5	1.5	1.5
	-16.7	-17.0	1.6	1.6	1.6	1.6	1.6	1.6
	-14.7	-15.0	1.7	1.7	1.7	1.7	1.8	1.8
	-12.6	-13.0	1.8	1.8	1.8	1.8	1.8	1.8
	-10.5	-11.0	1.9	1.9	1.9	1.9	1.9	1.9
	-9.5	-10.0	1.9	1.9	1.9	1.9	1.9	1.9
	-8.5	-9.1	2.0	1.9	1.9	1.9	1.9	1.9
	-7.0	-7.6	2.0	2.0	2.0	2.0	2.0	2.0
	-5.0	-5.6	2.1	2.1	2.1	2.1	2.1	2.1
	-3.0	-3.7	2.2	2.2	2.2	2.2	2.2	2.2
	0.0	-0.7	2.3	2.3	2.3	2.3	2.2	2.2
	3.0	2.2	2.5	2.5	2.4	2.4	2.2	2.2
	5.0	4.1	2.6	2.6	2.5	2.4	2.3	2.2
	7.0	6.0	2.7	2.7	2.6	2.5	2.4	2.3
	9.0	7.9	2.8	2.8	2.7	2.6	2.5	2.4
	11.0	9.8	2.8	2.8	2.8	2.7	2.6	2.5
	13.0	11.8	2.8	2.8	2.8	2.8	2.7	2.6
	15.0	13.7	2.8	2.8	2.8	2.8	2.8	2.7
25	-19.8	-20.0	1.9	1.9	1.9	1.9	1.9	1.9
	-18.8	-19.0	1.9	1.9	1.9	1.9	1.9	1.9
	-16.7	-17.0	2.1	2.0	2.0	2.0	2.0	2.0
	-14.7	-15.0	2.2	2.2	2.2	2.2	2.2	2.1
	-12.6	-13.0	2.3	2.3	2.3	2.3	2.3	2.3
	-10.5	-11.0	2.4	2.4	2.4	2.4	2.4	2.4
	-9.5	-10.0	2.5	2.4	2.4	2.4	2.4	2.4
	-8.5	-9.1	2.5	2.5	2.5	2.5	2.5	2.5
	-7.0	-7.6	2.6	2.6	2.6	2.6	2.6	2.6
	-5.0	-5.6	2.7	2.7	2.7	2.7	2.7	2.7
	-3.0	-3.7	2.8	2.8	2.8	2.8	2.8	2.8
	0.0	-0.7	3.0	3.0	3.0	3.0	3.0	2.8
	3.0	2.2	3.1	3.1	3.1	3.1	3.0	2.8
	5.0	4.1	3.3	3.2	3.2	3.1	3.0	2.8
	7.0	6.0	3.4	3.4	3.2	3.1	3.0	2.8
	9.0	7.9	3.5	3.4	3.2	3.1	3.0	2.8
	11.0	9.8	3.6	3.4	3.2	3.1	3.0	2.8
	13.0	11.8	3.6	3.4	3.2	3.1	3.0	2.8
	15.0	13.7	3.6	3.4	3.2	3.1	3.0	2.8
32	-19.8	-20.0	2.4	2.3	2.3	2.3	2.3	2.3
	-18.8	-19.0	2.4	2.4	2.4	2.4	2.4	2.4
	-16.7	-17.0	2.6	2.6	2.6	2.6	2.6	2.5
	-14.7	-15.0	2.7	2.7	2.7	2.7	2.7	2.7
	-12.6	-13.0	2.9	2.8	2.8	2.8	2.8	2.8
	-10.5	-11.0	3.0	3.0	3.0	3.0	3.0	3.0
	-9.5	-10.0	3.1	3.1	3.1	3.1	3.0	3.0
	-8.5	-9.1	3.1	3.1	3.1	3.1	3.1	3.1
	-7.0	-7.6	3.2	3.2	3.2	3.2	3.2	3.2
	-5.0	-5.6	3.4	3.4	3.4	3.4	3.4	3.4
	-3.0	-3.7	3.5	3.5	3.5	3.5	3.5	3.5
	0.0	-0.7	3.7	3.7	3.7	3.7	3.7	3.5
	3.0	2.2	3.9	3.9	3.9	3.9	3.7	3.5
	5.0	4.1	4.0	4.0	4.0	3.9	3.7	3.5
	7.0	6.0	4.2	4.1	4.0	3.9	3.7	3.5
	9.0	7.9	4.3	4.3	4.0	3.9	3.7	3.5
	11.0	9.8	4.5	4.3	4.0	3.9	3.7	3.5
	13.0	11.8	4.5	4.3	4.0	3.9	3.7	3.5
	15.0	13.7	4.5	4.3	4.0	3.9	3.7	3.5

Heating capacity

Unit Size	Outdoor air temp.		Indoor air temp. °CDB					
			16.0	18.0	20.0	21.0	22.0	24.0
	°CDB	°CWB	kW	kW	kW	kW	kW	kW
40	-19.8	-20.0	3.0	2.9	2.9	2.9	2.9	2.9
	-18.8	-19.0	3.0	3.0	3.0	3.0	3.0	3.0
	-16.7	-17.0	3.2	3.2	3.2	3.2	3.2	3.2
	-14.7	-15.0	3.4	3.4	3.4	3.4	3.4	3.4
	-12.6	-13.0	3.6	3.6	3.5	3.5	3.5	3.5
	-10.5	-11.0	3.7	3.7	3.7	3.7	3.7	3.7
	-9.5	-10.0	3.8	3.8	3.8	3.8	3.8	3.8
	-8.5	-9.1	3.9	3.9	3.9	3.9	3.9	3.9
	-7.0	-7.6	4.0	4.0	4.0	4.0	4.0	4.0
	-5.0	-5.6	4.2	4.2	4.2	4.2	4.2	4.2
	-3.0	-3.7	4.4	4.4	4.4	4.4	4.4	4.4
	0.0	-0.7	4.7	4.6	4.6	4.6	4.6	4.4
	3.0	2.2	4.9	4.9	4.8	4.8	4.7	4.4
	5.0	4.1	5.1	5.1	5.0	4.8	4.7	4.4
	7.0	6.0	5.2	5.2	5.0	4.8	4.7	4.4
	9.0	7.9	5.4	5.3	5.0	4.8	4.7	4.4
	11.0	9.8	5.6	5.3	5.0	4.8	4.7	4.4
	13.0	11.8	5.6	5.3	5.0	4.8	4.7	4.4
	15.0	13.7	5.6	5.3	5.0	4.8	4.7	4.4
50	-19.8	-20.0	3.7	3.7	3.7	3.7	3.7	3.7
	-18.8	-19.0	3.8	3.8	3.8	3.8	3.8	3.8
	-16.7	-17.0	4.1	4.0	4.0	4.0	4.0	4.0
	-14.7	-15.0	4.3	4.3	4.2	4.2	4.2	4.2
	-12.6	-13.0	4.5	4.5	4.5	4.5	4.5	4.5
	-10.5	-11.0	4.7	4.7	4.7	4.7	4.7	4.7
	-9.5	-10.0	4.8	4.8	4.8	4.8	4.8	4.8
	-8.5	-9.1	4.9	4.9	4.9	4.9	4.9	4.9
	-7.0	-7.6	5.1	5.1	5.1	5.1	5.1	5.1
	-5.0	-5.6	5.3	5.3	5.3	5.3	5.3	5.3
	-3.0	-3.7	5.5	5.5	5.5	5.5	5.5	5.5
	0.0	-0.7	5.9	5.8	5.8	5.8	5.8	5.5
	3.0	2.2	6.2	6.2	6.1	6.1	5.9	5.5
	5.0	4.1	6.4	6.4	6.3	6.1	5.9	5.5
	7.0	6.0	6.6	6.6	6.3	6.1	5.9	5.5
	9.0	7.9	6.8	6.7	6.3	6.1	5.9	5.5
	11.0	9.8	7.0	6.7	6.3	6.1	5.9	5.5
	13.0	11.8	7.1	6.7	6.3	6.1	5.9	5.5
	15.0	13.7	7.1	6.7	6.3	6.1	5.9	5.5
63	-19.8	-20.0	4.7	4.7	4.7	4.7	4.7	4.7
	-18.8	-19.0	4.9	4.9	4.8	4.8	4.8	4.8
	-16.7	-17.0	5.1	5.1	5.1	5.1	5.1	5.1
	-14.7	-15.0	5.4	5.4	5.4	5.4	5.4	5.4
	-12.6	-13.0	5.7	5.7	5.7	5.7	5.7	5.7
	-10.5	-11.0	6.0	6.0	6.0	6.0	6.0	5.9
	-9.5	-10.0	6.1	6.1	6.1	6.1	6.1	6.1
	-8.5	-9.1	6.3	6.3	6.2	6.2	6.2	6.2
	-7.0	-7.6	6.5	6.5	6.4	6.4	6.4	6.4
	-5.0	-5.6	6.8	6.7	6.7	6.7	6.7	6.7
	-3.0	-3.7	7.0	7.0	7.0	7.0	7.0	7.0
	0.0	-0.7	7.5	7.4	7.4	7.4	7.4	7.0
	3.0	2.2	7.9	7.8	7.8	7.7	7.5	7.0
	5.0	4.1	8.4	8.1	8.0	7.7	7.5	7.0
	7.0	6.0	8.7	8.5	8.0	7.7	7.5	7.0
	9.0	7.9	8.9	8.5	8.0	7.7	7.5	7.0
	11.0	9.8	9.0	8.5	8.0	7.7	7.5	7.0
	13.0	11.8	9.0	8.5	8.0	7.7	7.5	7.0
	15.0	13.7	9.0	8.5	8.0	7.7	7.5	7.0

Heating capacity

Unit Size	Outdoor air temp.		Indoor air temp. °CDB					
			16.0	18.0	20.0	21.0	22.0	24.0
	°CDB	°CWB	kW	kW	kW	kW	kW	kW
80	-19.8	-20.0	5.9	5.9	5.9	5.9	5.9	5.8
	-18.8	-19.0	6.1	6.1	6.0	6.0	6.0	6.0
	-16.7	-17.0	6.4	6.4	6.4	6.4	6.4	6.4
	-14.7	-15.0	6.8	6.8	6.8	6.7	6.7	6.7
	-12.6	-13.0	7.1	7.1	7.1	7.1	7.1	7.1
	-10.5	-11.0	7.5	7.5	7.5	7.5	7.4	7.4
	-9.5	-10.0	7.7	7.7	7.6	7.6	7.6	7.6
	-8.5	-9.1	7.8	7.8	7.8	7.8	7.8	7.8
	-7.0	-7.6	8.1	8.1	8.1	8.1	8.0	8.0
	-5.0	-5.6	8.4	8.4	8.4	8.4	8.4	8.4
	-3.0	-3.7	8.8	8.8	8.7	8.7	8.7	8.7
	0.0	-0.7	9.3	9.3	9.3	9.3	9.3	8.7
	3.0	2.2	9.8	9.8	9.8	9.7	9.4	8.7
	5.0	4.1	10.2	10.1	10.0	9.7	9.4	8.7
	7.0	6.0	10.5	10.5	10.0	9.7	9.4	8.7
	9.0	7.9	10.8	10.6	10.0	9.7	9.4	8.7
	11.0	9.8	11.2	10.6	10.0	9.7	9.4	8.7
	13.0	11.8	11.3	10.6	10.0	9.7	9.4	8.7
	15.0	13.7	11.3	10.6	10.0	9.7	9.4	8.7
100	-19.8	-20.0	7.4	7.4	7.3	7.3	7.3	7.3
	-18.8	-19.0	7.6	7.6	7.6	7.5	7.5	7.5
	-16.7	-17.0	8.0	8.0	8.0	8.0	8.0	8.0
	-14.7	-15.0	8.5	8.5	8.4	8.4	8.4	8.4
	-12.6	-13.0	8.9	8.9	8.9	8.9	8.9	8.8
	-10.5	-11.0	9.4	9.3	9.3	9.3	9.3	9.3
	-9.5	-10.0	9.6	9.6	9.5	9.5	9.5	9.5
	-8.5	-9.1	9.8	9.8	9.7	9.7	9.7	9.7
	-7.0	-7.6	10.1	10.1	10.1	10.1	10.1	10.0
	-5.0	-5.6	10.6	10.5	10.5	10.5	10.5	10.5
	-3.0	-3.7	11.0	11.0	10.9	10.9	10.9	10.9
	0.0	-0.7	11.6	11.6	11.6	11.6	11.6	10.9
	3.0	2.2	12.3	12.3	12.2	12.1	11.7	10.9
	5.0	4.1	12.7	12.7	12.5	12.1	11.7	10.9
	7.0	6.0	13.1	13.1	12.5	12.1	11.7	10.9
	9.0	7.9	13.5	13.3	12.5	12.1	11.7	10.9
	11.0	9.8	14.0	13.3	12.5	12.1	11.7	10.9
	13.0	11.8	14.1	13.3	12.5	12.1	11.7	10.9
	15.0	13.7	14.1	13.3	12.5	12.1	11.7	10.9
125	-19.8	-20.0	9.4	9.4	9.4	9.4	9.4	9.3
	-18.8	-19.0	9.7	9.7	9.7	9.7	9.6	9.6
	-16.7	-17.0	10.3	10.2	10.2	10.2	10.2	10.2
	-14.7	-15.0	10.9	10.8	10.8	10.8	10.8	10.7
	-12.6	-13.0	11.4	11.4	11.4	11.4	11.3	11.3
	-10.5	-11.0	12.0	12.0	11.9	11.9	11.9	11.9
	-9.5	-10.0	12.3	12.2	12.2	12.2	12.2	12.2
	-8.5	-9.1	12.5	12.5	12.5	12.5	12.5	12.4
	-7.0	-7.6	13.0	12.9	12.9	12.9	12.9	12.8
	-5.0	-5.6	13.5	13.5	13.5	13.4	13.4	13.4
	-3.0	-3.7	14.1	14.0	14.0	14.0	14.0	13.9
	0.0	-0.7	14.9	14.9	14.8	14.8	14.8	13.9
	3.0	2.2	15.7	15.7	15.7	15.5	15.5	13.9
	5.0	4.1	16.3	16.2	16.0	15.5	15.5	13.9
	7.0	6.0	16.8	16.8	16.0	15.5	15.5	13.9
	9.0	7.9	17.3	17.0	16.0	15.5	15.5	13.9
	11.0	9.8	17.9	17.0	16.0	15.5	15.5	13.9
	13.0	11.8	18.1	17.0	16.0	15.5	15.5	13.9
	15.0	13.7	18.1	17.0	16.0	15.5	15.5	13.9

Refer to Outdoor Unit Capacity Tables : on page 342~, for the actual performance data of each indoor and outdoor unit combination.

8. Fan Performances

8.1 50Hz

FXSQ20 · 25M

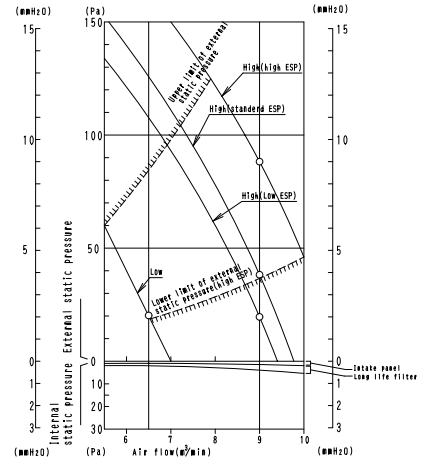

C : 3D036959-5

FXSQ32M

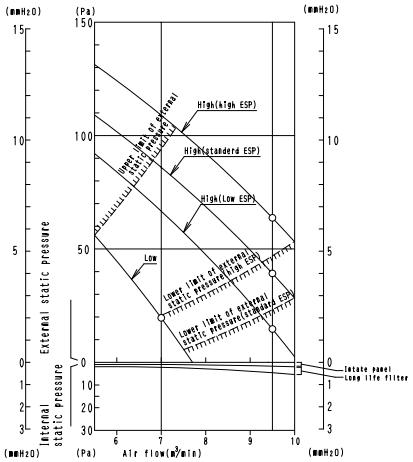

C : 3D036960-5

FXSQ40M

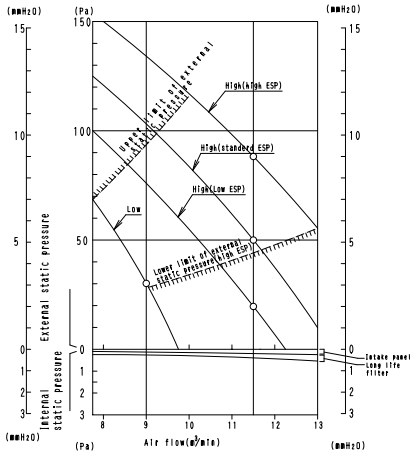

C : 3D036961-5

FXSQ50M

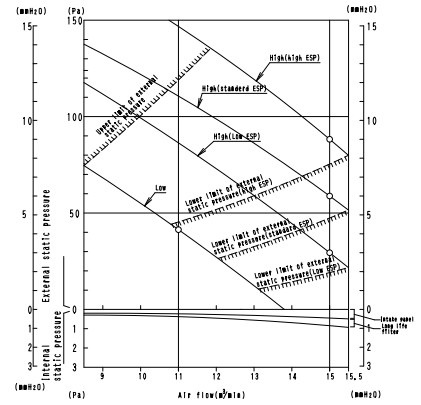

C : 3D036962-5

FXSQ63M

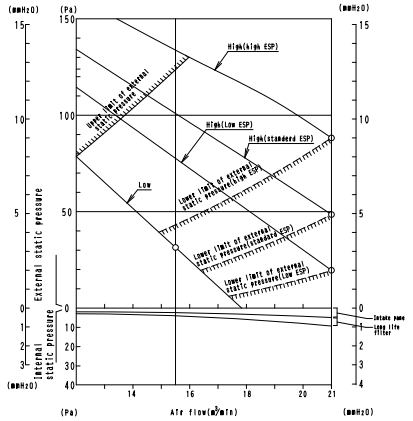

C : 3D036963-5

FXSQ80M

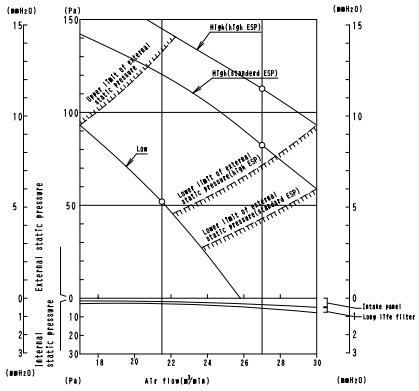

C : 3D036964-5

FXSQ100M

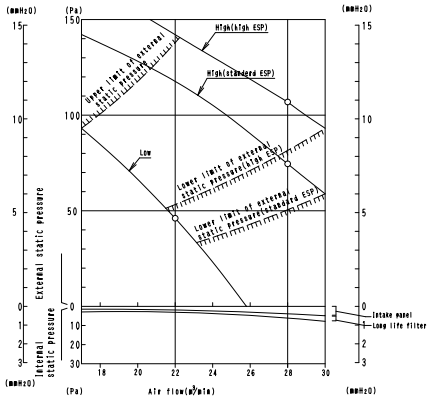

C : 3D036965-5

FXSQ125M

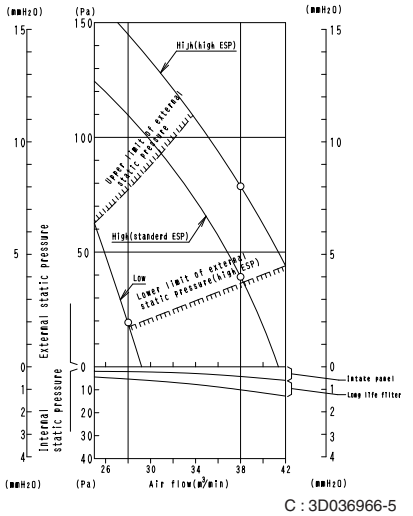

C : 3D036966-5

Note:

1. The remote controller can be used to switch between “high” and “low”.
2. The air flow is set to “standard” before leaving the factory. It is possible to switch between “standard ESP” and “high ESP” by changing the terminals in the indoor unit electrical box.
3. The external static pressure indicates the characteristics of the fan when a suction panel (optional accessory) and a canvas for the suction panel (optional accessory) are incorporated into the main unit (with a long-life filter).

8.2 60Hz

FXSQ20 · 25M

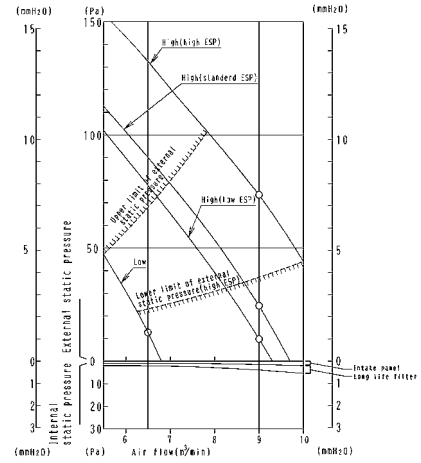

C : 3D036959-6

FXSQ32M

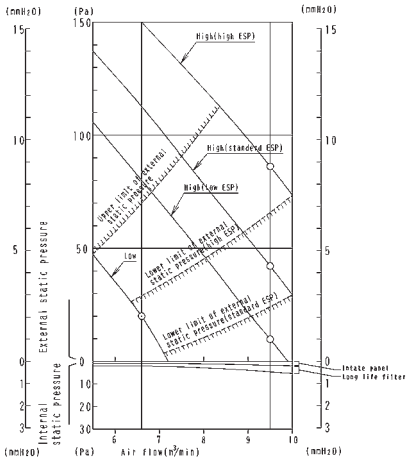

C : 3D036960-6

FXSQ40M

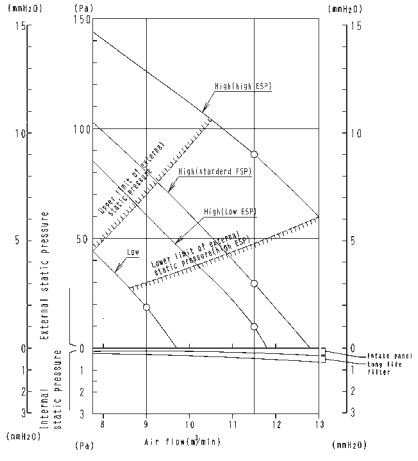

C : 3D036961-6

FXSQ50M

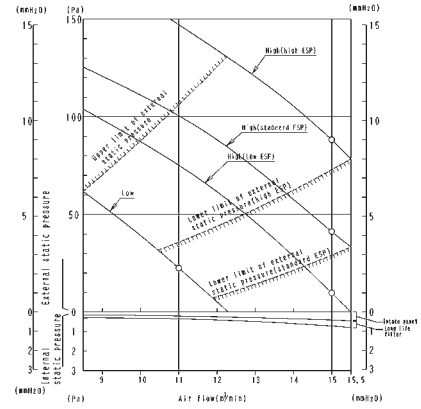

C : 3D036962-6

FXSQ63M

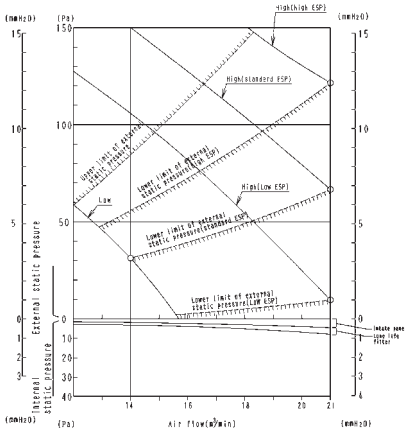

C : 3D036963-6

FXSQ80M

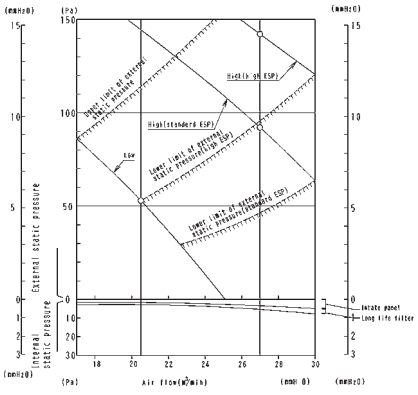

C : 3D036964-6

FXSQ100M

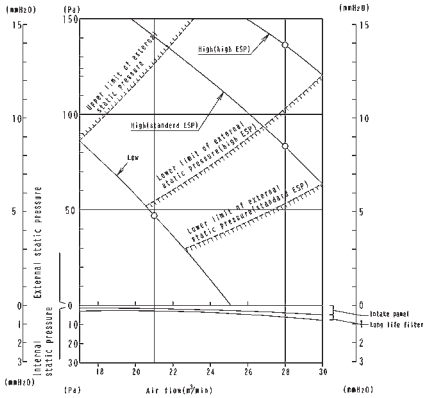

C : 3D036965-6

FXSQ125M

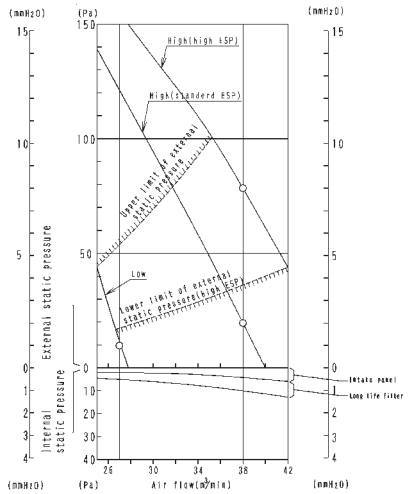

C : 3D036966-6

Note:

1. The remote controller can be used to switch between “high” and “low”.
2. The air flow is set to “standard” before leaving the factory. It is possible to switch between “standard ESP” and “high ESP” by changing the terminals in the indoor unit electrical box.
3. The external static pressure indicates the characteristics of the fan when a suction panel (optional accessory) and a canvas for the suction panel (optional accessory) are incorporated into the main unit (with a long-life filter).

9. Air Velocity and Temperature Distributions (Reference Data)

FXSQ63M

(Heating · Air Velocity Distribution)
In case of 9 m³/min Air Flow

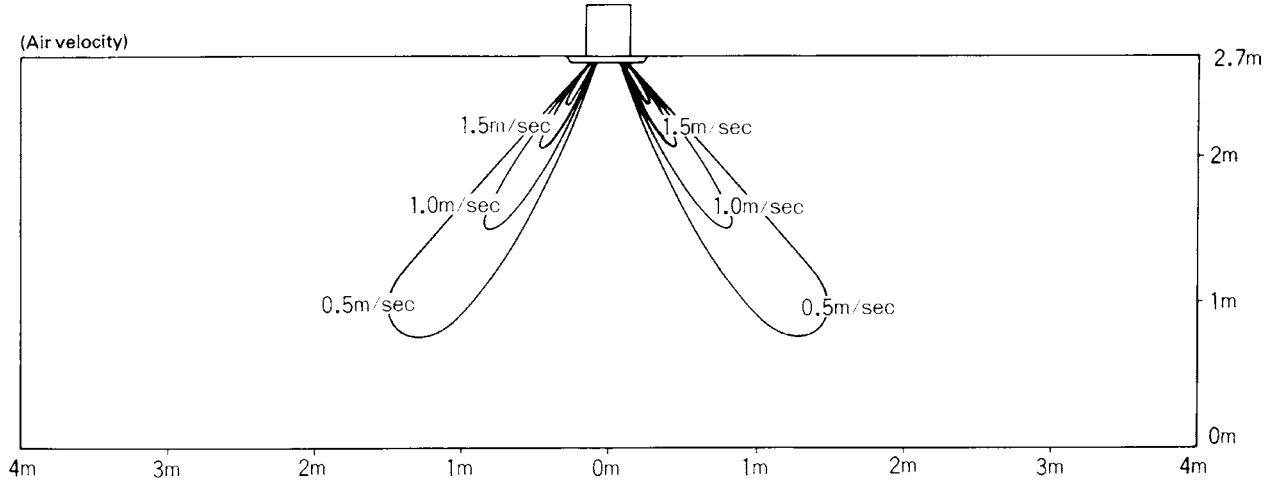

(V0462)

FXSQ63M

(Heating · Temperature Distribution)
In case of 9 m³/min Air Flow

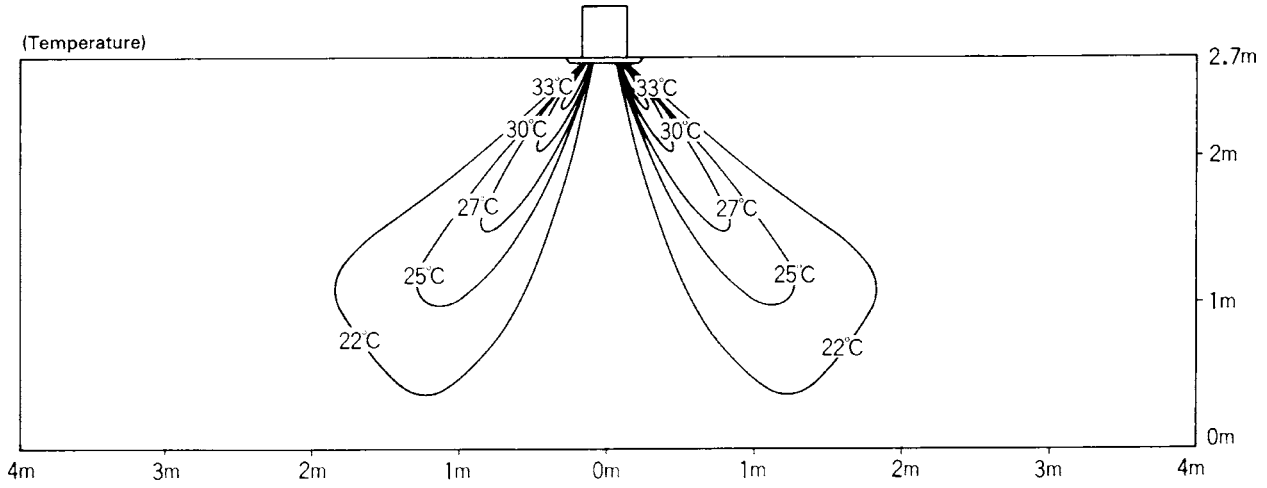

(V0463)

FXSQ125M

(Heating · Air Velocity Distribution)
In case of 9 m³/min Air Flow

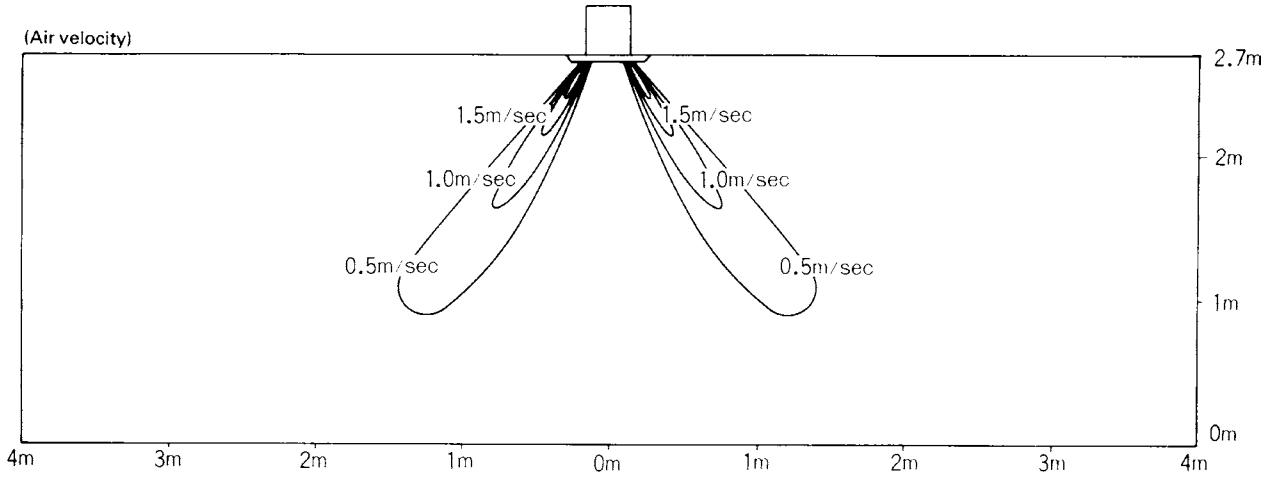

(V0464)

FXSQ125M

(Heating · Temperature Distribution)
In case of 9 m³/min Air Flow

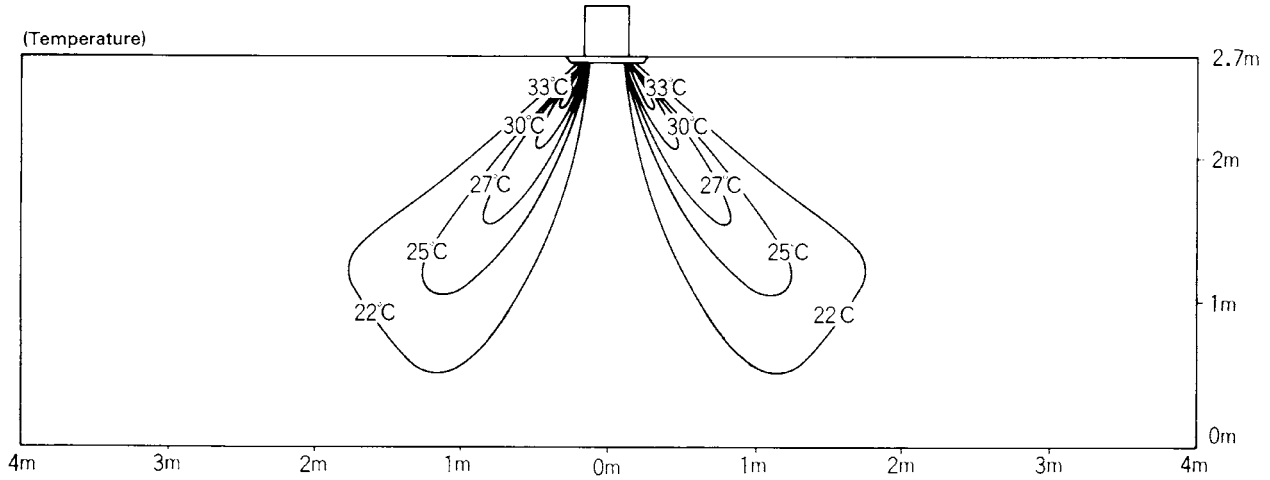

(V0465)

10. Sound Levels

Overall

■ **Ceiling Mounted Built-In Type**

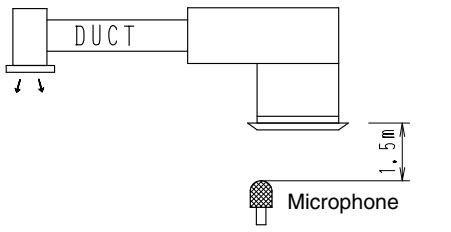

Note:
1. The operating conditions are assumed to be standard (JIS conditions).
2. These operating values were obtained in a dead room (conversion values).
   Sound level will vary depending on a range of factors such as the construction (acoustic absorption coefficient) of the particular room in which the equipments installed.

dBA

Model	220V, 50/60Hz		240V, 50Hz	
	H	L	H	L
FXSQ20M FXSQ25M	37	32	39	34
FXSQ32M FXSQ40M	38	32	40	34
FXSQ50M	41	36	43	38
FXSQ63M	42	35	44	37
FXSQ80M FXSQ100M	43	37	45	39
FXSQ125M	46	41	48	43

6

Octave Band Level

○———○ 220V 50/60Hz
○ - - - -○ 240V 50Hz

FXSQ20 · 25MVE

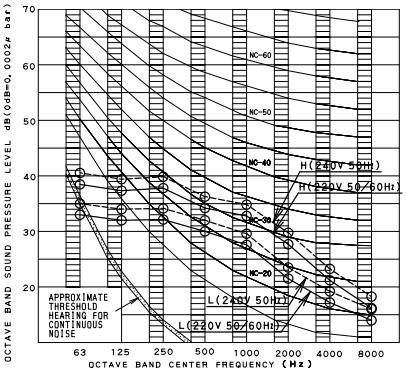

4D036937

FXSQ32MVE

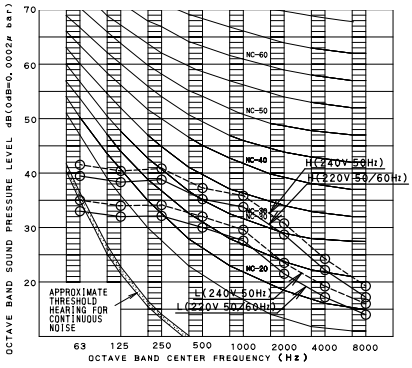

4D036938

FXSQ40MVE

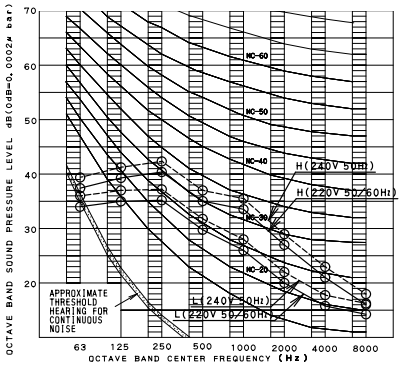

4D036939

FXSQ50MVE

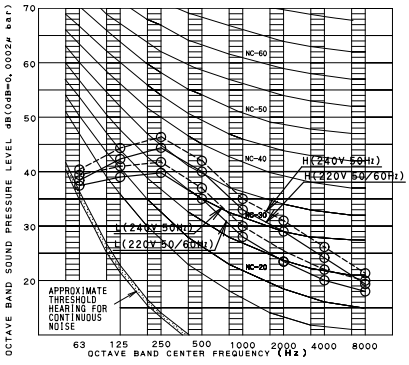

4D036940

FXSQ63MVE

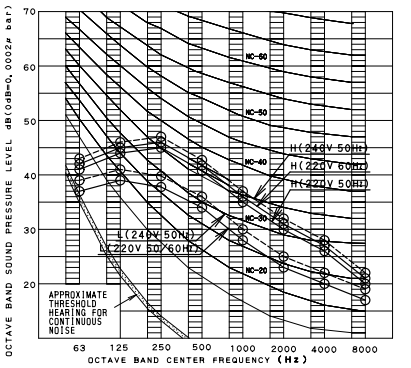

4D036941

FXSQ80MVE

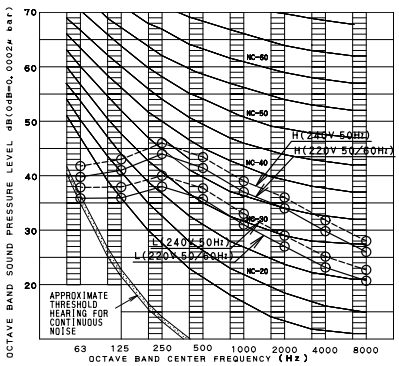

4D036942

FXSQ100MVE

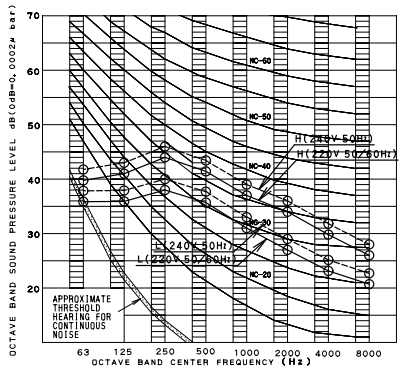

4D036943

FXSQ125MVE

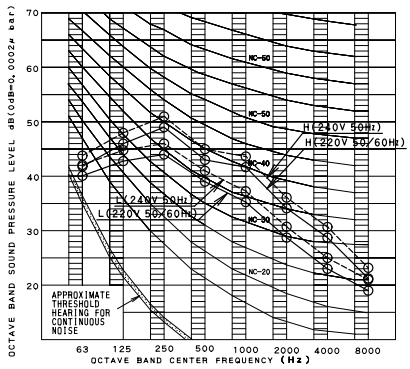

4D036944

11. Installation

Center of Gravity

Unit (mm)

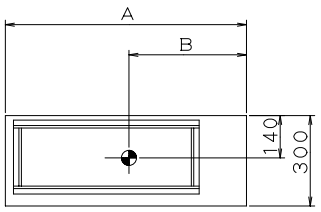

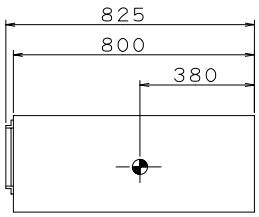

MODEL	A	B
FXSQ20・25・32MVE	550	250
FXSQ40・50MVE	700	300
FXSQ63MVE	1000	460
FXSQ80・100・125MVE	1400	640

C : 4D036946D

6

Service Space

Unit (mm)

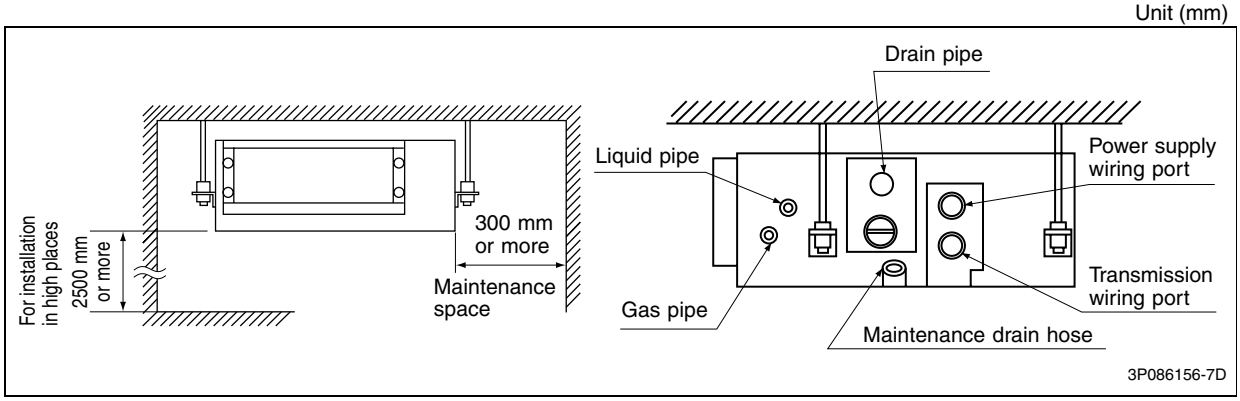

Note:
Above figure means minimum value. Please keep these value at least.

Bolt Pitch

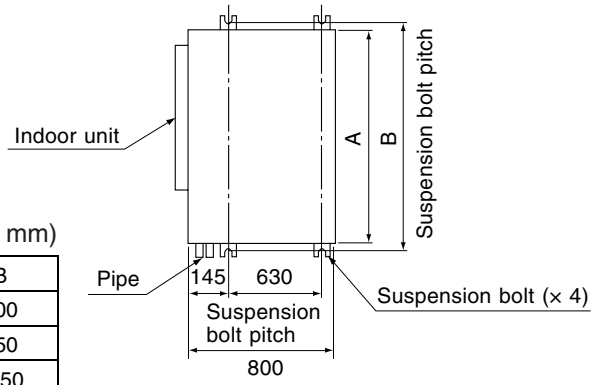

(Unit : mm)

Model	A	B
FXSQ20 · 25 · 32MVE	550	600
FXSQ40 · 50MVE	700	750
FXSQ63MVE	1000	1050
FXSQ80 · 100 · 125MVE	1400	1450

・ For standard installation (air inlet on the bottom side), choose one of the below two means of installation.

Note: For other than standard installation, contact your Daikin dealer for details.

Drain Pump Kit

Indoor unit	Drain pump kit
FXSQ-M	Standard (Equipped with indoor unit)

Drain Piping Work

<<Rig the drain pipe as shown below and take measures against condensation. Improperly rigged piping could lead to leaks and eventually wet furniture and belongings.>>

(1) Carry out the drain piping

- The diameter of the drain pipe should be greater than or equal to the diameter of the connecting pipe (vinyl tube ; pipe size : 25 mm ; outer dimension : 32 mm).
- Keep the drain pipe short and sloping downwards at a gradient of at least 1 / 100 to prevent air pockets from forming.
- If the drain hose cannot be sufficiently set on a slope, execute the drain raising piping.
- To keep the drain hose from sagging, space hanging wires every 1 to 1.5 m.



⚠ CAUTION

Setting the unit at an angle opposite to the drain piping might cause leaks.

- Use the drain hose and the metal clamp. Tighten the clamp firmly. Insert the drain hose into the drain socket, up to the tape. Tighten the clamp until the screw head is less than 4 mm from the hose.
- Wrap the sealing pad over the metal clamp and drain hose to insulate.
- Insulate the drain hose inside the building.

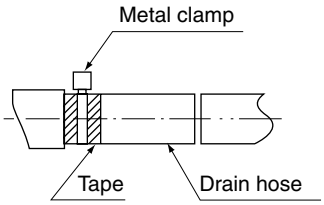

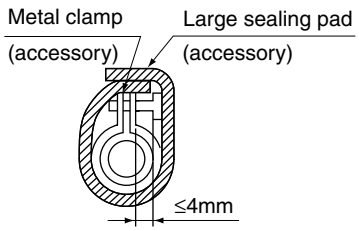

〈 PRECAUTIONS FOR DRAIN RAISING PIPING 〉

〈HOW TO INSTALL PIPING〉

(1) Connect the drain hose to the drain raising pipes, and insulate them.
(2) Connect the drain hose to the drain outlet on the indoor unit, and tighten it with the metal clamp.
(3) Insulate both metal clamp and drain hose with the sealing pad.

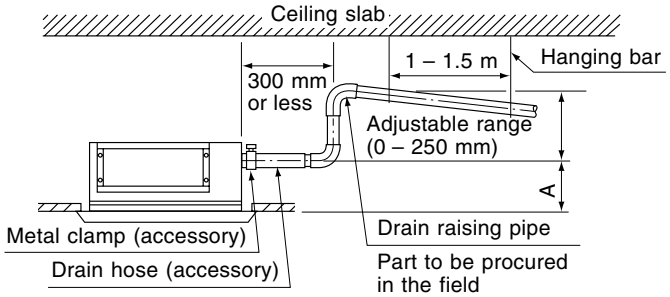

	A (mm)
When canvas duct is installed	350 – 530
When air inlet panel is directly installed	275

- If converging multiple drain pipes, install according to the procedure shown below.

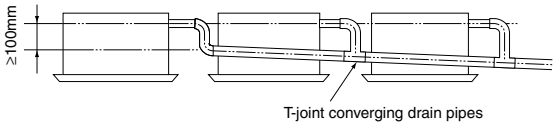

Select converging drain pipes whose gauge is suitable for the operating capacity of the unit.

⚠ CAUTION

- Drain piping connections
  Do not connect the drain piping directly to sewage pipes that smell of ammonia. The ammonia in the sewage might enter the indoor unit through the drain pipes and corrode the heat exchanger.
- Keep in mind that it will become the cause of getting drain pipe blocked if water collects on drain pipe.

3P086156-7D

(2) After piping work is finished, check drainage flows smoothly.

- Open the water inlet lid, add approximately 1 liter of water gradually and check drainage flow.

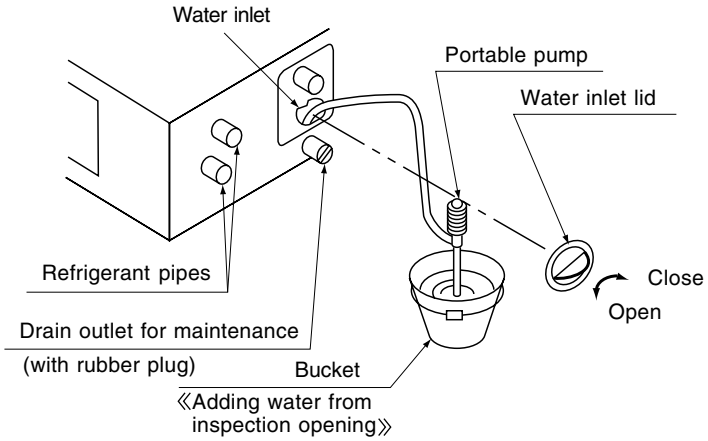

Note: Use this outlet to drain water from the drain pan.

[WHEN ELECTRIC WIRING WORK IS FINISHED]

- Check drainage flow during COOL running, explained under “TEST OPERATION.”

[WHEN ELECTRIC WIRING WORK IS NOT FINISHED]

- Remove the electric parts box lid, connect a power supply and remote controller to the terminals.
  (Refer to the “HOW TO CONNECT WIRINGS”)
  Be sure attach the electric parts box lid before turning on the power.
  Next, press the inspection / test operation button “ TEST ” on the remote controller. The unit will engage the test operation mode.
  Press the operation mode selector button “ ” until selecting FAN OPERATION “ ”. Then, press the ON/OFF button “ ”. The indoor unit fan and drain pump will start up. Check that the water has drained from the unit. Press “ TEST ” to go back to the first mode.

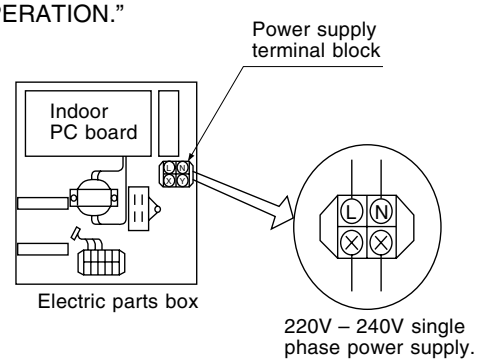

- You can check whether drainage is satisfactory or not by removing the access opening lid and checking the water level of the drain pan through the access opening.
- **Be careful when doing so because the fan is turning at the same time.**

3P086156-7D

12. Accessories

Standard Accessories

FXSQ20~125M

Name	Metal clamp	Paper pattern for installation	Drain hose	Insulation for fitting	Sealing pad	Screws for duct flanges
Quantity	1 pc.	1 pc.	1 pc.	1 each.	1 each.	1 set
Shape		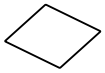		 for gas pipe for liquid pipe	 Large  mid	 FXSQ20 · 25 · 32MVE: 6 FXSQ40 · 50MVE: 8 FXSQ63MVE: 12 FXSQ80 · 100 · 125MVE: 16

Name	Washer for hanging bracket	Clamp	Screws for fixing the paper pattern for installation	(Other) • Operation manual • Installation manual • Sealing material (Small 35×150)
Quantity	8 pcs.	6 pcs.	6 pcs.	
Shape				

• Screws for fixing panels are attached to decoration panel.

3P086156-7D

Optional Accessories (For Unit)

No.	Item	Type		FXSQ20M FXSQ25M FXSQ32M	FXSQ40M FXSQ50M	FXSQ63M	FXSQ80M FXSQ100M	FXSQ125M
1	Panel related	Decoration panel		BYBS32DJW1	BYBS45DJW1	BYBS71DJW1	BYBS125DJW1	
		Access panel		KTBJ25K36W	KTBJ25K56W	KTBJ25K80W	KTBJ25K160W	
2	∗1 Auxiliary electric heater	Model	240V/220V	KEA25K32VE	KEA25K50VE	KEA25K63VE	KEA25K100VE	KEA25K125VE
		Capacity	kW	0.75	1.2	1.4	2.1	2.8
3	Filter related	∗2 High efficiency filter 65%		KAFJ252L36	KAFJ252L56	KAFJ252L80	KAFJ252L160	
		∗2 High efficiency filter 90%		KAFJ253L36	KAFJ253L56	KAFJ253L80	KAFJ253L160	
		Long life replacement filter		KAFJ251K36	KAFJ251K56	KAFJ251K80	KAFJ251K160	
		Filter chamber	For bottom suction	KAJ25L36D	KAJ25L56D	KAJ25L80D	KAJ25L160D	
			For rear suction	KAJ25L36B	KAJ25L56B	KAJ25L80B	KAJ25L160B	
4	Air inlet and air discharge outlet related	Air suction canvas		KSA-25K36	KSA-25K56	KSA-25K80	KSA-25K160	
		Screening door		KBBJ25K36	KBBJ25K56	KBBJ25K80	KBBJ25K160	
		Air suction flange		KDJ2507K36	KDJ2507K56	KDJ2507K80	KDJ2507K160	
		Air discharge adaptor		KDAJ25K36	KDAJ25K56	KDAJ25K71	KDAJ25K140	
5	Natural evaporating pan type humidifier ∗1			KNM25K32V1	KNM25K50V1	KNM25K63V1	KNM25K125V1	

Note:

∗1 One adaptor for wiring (KRP1B61) per indoor unit is required if installing an electric heater or a natural evaporating pan type humidifier. An electric heater cannot be used for VRV system cooling only.

∗2 If installing a high filter in the ceiling mounted built-in type, an assembly chamber for either bottom or rear suction is required.

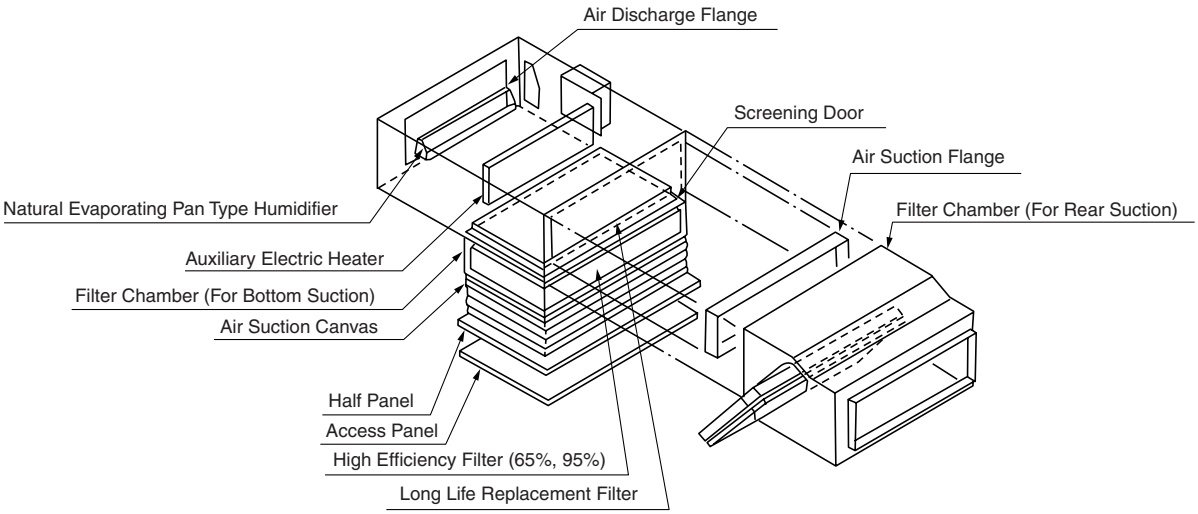

Optional Accessories (For Controls) : Refer to P.375

Access Panel

Specifications

Item \ Model	KTBJ25K36W	KTBJ25K56W	KTBJ25K80W	KTBJ25K160W
Color	White			
Applicable Model	20~32 Class	40 · 50 Class	63 Class	80~125 Class

Dimension

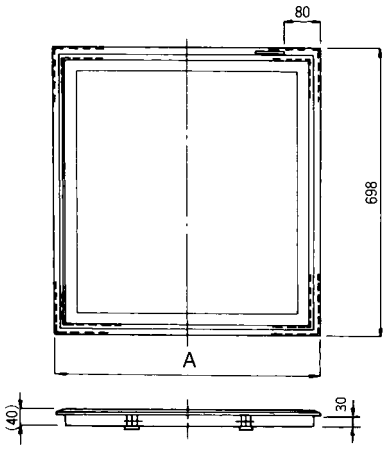

Model	A
KTBJ25K36W	626
KTBJ25K56W	776
KTBJ25K80W	1076
KTBJ25K160W	1476

Installation

[Before installation]

1. Make an opening on the ceiling

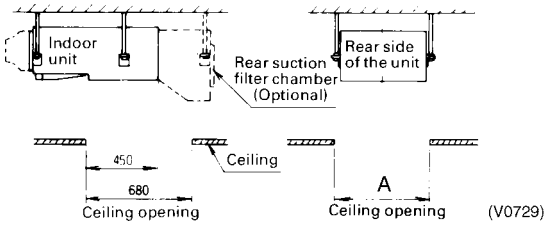

2. Install ceiling joist supports to fit the ceiling opening

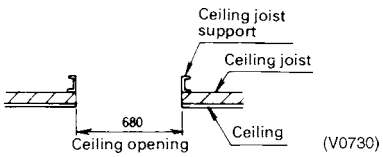

Model	A
KTBJ25K36	606
KTBJ25K56	756
KTBJ25K80	1056
KTBJ25K160	1406

[Installation of the ceiling board]

The ceiling board can be installed into the inner frame assembly as follows.

1. Remove decoration panel retainer from the inner frame assembly.
2. Remove the decoration panel and substitute with the ceiling board.
3. Set the ceiling board by retainer removed in step 1 of above.

⚠ CAUTION

When the ceiling board is installed, the decoration panel is not needed.

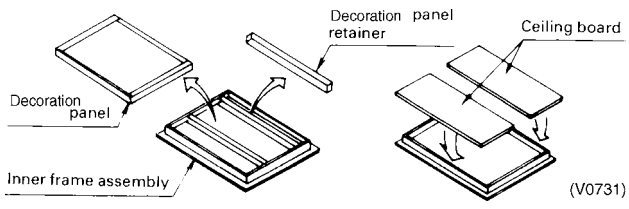

Auxiliary Electric Heater (A wiring adaptor is needed)

Specifications

Items \ Model	KEA25K32VE	KEA25K50VE	KEA25K63VE	KEA25K100VE	KEA25K125VE
Heater Capacity (kW)	0.75	1.2	1.4	2.1	2.8
Power Supply	Single Phase, 220-240V/220V 50/60Hz				
Applicable Models	20 · 25 · 32 Class	40 · 50 Class	63 Class	80 · 100 Class	125 Class

Installation

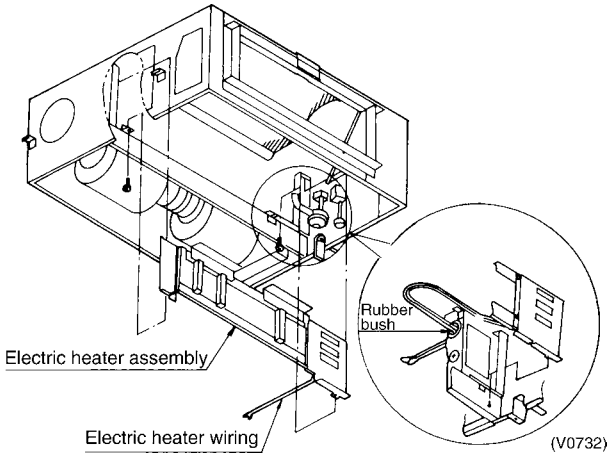

Characteristics of filter

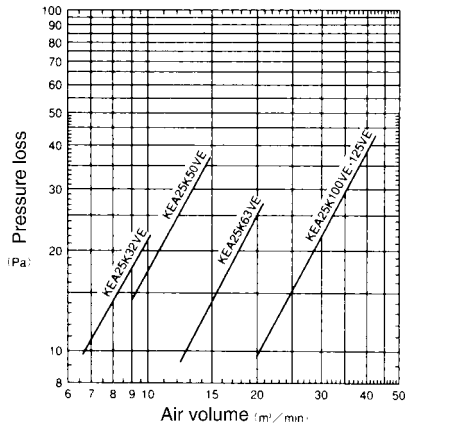

Wiring

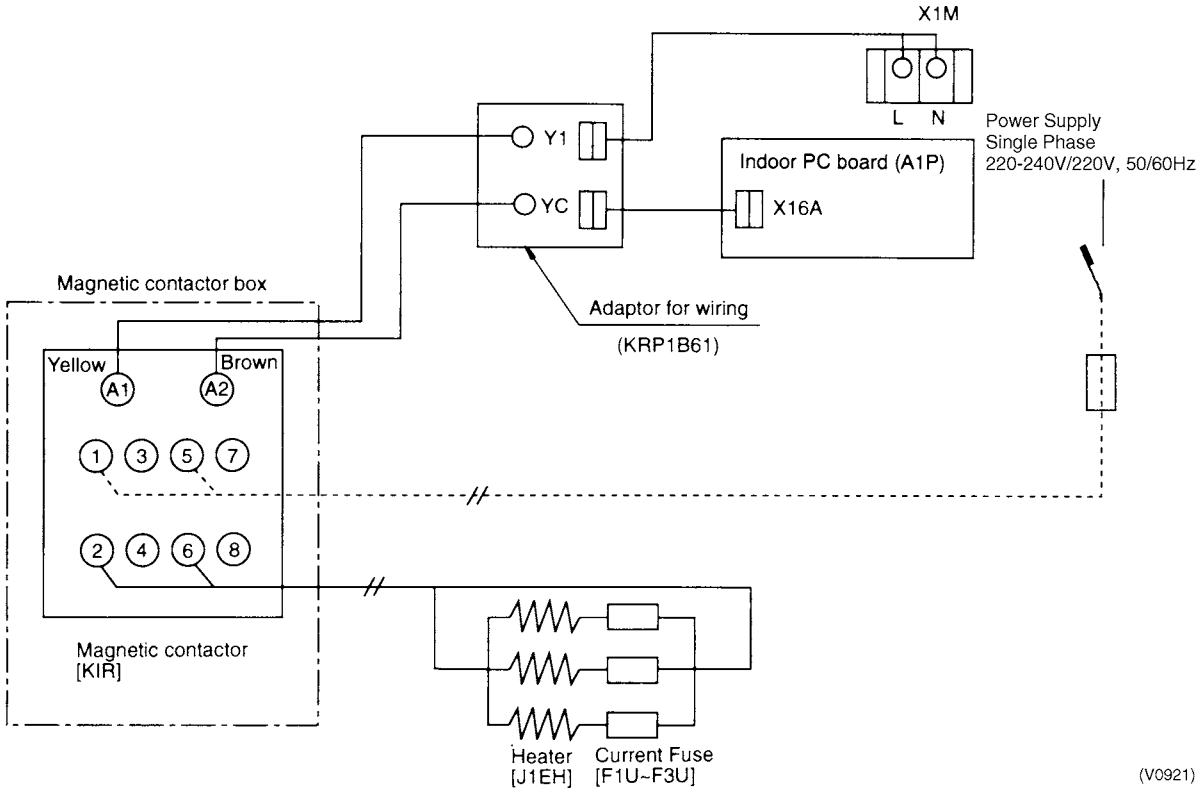

Precaution at use

1. When the aux. electric heater will be installed, “Wiring adaptor (KRP1B61)” is separately needed for one indoor unit by one piece of the adaptor.

Natural Evaporating Pan Type Humidifier (Wiring adaptor is required.)

Specifications

Item \ Model	KNM25K32V1	KNM25K50V1	KNM25K63V1	KNM25K125V1
Humidifying Capacity (L/h)	0.4	0.6	1.0	1.8
Power Supply (W)	Single Phase, 220-240V 50Hz			
Power Consumption	12/9.6			
Water Inlet Port	1/2B			
Water Outlet Port	VP25 (External dia. ϕ32) (drain pipe at indoor unit)			
Applicable Models	20 · 25 · 32 Class	40 · 50 Class	63 Class	80 · 100 · 125 Class

Precaution at use

1. "Wiring adaptor (KRP1B61)" is separately needed for one indoor unit by one piece of the adaptor.
2. This humidifier will be built in a indoor unit, while the solenoid valve box will be mounted out of the unit's body (refer to the dimensions of optional accessories).
3. The field setting should be changed by a remote controller.

Note:
The value in JIS heating condition's standard.

Feed water piping

1. Provide a stop valve of feed water for the feed water circuit.
2. Supply clean water for the feed water. Contaminated water clogs a valve and the contaminants accumulate in a water tank, disturbing a normal operation of the humidifier. (Never use cooling water for a cooling tower or hot water for heating purpose). Moreover, since white powder will appear if the feed water contains much silica, it is recommended to install a water purifier or a water softener if these phenomena are found.
3. Use water in the range of water temperature 5 ~ 50°C and water pressure 0.049 ~ 0.294 MPa[0.5 ~3kg/cm²]. Provide a reducing valve between a strainer and this kit, in case of 0.294MPa or more for feed water pressure.
4. The feed water pipe can not be connected to a public water route. Accordingly, if water must be supplied through a public water by all means, provide a cistern tank (approved model only).

Wiring diagram

---------- Field wiring
Make wiring as shown on the right, if a humidity controller will be mounted.
Arrange the wiring shown right locally for that case. Set the turn-over switch to OFF for the choice of ON/OFF of group humidity controlling input on the "Wiring adaptor PC board" .

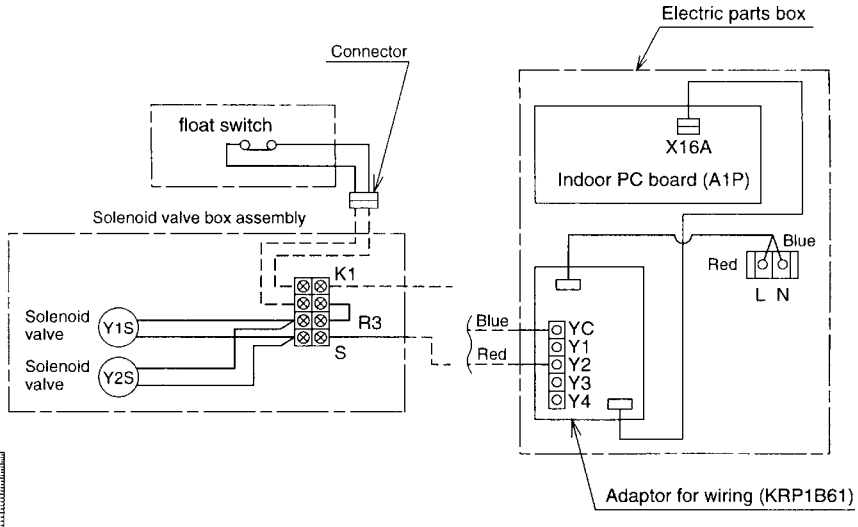

Characteristics of Filter

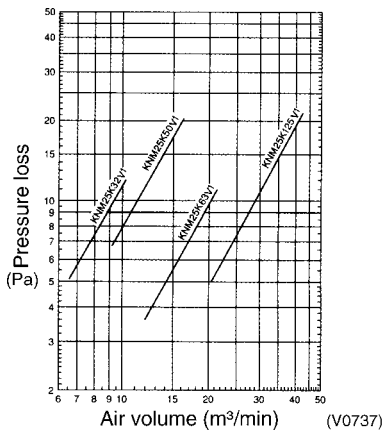

High Efficiency Filter

Specifications

Items \ Model	KAFJ252L36	KAFJ252L56	KAFJ252L80	KAFJ252L160	KAFJ253L36	KAFJ253L56	KAFJ253L80	KAFJ253L160
Dust Collection Efficiency (%)	Colorimetric method 65%				Colorimetric method 90%			
Initial Pressure Loss (Pa)	12 or less	14 or less		22 or less	21 or less	24 or less		34 or less
Final Pressure Loss (Pa)	98 or less				98 or less			
Filter	Non-woven fabric of synthetic fiber				Non-woven fabric of synthetic fiber			
Life Time (h)	2,500 hours (Dust density 0.15mg/m³)				1,800 hours (Dust density 0.15mg/m³)			
High Efficiency Filter Chamber (for the Bottom Suction)	KAJ25L36D	KAJ25L56D	KAJ25L80D	KAJ25L160D	KAJ25L36D	KAJ25L56D	KAJ25L80D	KAJ25L160D
High Efficiency Filter Chamber (for the Rear Suction)	KAJ25L36B	KAJ25L56B	KAJ25L80B	KAJ25L160B	KAJ25L36B	KAJ25L56B	KAJ25L80B	KAJ25L160B
External Dimension (mm) (T×W×D)	25×500×360	25×650×360	(25×475×360)×2	(25×700×360)×1 (25×650×360)×1	25×500×360	25×650×360	(25×475×360)×2	(25×700×360)×1 (25×650×360)×1
Applicable Models	20 · 25 · 32 Class	40 · 50 Class	63 Class	80 · 100 · 125 Class	20 · 25 · 32 Class	40 · 50 Class	63 Class	80 · 100 · 125 Class

Installation

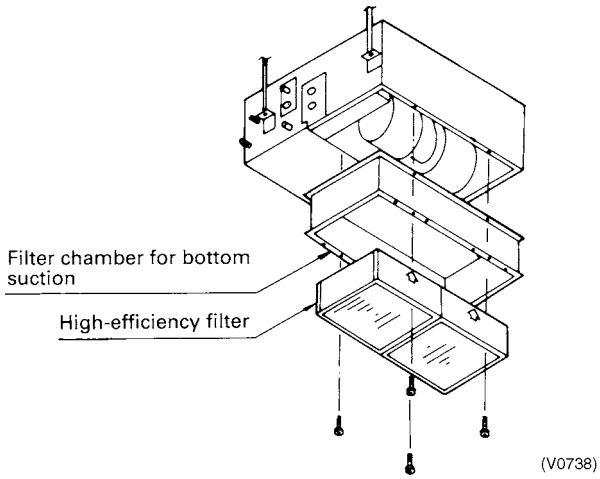

Characteristics of Filter

■ 65% type

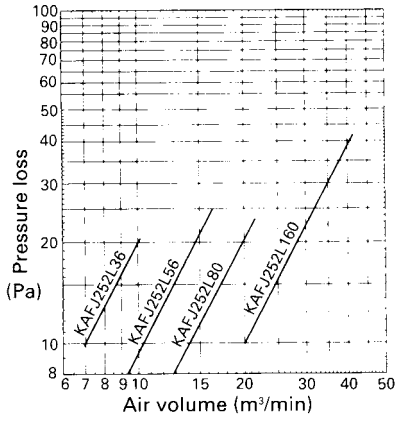

■ 90% type

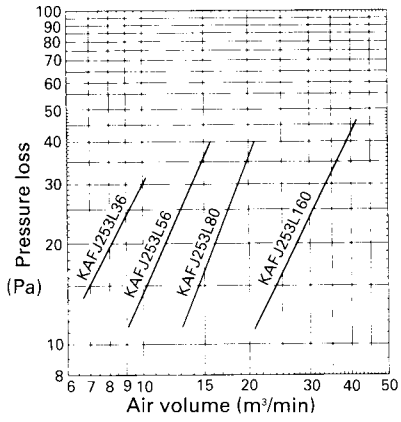

Long-Life Replacement Filter

Specifications

Item \ Model		KAFJ251K36	KAFJ251K56	KAFJ251K80	KAFJ251K160
Average Efficiency (%)		50% (Gravity method)			
Pressure Loss (Pa)	Initial	10 or less		4.9 or less	
	Final	49		49 or less	
Materials		Mildew Proof Resin Net			
Number Required per Model		1	1	2	2
Life Time (h)		2,500 hours (dust particle concentration at 0.15 mg/m³)			
Applicable Model		20 · 25 · 32 Class	40 · 50 Class	63 Class	80 · 100 · 125 Class

Note:
The filter models for 20 ~ 50 Class can be used also as Rear-suction types.

Characteristics of Filter

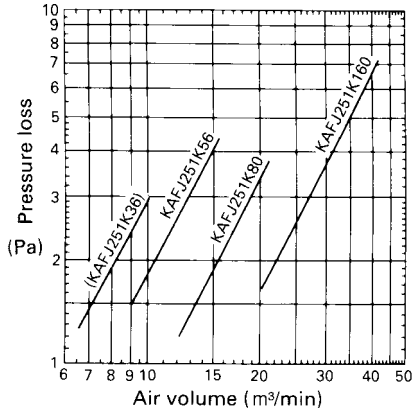

(V0741)

Canvas Duct (Air Suction Canvas)

Specifications

Item \ Model		KSA-25K36	KSA-25K56	KSA-25K80	KSA-25K160
Dimensions (mm)	H	255	255	255	255
	W	550	700	1000	1400
	D	405	405	405	405
Canvas Duct		TOYOBO · SL1000 · SIMVER Flame resistant			
Applicable Model		BYBS32DJW1	BYBS45DJW1	BYBS71DJW1	BYBS125DJW1

Installation

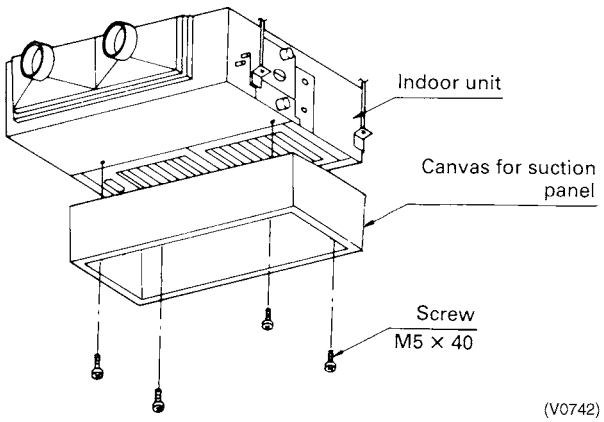

(V0742)

Suction Panel

Characteristics of Filter

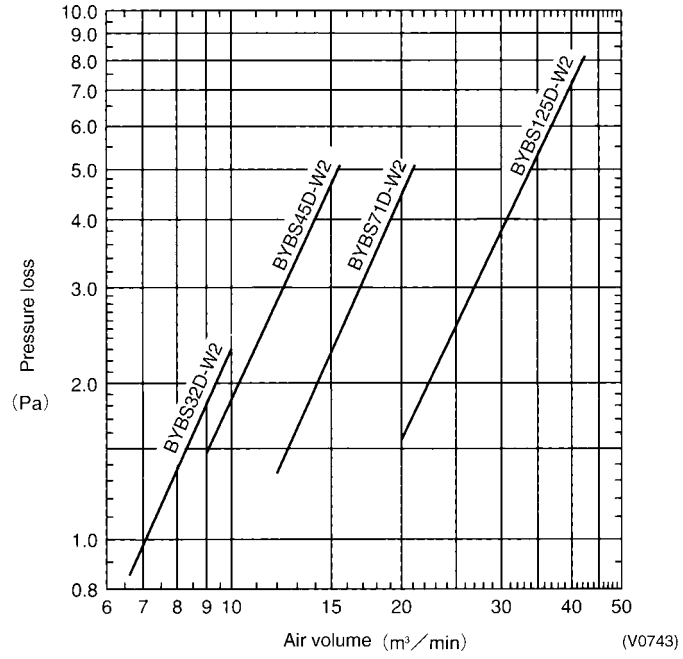

Air Discharge Adaptor

Specifications

Item \ Model	KDAJ25K36	KDAJ25K56	KDAJ25K71	KDAJ25K140
Connection Dia. (ϕmm)	ϕ200×1 port	ϕ200×2 port	ϕ200×2 port	ϕ200×4 port
Applicable Models	20 · 25 · 32 Class	40 · 50 Class	63 Class	80 · 100 · 125 Class

Filter Chamber (for Rear-suction Type)

This kit will be used for the rear-suction type when the high efficiency filter or the long life filter will be built in.

Applicable Model

Model	Applicable Model
KAJ25L36B	20 · 25 · 32 Class
KAJ25L56B	40 · 50 Class
KAJ25L80B	63 Class
KAJ25L160B	80 · 100 · 125 Class

Installation

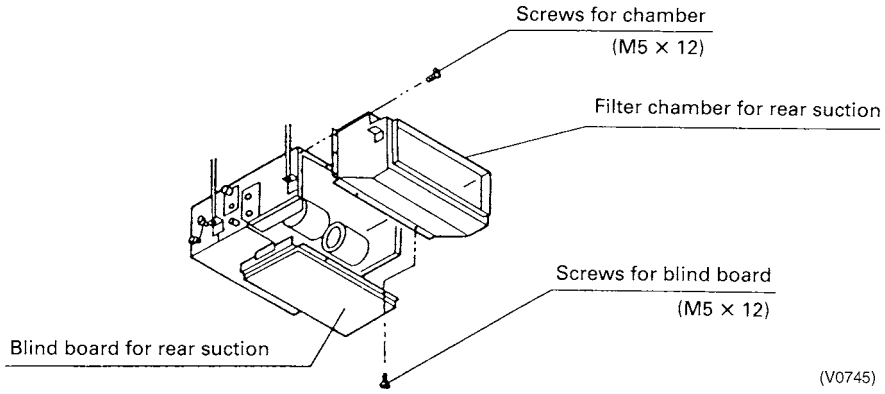

Be sure to remove the long life filter and attach the rear-suction type's sealing plate there when the filter chamber (for the rear-suction type) must be installed.

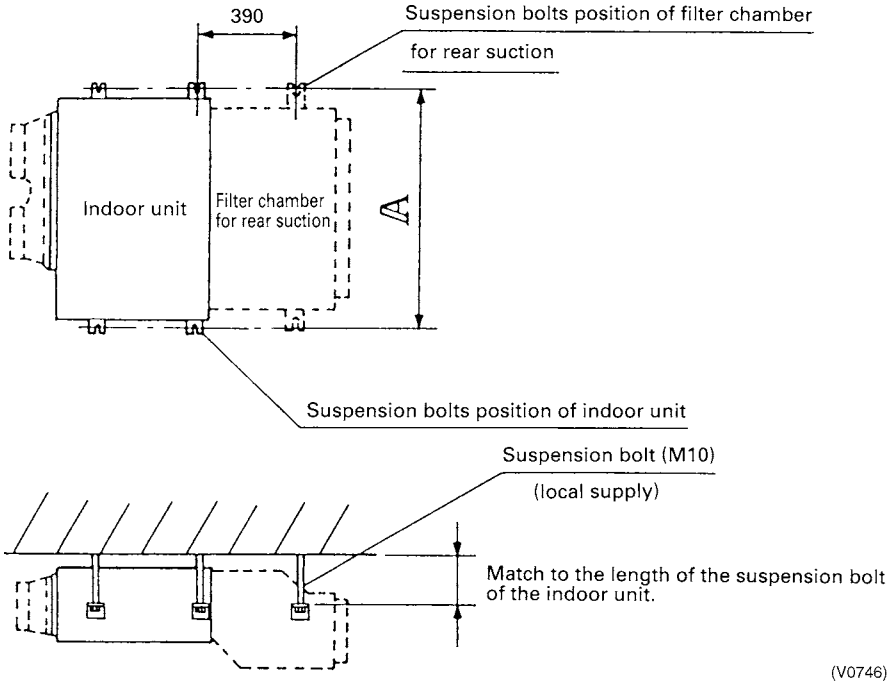

Model	A
KAJ25L36B	600
KAJ25L56B	750
KAJ25L80B	1050
KAJ25L160B	1450

Note:

Refer to the appearance figure of optional accessory describing later for further details.

Filter Chamber for Bottom Suction

Applicable Model

Model	Applicable Model
KAJ25L36D	20 · 25 · 32 Class
KAJ25L56D	40 · 50 Class
KAJ25L80D	63 Class
KAJ25L160D	80 · 100 · 125 Class

Dimension

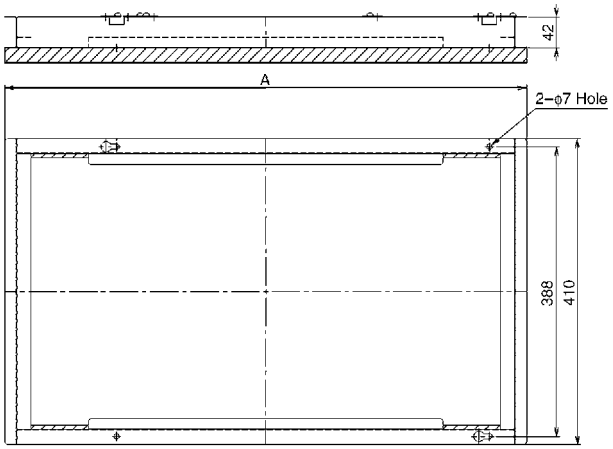

JC : D3K1420A

Model	A
KAJ25L36D	550
KAJ25L56D	700
KAJ25L80D	1000
KAJ25L160D	1400

Installation

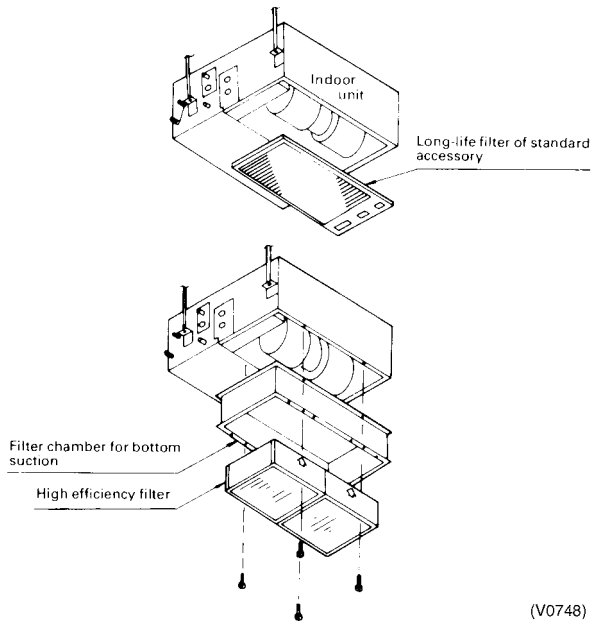

Note:
Refer to the appearance figure of optional accessory describing later for further details.

Air Suction Flange

When this kit will be used, the rear suction type's sealing plate will be required separately.

Specifications

Item	Model	Air Suction Flange			
		KDJ2507K36	KDJ2507K56	KDJ2507K80	KDJ2507K160
Dimensions (mm)	W	527	677	977	1377
	H	278			
	T	25			
Size of Connecting Duct (mm)	W	477	627	927	1327
	L	228			
Materials		Galvanized steel plate			
Applicable Model		20 · 25 · 32 Class	40 · 50 Class	63 Class	80 · 100 · 125 Class

Example of Installation

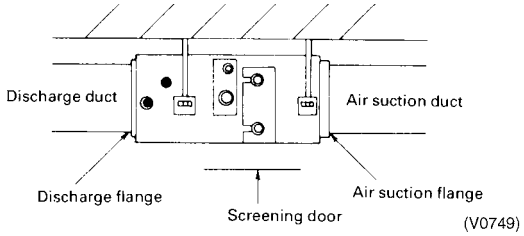

Blind Board (Screening Door) used for the rear-suction type

Specifications

Item	Model	KBBJ25K36	KBBJ25K56	KBBJ25K80	KBBJ25K160
Dimensions (mm)	W	535	685	985	1385
	D	404			
	T	10			
Materials		Galvanized Steel Plate			
Applicable Model		20 · 25 · 32 Class	40 · 50 Class	63 Class	80 · 100 · 125 Class

Dimension

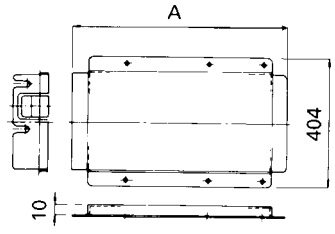

Applicable Model	A
KBBJ25K36	535
KBBJ25K56	685
KBBJ25K80	985
KBBJ25K160	1385

Installation

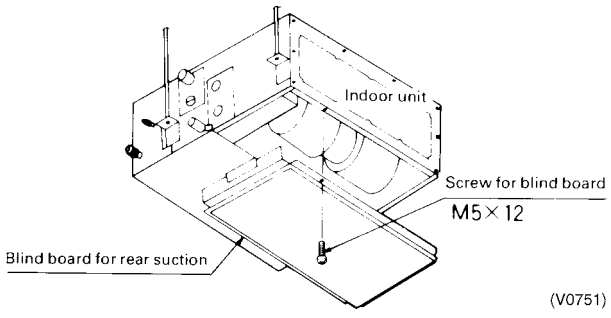

Dimensions with the Optional Accessories

Natural evaporating pan type humidifier (Discharge outlet adaptor)

■ **FXSQ20~32M**

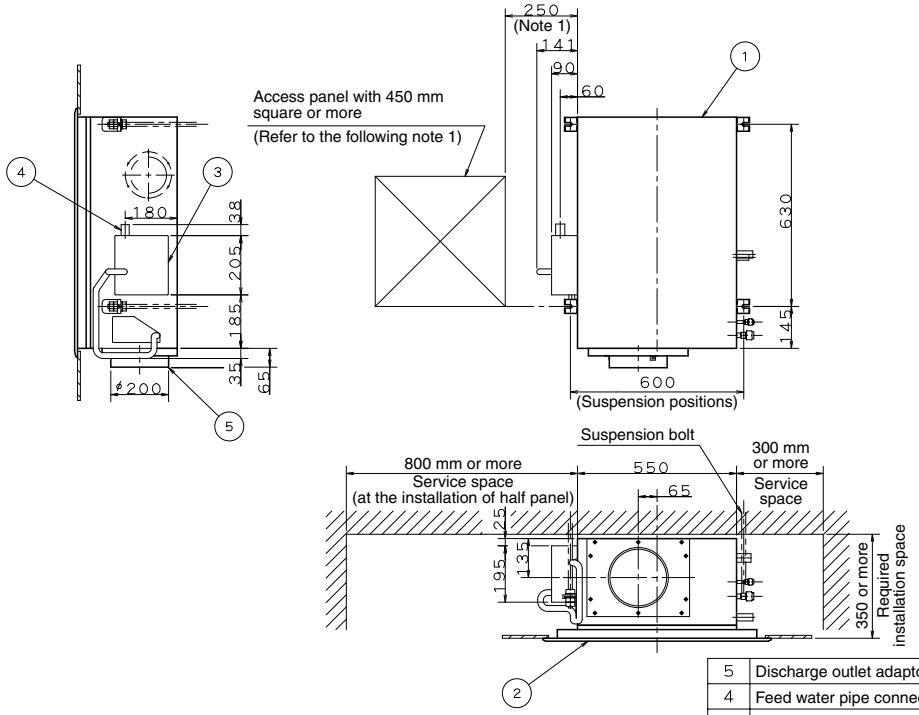

Number	Name	Description
5	Discharge outlet adaptor	
4	Feed water pipe connection	For natural evaporating pan type humidifier PT 1/2
3	Solenoid valve box	For natural evaporating pan type humidifier
2	Suction full panel	
1	Built-in unit body	

Note)
1. An access panel is needed when a half panel will be installed.
2. When optional accessory other than these kits will be built in, refer to external drawing with optional accessories.
3. Parts names ②~⑤ show optional accessories.

JC : DU220-245B

■ **FXSQ40 · 50M**

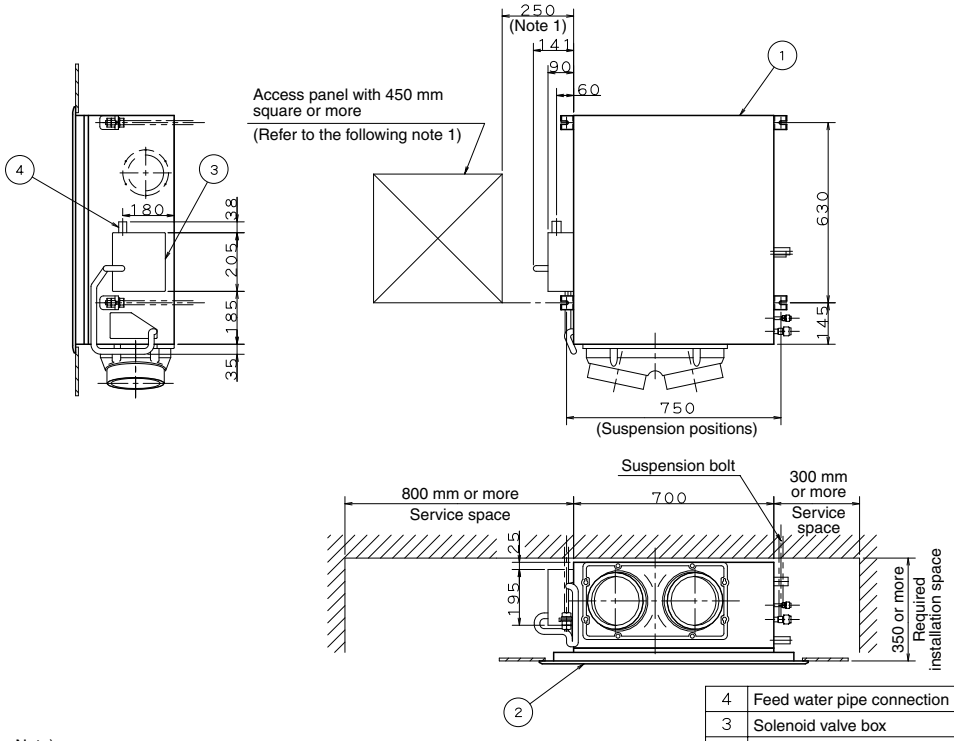

Number	Name	Description
4	Feed water pipe connection	For natural evaporating pan type humidifier PT 1/2
3	Solenoid valve box	For natural evaporating pan type humidifier
2	Suction full panel	
1	Built-in Hi type body	

Note)
1. An access panel is needed when a half panel will be installed.
2. When optional accessory other than these kits will be built in, refer to external drawing with optional accessories.
3. Parts names ②~④ show optional accessories.

JC : DU425-2111E

External drawing with optional accessories (Natural evaporating type humidifier) (Air Discharge Adaptor)

■ FXSQ63M

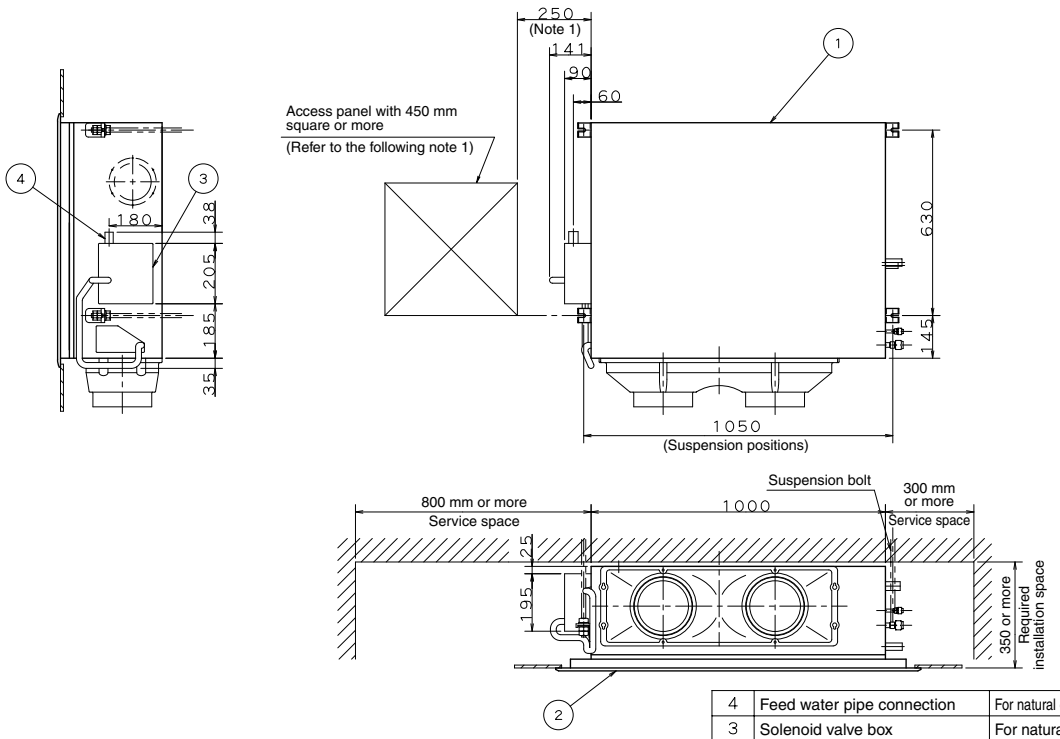

Number	Name	Description
1	Built-in Hi type body	
2	Suction full panel	
3	Solenoid valve box	For natural evaporating pan type humidifier
4	Feed water pipe connection	For natural evaporating pan type humidifier PT 1/2

Note)
1. An access panel is needed when a half panel will be installed.
2. When optional accessory other than these kits will be built in, refer to external drawing with optional accessories.
3. Parts names ②~④ show optional accessories.

JC : DU427-2192F

■ FXSQ80~125M

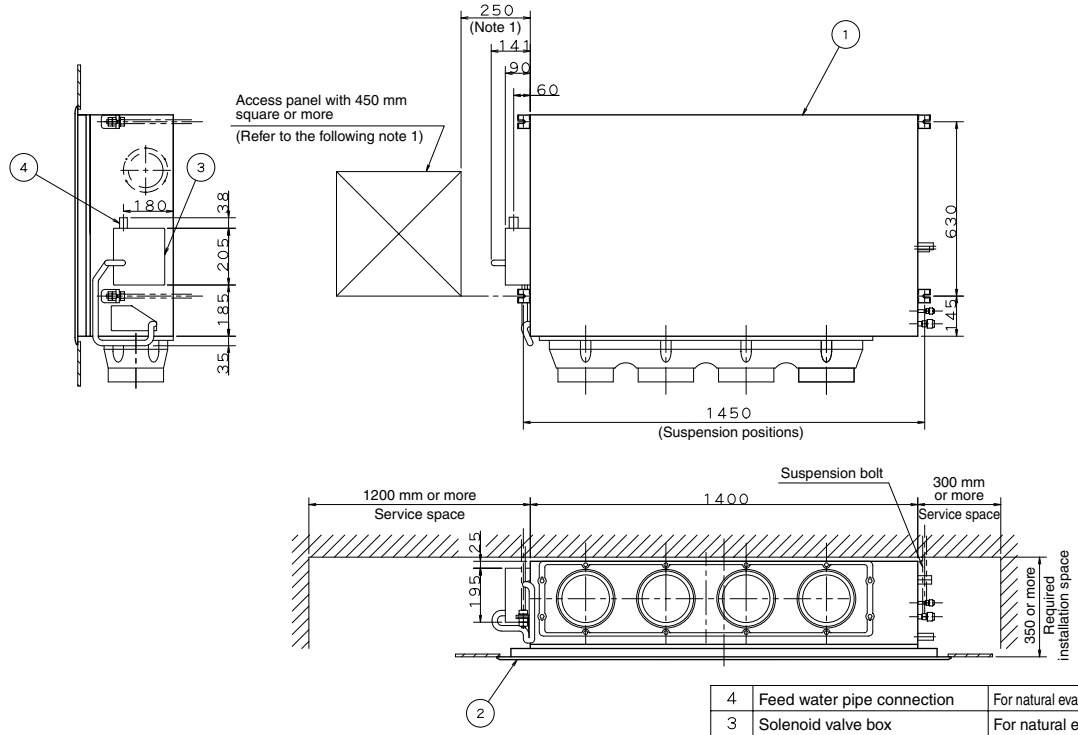

Number	Name	Description
1	Built-in Hi type body	
2	Suction full panel	
3	Solenoid valve box	For natural evaporating pan type humidifier
4	Feed water pipe connection	For natural evaporating pan type humidifier PT 1/2

Note)
1. An access panel is needed when a half panel will be installed.
2. When optional accessory other than these kits will be built in, refer to external drawing with optional accessories.
3. Parts names ②~④ show optional accessories.

JC : DU428-2158F

High Efficiency Filter (Air Discharge Adaptor)

■ FXSQ20~32M

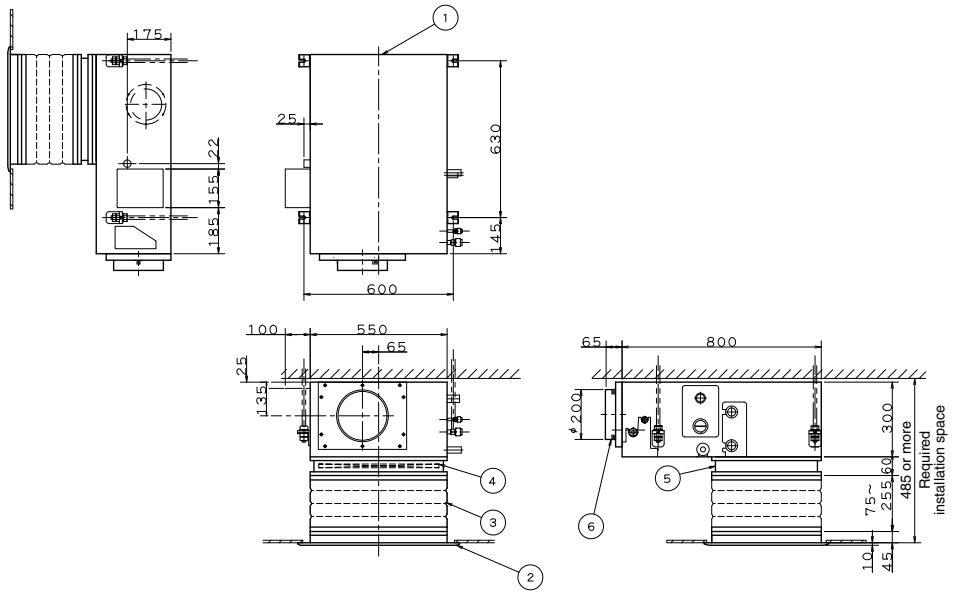

Number	Name	Description
6	Air discharge adaptor	
5	Bottom suction filter chamber	
4	High efficiency filter	
3	Air suction canvas	
2	Suction half panel	
1	Built-in unit body	

Note)
1. When optional accessory other than these kits will be built in, refer to the external drawing with optional accessories.
2. Parts names ②~⑧ show optional accessories.

JC : DU820-238B

■ FXSQ40 · 50M

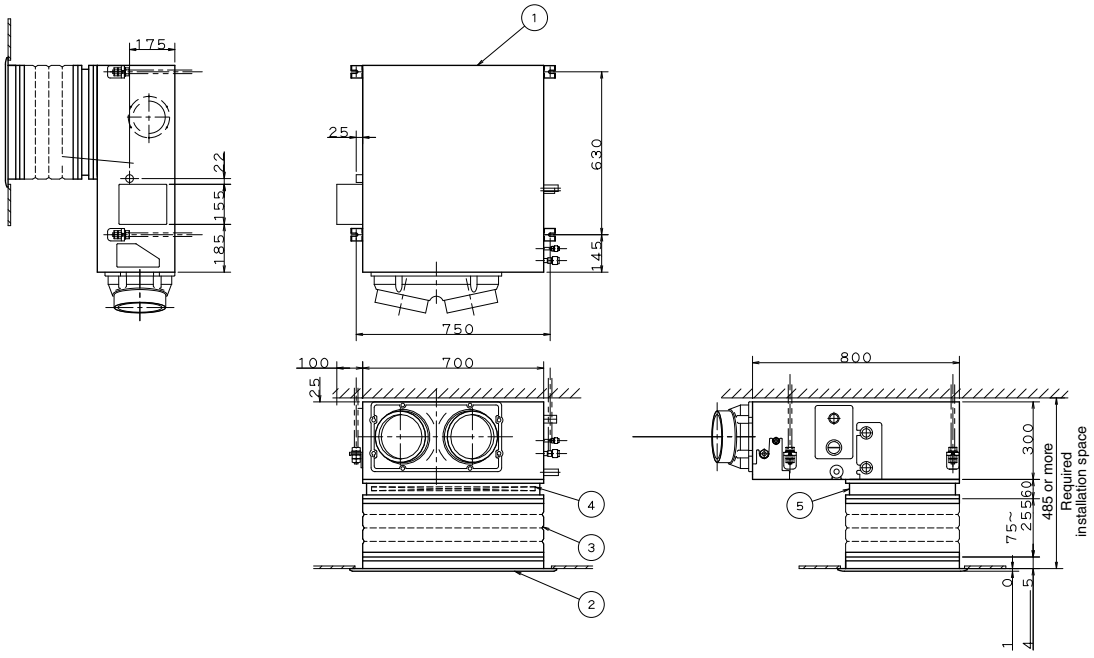

Number	Name	Description
5	Bottom suction filter chamber	
4	High efficiency filter	
3	Air suction canvas	
2	Suction half panel	
1	Built-in Hi type body	

Note)
1. When optional accessory other than these kits will be built in, refer to the external drawing with optional accessories.
2. Parts names ②~⑦ show optional accessories.

JC : DU823-226E

High Efficiency Filter

■ FXSQ63M

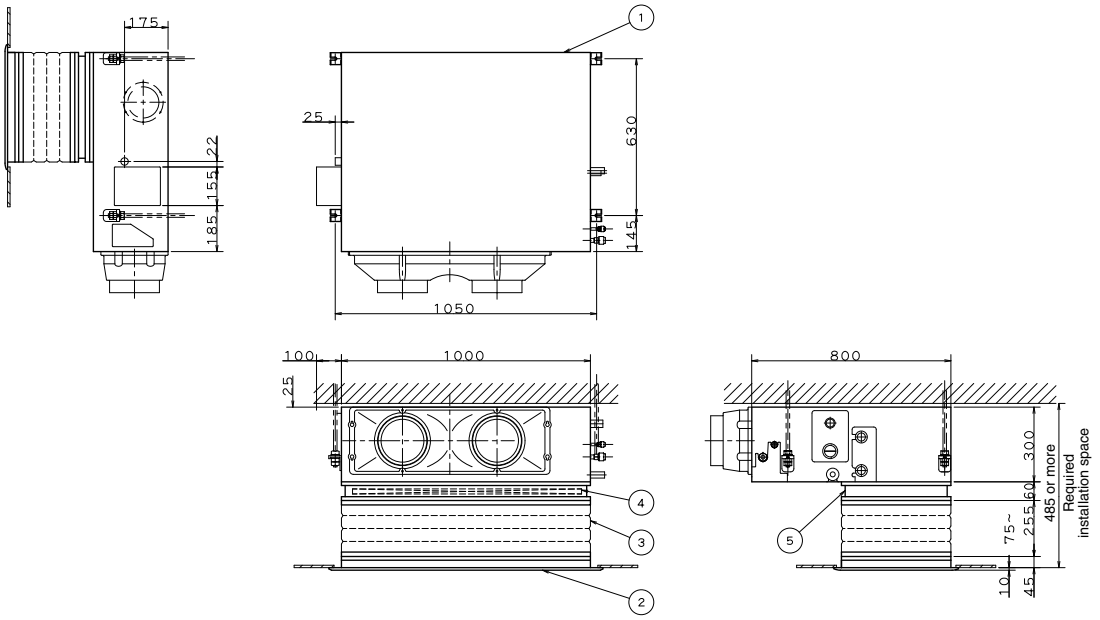

Number	Name	Description
5	Bottom suction filter chamber	
4	High efficiency filter	
3	Air suction canvas	
2	Suction half panel	
1	Built-in Hi type body	

Note)
1. When optional accessory other than these kits will be built in, refer to the external drawing with optional accessories.
2. Parts names ②~⑦ show optional accessories.

JC : DU826-207F

■ FXSQ80~125M

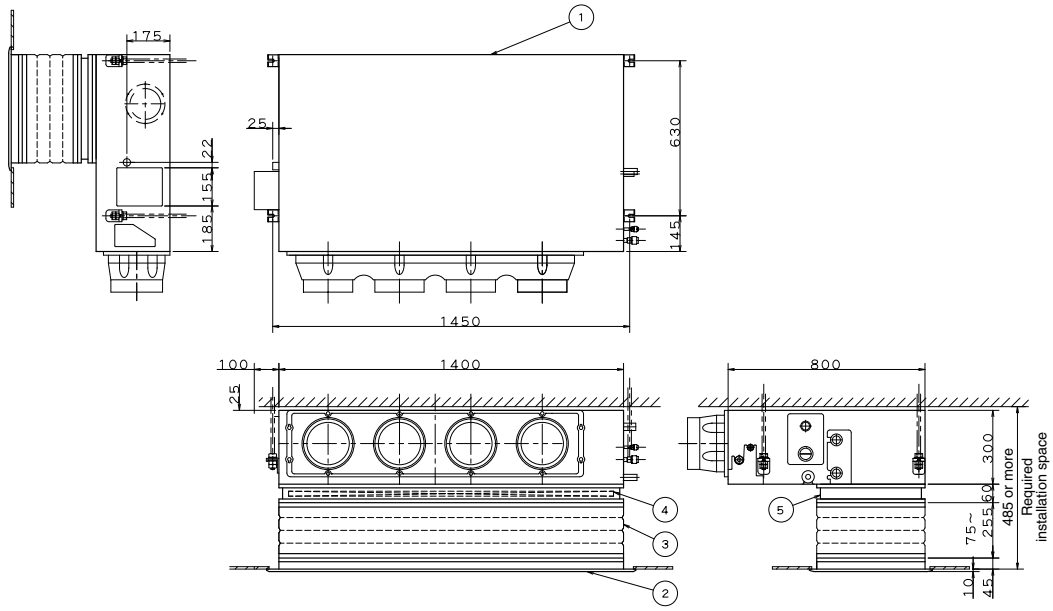

Number	Name	Description
5	Bottom suction filter chamber	
4	High efficiency filter	
3	Air suction canvas	
2	Suction half panel	
1	Built-in Hi type body	

Note)
1. When optional accessory other than these kits will be built in, refer to the external drawing with optional accessories.
2. Parts names ②~⑦ show optional accessories.

JC : DU828-215F

Duct Style Installation

■ FXSQ20~32M

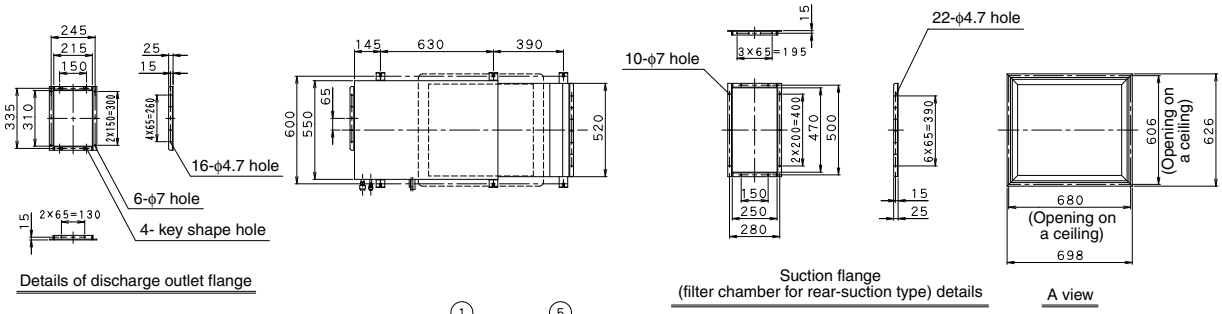

Details of discharge outlet flange

Suction flange (filter chamber for rear-suction type) details

A view

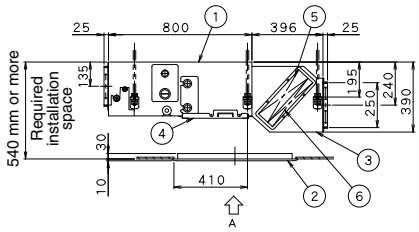

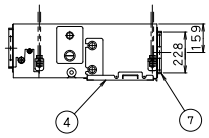

At installation of suction flange

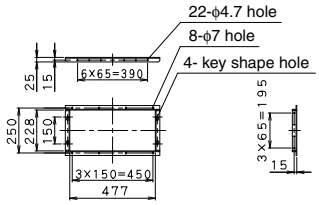

Suction flange details

Note)
1. When optional accessory other than these kits will be built in, refer to the external drawing with optional accessories.
2. Parts names ②~⑦ show optional accessories.

Number	Name	Description
7	Suction inlet flange	
6	Long life filter	
5	High efficiency filter	
4	Rear-suction sealing plate	
3	Rear-suction filter chamber	(with rear-suction sealing plate)
2	Access panel	
1	Built-in unit body	

JC : DU220-248B

■ FXSQ40 · 50M

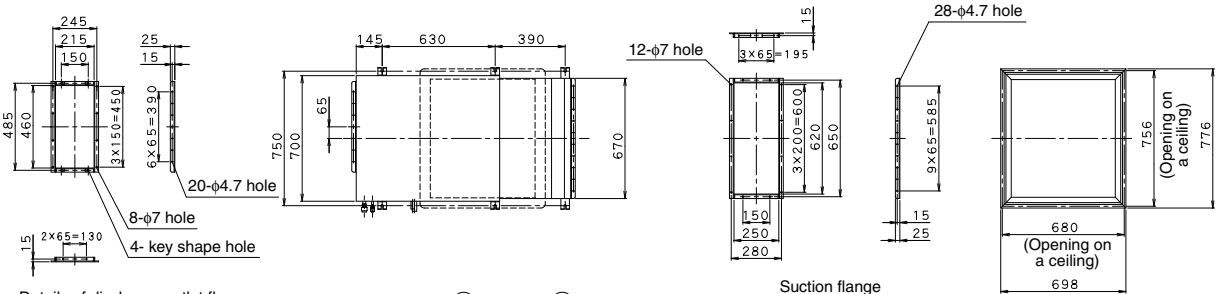

Details of discharge outlet flange

Suction flange (filter chamber for rear-suction type) details

A view

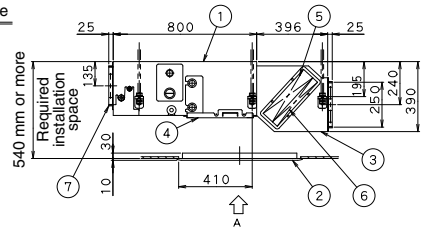

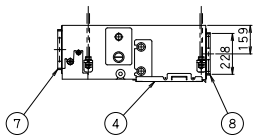

At installation of suction flange

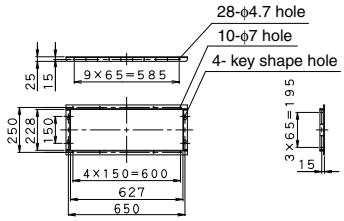

Suction flange details

Note)
1. When optional accessory other than these kits will be built in, refer to the external drawing with optional accessories.
2. Parts names ②~⑧ show optional accessories.

Number	Name	Description
8	Suction inlet flange	
7	Suction flange	
6	Long life filter	
5	High efficiency filter	
4	Rear-suction sealing plate	
3	Rear-suction filter chamber	(with rear-suction sealing plate)
2	Access panel	
1	Built-in Hi type body	

JC : DU425-2115E

Duct Style Installation

■ FXSQ63M

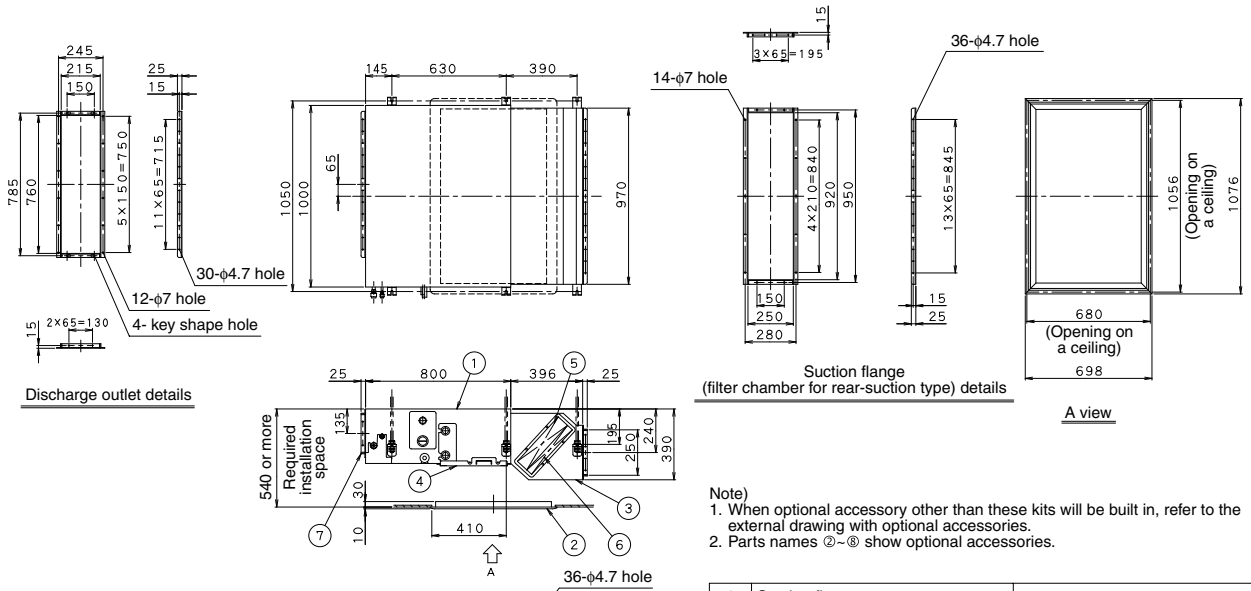

Note)
1. When optional accessory other than these kits will be built in, refer to the external drawing with optional accessories.
2. Parts names ②~⑧ show optional accessories.

Number	Name	Description
8	Suction flange	
7	Discharge outlet flange	
6	Long life filter for rear-suction type	
5	High efficiency filter	
4	Rear-suction sealing plate	
3	Rear-suction type filter chamber	(with rear-suction sealing plate)
2	Access panel	
1	Built-in Hi type body	

JC : DU826-208F

■ FXSQ80~125M

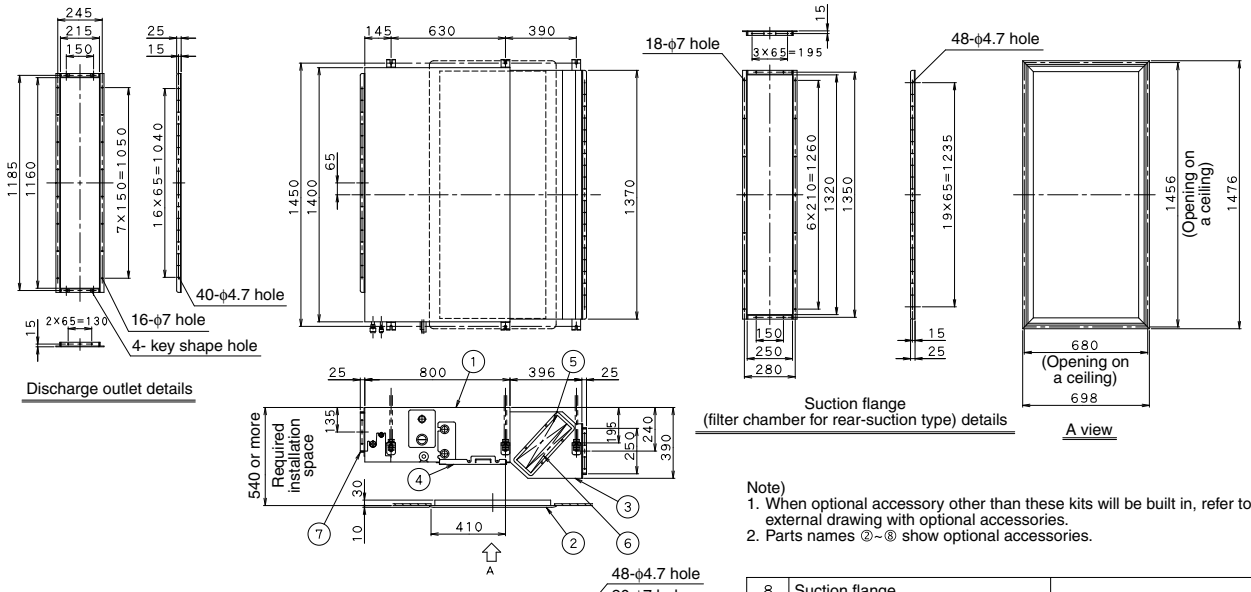

Note)
1. When optional accessory other than these kits will be built in, refer to the external drawing with optional accessories.
2. Parts names ②~⑧ show optional accessories.

Number	Name	Description
8	Suction flange	
7	Discharge outlet flange	
6	Long life filter for rear-suction type	
5	High efficiency filter	
4	Rear-suction sealing plate	
3	Rear-suction type filter chamber	(with rear-suction sealing plate)
2	Access panel	
1	Built-in Hi type body	

JC : DU828-216F

FXMQ-MA
Ceiling Mounted Duct Type

1. Features 198
2. Specifications 199
3. Dimensions 201
4. Piping Diagrams 204
5. Wiring Diagrams 205
6. Electric Characteristics 206
7. Capacity Tables 207
   7.1 Cooling Capacity 207
   7.2 Heating Capacity 208
8. Fan Performances 209
   8.1 50Hz 209
   8.2 60Hz 210
9. Sound Levels 211
10. Installation 212
11. Accessories 216

1. Features

Ceiling mounted duct type is newly added to the line-up of the indoor unit for VRV series, which gives you much more flexibility in designing of the air conditioning system to satisfy the needs of individual air-conditioning even in the broad area.

■ **High external static pressure allows extensive duct work for flexible applications.**

Ceiling mounted duct type
FXMQ40MA FXMQ50MA FXMQ63MA FXMQ80MA FXMQ100MA FXMQ125MA

Wide line-up to increase the flexibility in system designing.



40~80 type



100 · 125 type

2. Specifications

Ceiling Mounted Duct Type

Model			FXMQ40MAVE	FXMQ50MAVE	FXMQ63MAVE	FXMQ80MAVE
∗1 Cooling Capacity (19.5°CWB)		kcal/h	4,000	5,000	6,300	8,000
		Btu/h	16,000	19,800	24,900	31,700
		kW	4.7	5.8	7.3	9.3
∗2 Cooling Capacity (19.0°CWB)		kW	4.5	5.6	7.1	9.0
∗3 Heating Capacity		kcal/h	4,300	5,400	6,900	8,600
		Btu/h	17,100	21,500	27,300	34,100
		kW	5.0	6.3	8.0	10.0
Casing			Galvanized Steel Plate	Galvanized Steel Plate	Galvanized Steel Plate	Galvanized Steel Plate
Dimensions: (H×W×D)		mm	390×720×690	390×720×690	390×720×690	390×720×690
Coil (Cross Fin Coil)	Rows×Stages×Fin Pitch	mm	3×16×2.0	3×16×2.0	3×16×2.0	3×16×2.0
	Face Area	m²	0.181	0.181	0.181	0.181
Fan	Model		D11/2D3AB1VE	D11/2D3AB1VE	D11/2D3AB1VE	D11/2D3AA1VE
	Type		Sirocco Fan	Sirocco Fan	Sirocco Fan	Sirocco Fan
	Motor Output × Number of Units	W	100×1	100×1	100×1	160×1
	Air Flow Rate (H/L)	m³/min	14/11.5	14/11.5	14/11.5	19.5/16
		cfm	494/406	494/406	494/406	688/565
	External Static Pressure 50 / 60Hz	Pa	157/157-118/108 ∗4	157/157-118/108 ∗4	157/157-118/108 ∗4	157/160-108/98 ∗4
	Drive		Direct Drive	Direct Drive	Direct Drive	Direct Drive
Temperature Control			Microprocessor Thermostat for Cooling and Heating	Microprocessor Thermostat for Cooling and Heating	Microprocessor Thermostat for Cooling and Heating	Microprocessor Thermostat for Cooling and Heating
Sound Absorbing Thermal Insulation Material			Glass Fiber	Glass Fiber	Glass Fiber	Glass Fiber
Air Filter			∗5	∗5	∗5	∗5
Piping Connections	Liquid Pipes	mm	ϕ6.4 (Flare Connection)	ϕ6.4 (Flare Connection)	ϕ9.5 (Flare Connection)	ϕ9.5 (Flare Connection)
	Gas Pipes	mm	ϕ12.7 (Flare Connection)	ϕ12.7 (Flare Connection)	ϕ15.9 (Flare Connection)	ϕ15.9 (Flare Connection)
	Drain Pipe	mm	VP25 (External Dia. 32 Internal Dia. 25)	VP25 (External Dia. 32 Internal Dia. 25)	VP25 (External Dia. 32 Internal Dia. 25)	VP25 (External Dia. 32 Internal Dia. 25)
Machine Weight (Mass)		kg	44	44	44	45
∗7 Sound Level (H/L) (220V)		dBA	39/35	39/35	39/35	42/38
Safety Devices			Fuse. Thermal Fuse for Fan Motor.	Fuse. Thermal Fuse for Fan Motor.	Fuse. Thermal Fuse for Fan Motor.	Fuse. Thermal Fuse for Fan Motor.
Refrigerant Control			Electronic Expansion Valve	Electronic Expansion Valve	Electronic Expansion Valve	Electronic Expansion Valve
Connectable Outdoor Unit			R-410A P Series	R-410A P Series	R-410A P Series	R-410A P Series
Standard Accessories			Operation Manual. Installation Manual. Drain Hose. Clamp Metal. Insulation for Fitting. Sealing Pads. Clamps. Screws.	Operation Manual. Installation Manual. Drain Hose. Clamp Metal. Insulation for Fitting. Sealing Pads. Clamps. Screws.	Operation Manual. Installation Manual. Drain Hose. Clamp Metal. Insulation for Fitting. Sealing Pads. Clamps. Screws.	Operation Manual. Installation Manual. Drain Hose. Clamp Metal. Insulation for Fitting. Sealing Pads. Clamps. Screws.
Drawing No.			C : 3D038814A			

Note:

∗1 Indoor temp. : 27°CDB, 19.5°CWB / outdoor temp. : 35°CDB / Equivalent piping length : 7.5 m, level difference : 0 m.
∗2 Indoor temp. : 27°CDB, 19.0°CWB / outdoor temp. : 35°CDB / Equivalent piping length : 7.5 m, level difference : 0 m.
∗3 Indoor temp. : 20°CDB / outdoor temp. : 7°CDB, 6°CWB / Equivalent piping length : 7.5 m, level difference : 0 m.
∗4 External static pressure is changeable to change over the connectors inside electrical box, this pressure means "High static pressure-Standard".
∗5 Air filter is not standard accessory, but please mount it in the duct system of the suction side. Select its colorimetric method (gravity method) 50% or more.
6 Capacities are net, including a deduction for cooling (an addition for heating) for indoor fan motor heat.
∗7 Anechoic chamber conversion value, measured at a point 1.5 m downward from the unit center. These values are normally somewhat higher during actual operation as a result of ambient conditions.
8 Refer to page 206 for Fan Motor Input.

Conversion Formulae
kcal/h=kW×860 Btu/h=kW×3412 cfm=m³/min×35.3

7

Ceiling Mounted Duct Type

Model			FXMQ100MAVE	FXMQ125MAVE
∗1 Cooling Capacity (19.5°CWB)		kcal/h	10,000	12,500
		Btu/h	39,600	49,500
		kW	11.6	14.5
∗2 Cooling Capacity (19.0°CWB)		kW	11.2	14.0
∗3 Heating Capacity		kcal/h	10,800	13,800
		Btu/h	42,700	54,600
		kW	12.5	16.0
Casing			Galvanized Steel Plate	Galvanized Steel Plate
Dimensions: (H×W×D)		mm	390×1,110×690	390×1,110×690
Coil (Cross Fin Coil)	Rows×Stages×Fin Pitch	mm	3×16×2.0	3×16×2.0
	Face Area	m²	0.319	0.319
Fan	Model		2D11/2D3AG1VE	2D11/2D3AF1VE
	Type		Sirocco Fan	Sirocco Fan
	Motor Output × Number of Units	W	270×1	430×1
	Air Flow Rate (H/L)	m³/min	29/23	36/29
		cfm	1,024/812	1,271/1,024
	External Static Pressure 50 / 60Hz	Pa	157/172-98/98 ∗4	191/245-152/172 ∗4
	Drive		Direct Drive	Direct Drive
Temperature Control			Microprocessor Thermostat for Cooling and Heating	Microprocessor Thermostat for Cooling and Heating
Sound Absorbing Thermal Insulation Material			Glass Fiber	Glass Fiber
Air Filter			∗5	∗5
Piping Connections	Liquid Pipes	mm	ϕ9.5 (Flare Connection)	ϕ9.5 (Flare Connection)
	Gas Pipes	mm	ϕ15.9 (Flare Connection)	ϕ15.9 (Flare Connection)
	Drain Pipe	mm	VP25 (External Dia. 32 / Internal Dia. 25)	VP25 (External Dia. 32 / Internal Dia. 25)
Machine Weight (Mass)		kg	63	65
∗7 Sound Level (H/L) (220V)		dBA	43/39	45/42
Safety Devices			Fuse. Thermal Fuse for Fan Motor.	Fuse. Thermal Fuse for Fan Motor.
Refrigerant Control			Electronic Expansion Valve	Electronic Expansion Valve
Connectable Outdoor Unit			R-410A P Series	R-410A P Series
Standard Accessories			Operation Manual. Installation Manual. Drain Hose. Clamp Metal. Insulation for Fitting. Sealing Pads. Clamps. Screws.	Operation Manual. Installation Manual. Drain Hose. Clamp Metal. Insulation for Fitting. Sealing Pads. Clamps. Screws.
Drawing No.			C : 3D038814A	

Note:

∗1 Indoor temp. : 27°CDB, 19.5°CWB / outdoor temp. : 35°CDB / Equivalent piping length : 7.5 m, level difference : 0 m.
∗2 Indoor temp. : 27°CDB, 19.0°CWB / outdoor temp. : 35°CDB / Equivalent piping length : 7.5 m, level difference : 0 m.
∗3 Indoor temp. : 20°CDB / outdoor temp. : 7°CDB, 6°CWB / Equivalent piping length : 7.5 m, level difference : 0 m.
∗4 External static pressure is changeable to change over the connectors inside electrical box, this pressure means "High static pressure-Standard".
∗5 Air filter is not standard accessory, but please mount it in the duct system of the suction side. Select its colorimetric method (gravity method) 50% or more.
6 Capacities are net, including a deduction for cooling (an addition for heating) for indoor fan motor heat.
∗7 Anechoic chamber conversion value, measured at a point 1.5 m downward from the unit center. These values are normally somewhat higher during actual operation as a result of ambient conditions.
8 Refer to page 206 for Fan Motor Input.

Conversion Formulae
kcal/h=kW×860 Btu/h=kW×3412 cfm=m³/min×35.3

3. Dimensions

FXMQ40MA
FXMQ50MA

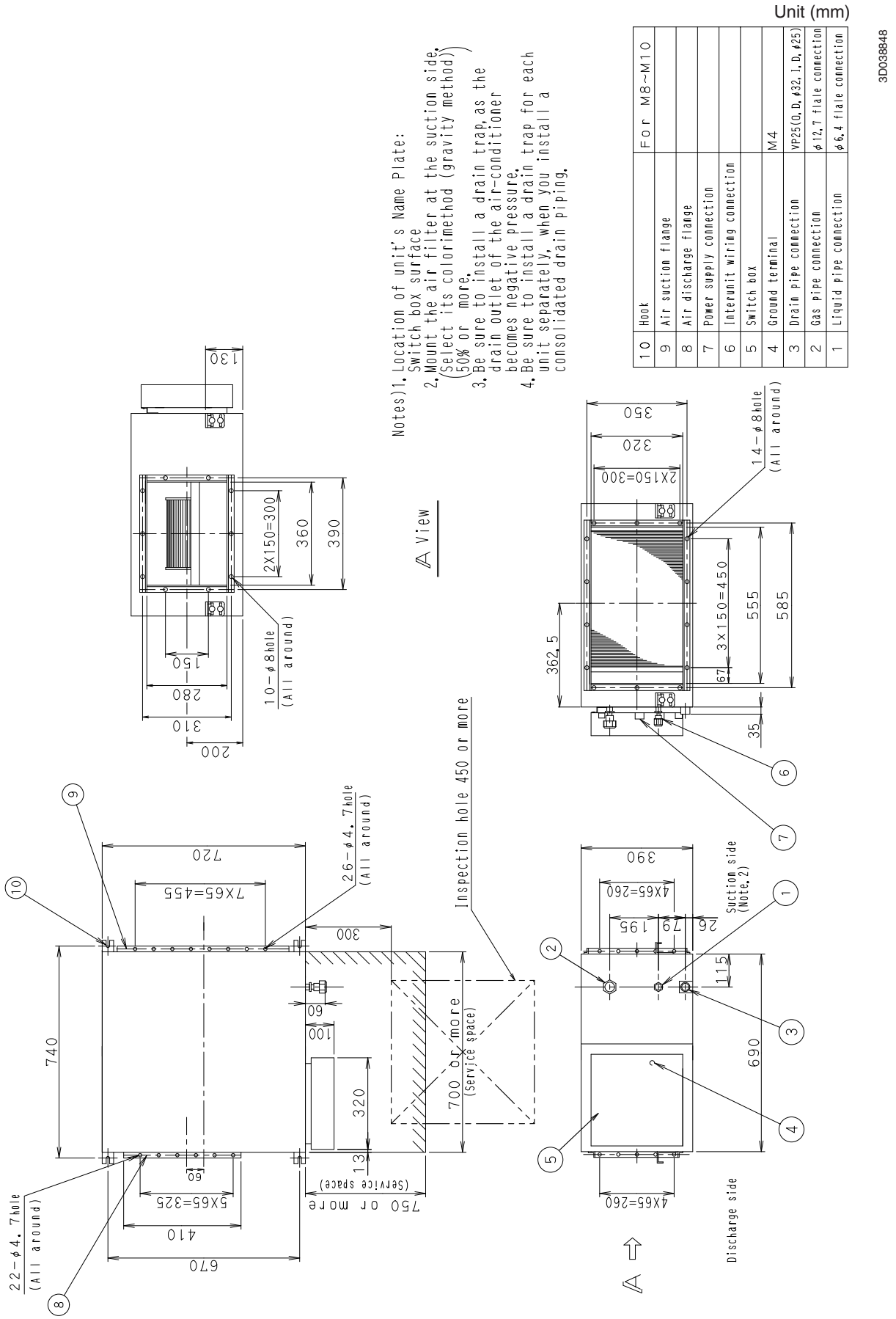

FXMQ63MA
FXMQ80MA

Unit (mm)

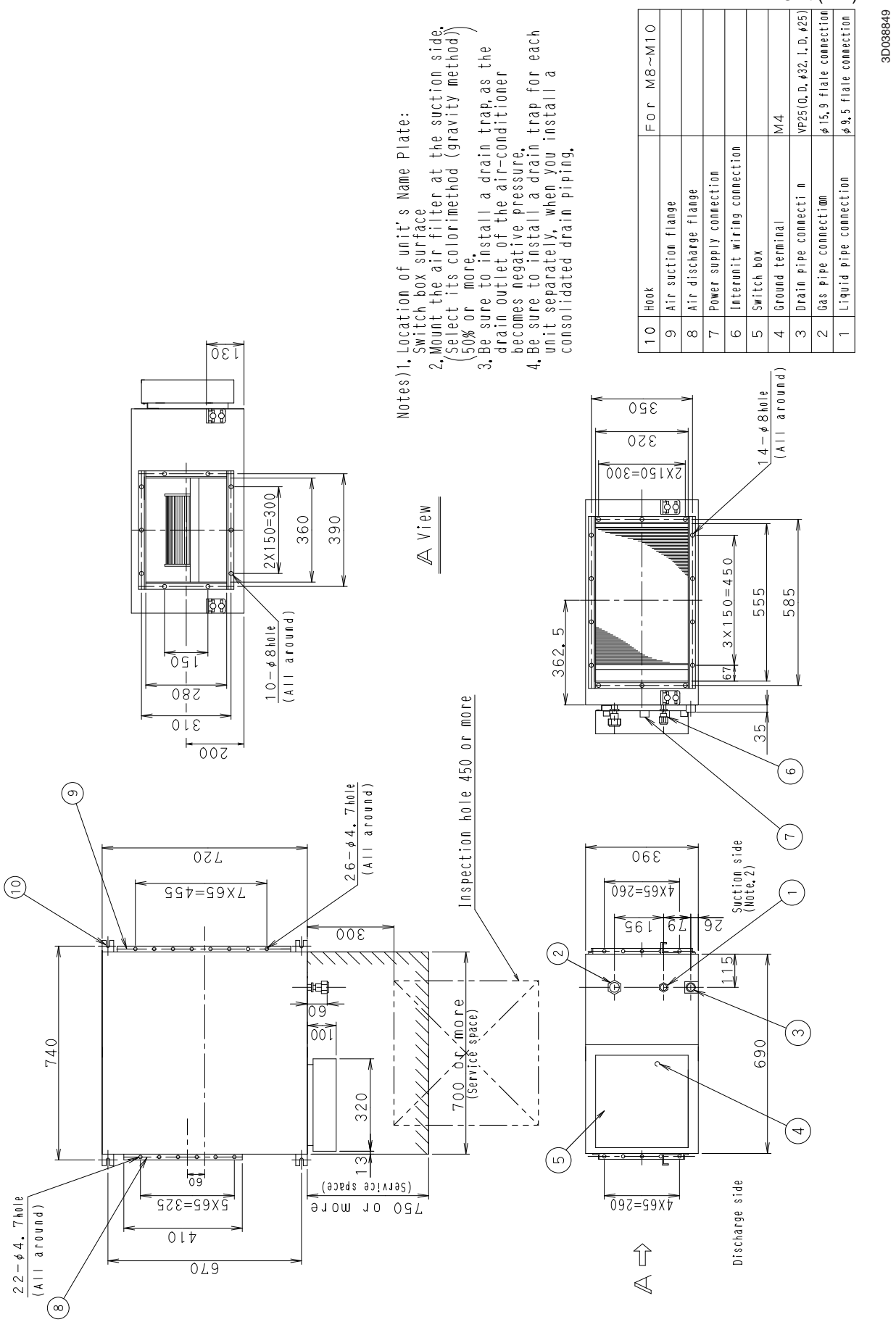

FXMQ100MA
FXMQ125MA

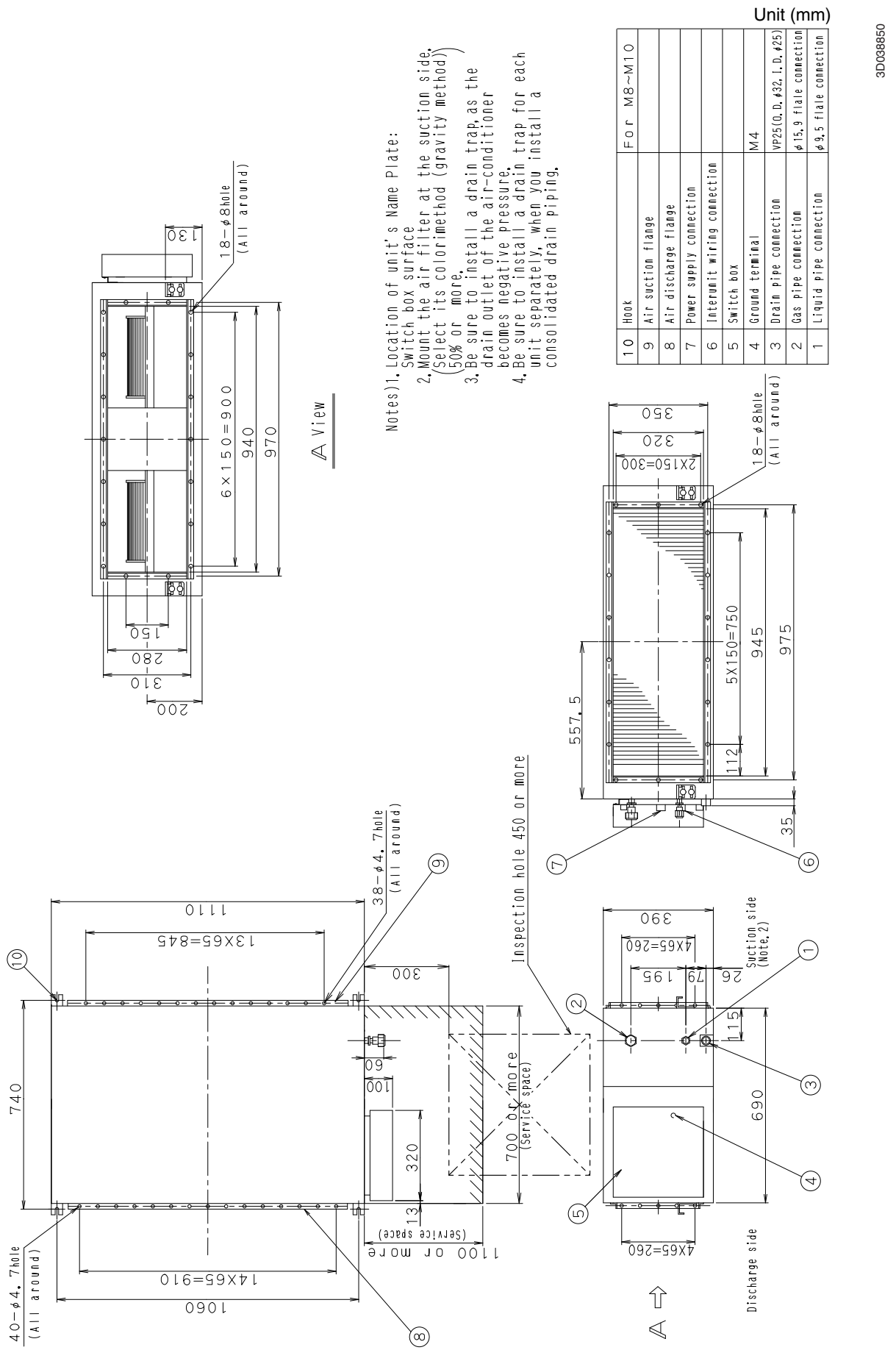

4. Piping Diagrams

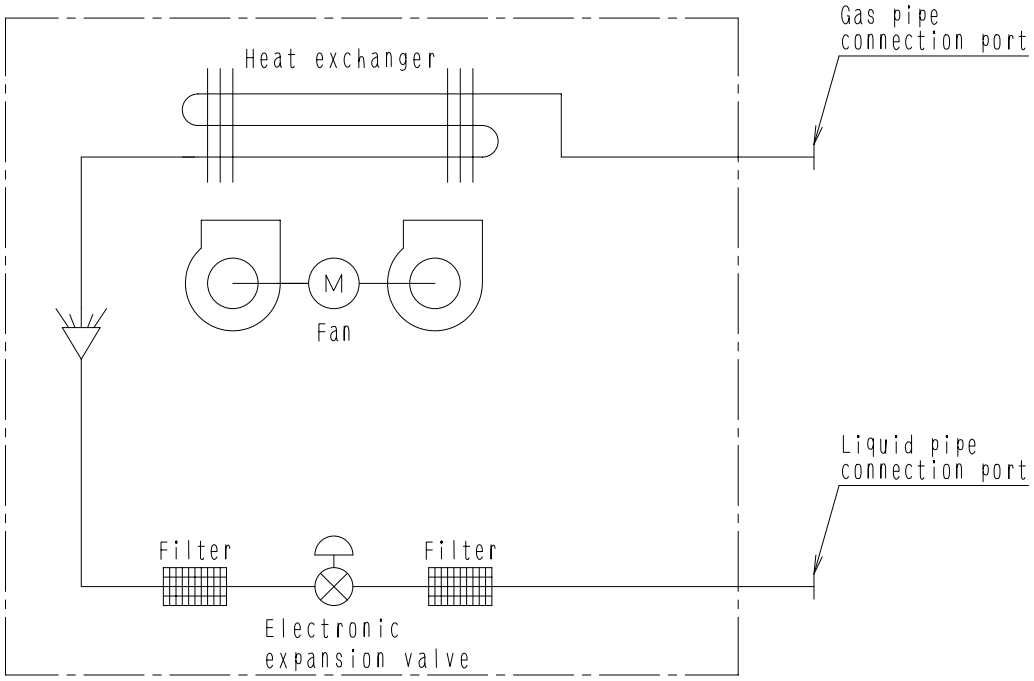

4D034245B

■ **Refrigerant pipe connection port diameters**

(mm)

Model	Gas	Liquid
FXMQ40 · 50MA	ϕ12.7	ϕ6.4
FXMQ63 · 80 · 100 · 125MA	ϕ15.9	ϕ9.5

5. Wiring Diagrams

FXMQ40 · 50 · 63 · 80 · 100 · 125MAVE

3D039620B

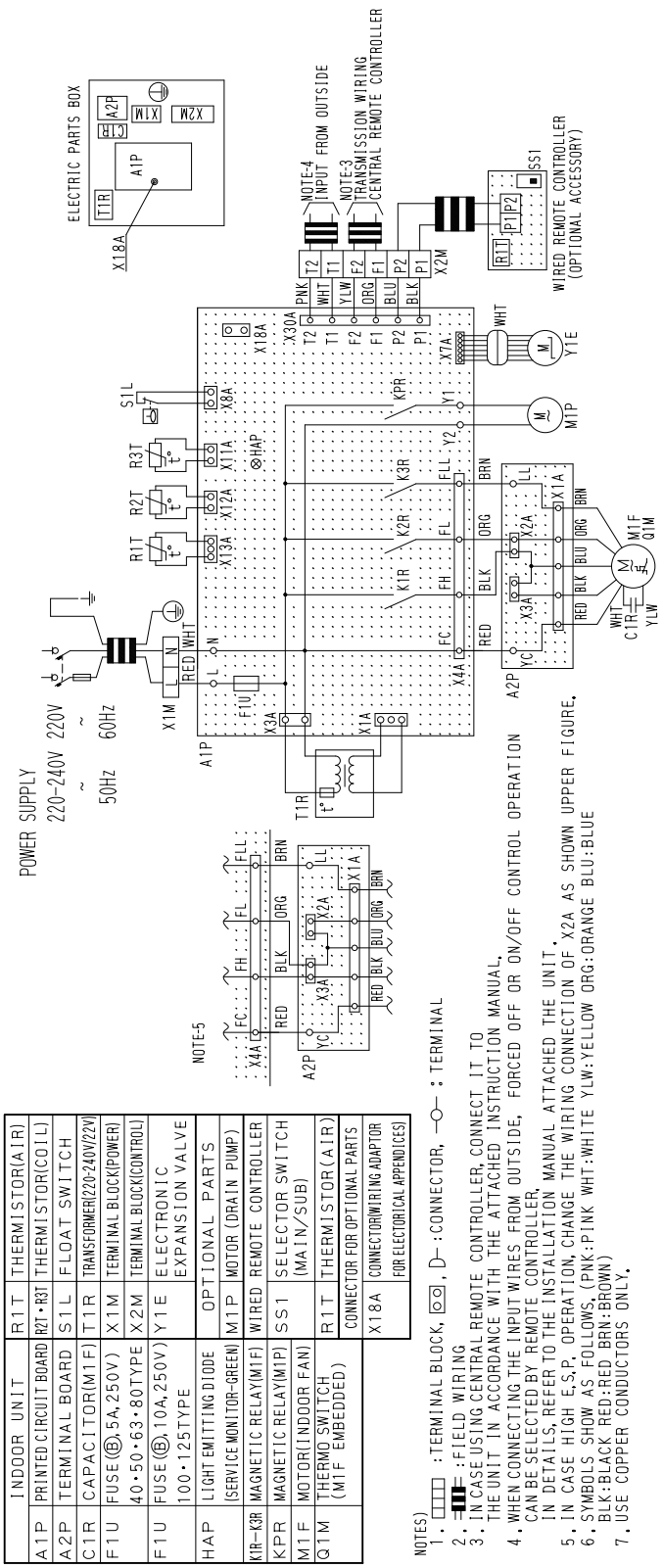

INDOOR UNIT		R1T	THERMISTOR(AIR)
A1P	PRINTED CIRCUIT BOARD	R2T・R3T	THERMISTOR(COIL)
A2P	TERMINAL BOARD	S1L	FLOAT SWITCH
C1R	CAPACITOR(M1F)	T1R	TRANSFORMER(220-240V/22V)
F1U	FUSE(Ⓑ,5A,250V) 40・50・63・80TYPE	X1M	TERMINAL BLOCK(POWER)
F1U	FUSE(Ⓑ,10A,250V) 100・125TYPE	X2M	TERMINAL BLOCK(CONTROL)
HAP	LIGHT EMITTING DIODE (SERVICE MONITOR-GREEN)	Y1E	ELECTRONIC EXPANSION VALVE
K1R~K3R	MAGNETIC RELAY(M1F)	OPTIONAL PARTS	
KPR	MAGNETIC RELAY(M1P)	M1P	MOTOR (DRAIN PUMP)
M1F	MOTOR(INDOOR FAN)	WIRED	REMOTE CONTROLLER
Q1M	THERMO SWITCH (M1F EMBEDDED)	SS1	SELECTOR SWITCH (MAIN/SUB)
		R1T	THERMISTOR(AIR)
		CONNECTOR FOR OPTIONAL PARTS	
		X18A	CONNECTOR(WIRING ADAPTOR FOR ELECTORICAL APPENDICES)

6. Electric Characteristics

Units					Power supply		IFM		Input(W)	
Model	Type	Hz	Volts	Voltage range	MCA	MFA	KW	FLA	Cooling	Heating
FXMQ40・50・63M(A)	VE	50	220-240	MAX. 264 Min. 198	1.3	15	0.100	1.0	211	211
FXMQ80M(A)					1.5	15	0.160	1.2	284	284
FXMQ100M(A)					2.5	15	0.270	2.0	411	411
FXMQ125M(A)					3.8	15	0.430	3.0	619	619
FXMQ40・50・63M(A)	VE	60	220	MAX. 242 Min. 198	1.4	15	0.100	1.1	225	225
FXMQ80M(A)					1.6	15	0.160	1.3	307	307
FXMQ100M(A)					3.0	15	0.270	2.4	451	451
FXMQ125M(A)					4.4	15	0.430	3.5	745	745

Symbols:

MCA : Min. Circuit Amps (A)
MFA : Max. Fuse Amps (See note 5)
KW : Fan Motor Rated Output(KW)
FLA : Full Load Amps(A)
IFM : Indoor Fan Motor

Note:

1. Voltage range

   Units are suitable for use on electrical systems where voltage supplied to unit terminals is not below or above listed range limits.

2. Maximum allowable voltage unbalance between phases is 2%.

3. MCA/MFA

   MCA = 1.25 X FLA

   MFA ≦ 4 X FLA
   (Next lower standard fuse rating. Min.15A)

4. Select wire size based on the MCA.

5. Instead of fuse, use Circuit Breaker.

C : 4D040330A

7. Capacity Tables

7.1 Cooling Capacity

FXMQ-MA **[50/60Hz]**

Cooling capacity

Unit Size	Outdoor air temp. °CDB	Indoor air temp. 14.0°CWB 20°CDB TC	SHC	16.0°CWB 23°CDB TC	SHC	18.0°CWB 26°CDB TC	SHC	19.0°CWB 27°CDB TC	SHC	20.0°CWB 28°CDB TC	SHC	22.0°CWB 30°CDB TC	SHC	24.0°CWB 32°CDB TC	SHC
40	10.0	3.0	2.9	3.6	3.1	4.2	3.5	4.5	3.5	4.8	3.6	5.4	3.7	5.9	3.7
	12.0	3.0	2.9	3.6	3.1	4.2	3.5	4.5	3.5	4.8	3.6	5.4	3.7	5.8	3.7
	14.0	3.0	2.9	3.6	3.1	4.2	3.5	4.5	3.5	4.8	3.6	5.4	3.7	5.8	3.7
	16.0	3.0	2.9	3.6	3.1	4.2	3.5	4.5	3.5	4.8	3.6	5.4	3.7	5.7	3.6
	18.0	3.0	2.9	3.6	3.1	4.2	3.5	4.5	3.5	4.8	3.6	5.4	3.7	5.6	3.6
	20.0	3.0	2.9	3.6	3.1	4.2	3.5	4.5	3.5	4.8	3.6	5.4	3.7	5.5	3.5
	21.0	3.0	2.9	3.6	3.1	4.2	3.5	4.5	3.5	4.8	3.6	5.4	3.7	5.5	3.5
	23.0	3.0	2.9	3.6	3.1	4.2	3.5	4.5	3.5	4.8	3.6	5.3	3.6	5.4	3.4
	25.0	3.0	2.9	3.6	3.1	4.2	3.5	4.5	3.5	4.8	3.6	5.2	3.5	5.3	3.4
	27.0	3.0	2.9	3.6	3.1	4.2	3.5	4.5	3.5	4.8	3.6	5.1	3.5	5.2	3.4
	29.0	3.0	2.9	3.6	3.1	4.2	3.5	4.5	3.5	4.8	3.6	5.0	3.5	5.1	3.3
	31.0	3.0	2.9	3.6	3.1	4.2	3.5	4.5	3.5	4.8	3.6	4.9	3.4	5.0	3.3
	33.0	3.0	2.9	3.6	3.1	4.2	3.5	4.5	3.5	4.7	3.5	4.8	3.4	4.9	3.3
	35.0	3.0	2.9	3.6	3.1	4.2	3.5	4.5	3.5	4.7	3.5	4.7	3.4	4.8	3.2
	37.0	3.0	2.9	3.6	3.1	4.2	3.5	4.5	3.6	4.6	3.5	4.7	3.4	4.8	3.2
	39.0	3.0	2.9	3.6	3.1	4.2	3.5	4.5	3.6	4.6	3.5	4.7	3.4	4.8	3.2
50	10.0	3.8	3.3	4.5	3.6	5.2	4.0	5.6	4.1	6.0	4.2	6.7	4.3	7.4	4.3
	12.0	3.8	3.3	4.5	3.6	5.2	4.0	5.6	4.1	6.0	4.2	6.7	4.3	7.3	4.3
	14.0	3.8	3.3	4.5	3.6	5.2	4.0	5.6	4.1	6.0	4.2	6.7	4.3	7.2	4.2
	16.0	3.8	3.3	4.5	3.6	5.2	4.0	5.6	4.1	6.0	4.2	6.7	4.3	7.1	4.2
	18.0	3.8	3.3	4.5	3.6	5.2	4.0	5.6	4.1	6.0	4.2	6.7	4.3	7.0	4.1
	20.0	3.8	3.3	4.5	3.6	5.2	4.0	5.6	4.1	6.0	4.2	6.7	4.3	6.9	4.1
	21.0	3.8	3.3	4.5	3.6	5.2	4.0	5.6	4.1	6.0	4.2	6.7	4.3	6.8	4.0
	23.0	3.8	3.3	4.5	3.6	5.2	4.0	5.6	4.1	6.0	4.2	6.6	4.2	6.7	4.0
	25.0	3.8	3.3	4.5	3.6	5.2	4.0	5.6	4.1	6.0	4.2	6.5	4.2	6.6	4.0
	27.0	3.8	3.3	4.5	3.6	5.2	4.0	5.6	4.1	6.0	4.2	6.4	4.1	6.6	3.9
	29.0	3.8	3.3	4.5	3.6	5.2	4.0	5.6	4.1	6.0	4.2	6.3	4.1	6.5	3.9
	31.0	3.8	3.3	4.5	3.6	5.2	4.0	5.6	4.1	6.0	4.2	6.2	4.0	6.4	3.8
	33.0	3.8	3.3	4.5	3.6	5.2	4.0	5.6	4.1	6.0	4.2	6.1	4.0	6.3	3.8
	35.0	3.8	3.3	4.5	3.6	5.2	4.0	5.6	4.1	5.9	4.1	6.0	4.0	6.2	3.8
	37.0	3.8	3.3	4.5	3.6	5.2	4.0	5.6	4.1	5.8	4.1	5.9	3.9	6.1	3.7
	39.0	3.8	3.3	4.5	3.6	5.2	4.0	5.6	4.1	5.7	4.0	5.8	3.9	6.0	3.7
63	10.0	4.8	3.8	5.7	4.2	6.6	4.6	7.1	4.6	7.6	4.6	8.5	4.8	9.3	4.9
	12.0	4.8	3.8	5.7	4.2	6.6	4.6	7.1	4.6	7.6	4.6	8.5	4.8	9.2	4.9
	14.0	4.8	3.8	5.7	4.2	6.6	4.6	7.1	4.6	7.6	4.6	8.5	4.8	9.1	4.8
	16.0	4.8	3.8	5.7	4.2	6.6	4.6	7.1	4.6	7.6	4.6	8.5	4.8	9.0	4.8
	18.0	4.8	3.8	5.7	4.2	6.6	4.6	7.1	4.6	7.6	4.6	8.5	4.8	8.8	4.7
	20.0	4.8	3.8	5.7	4.2	6.6	4.6	7.1	4.6	7.6	4.6	8.5	4.8	8.7	4.7
	21.0	4.8	3.8	5.7	4.2	6.6	4.6	7.1	4.6	7.6	4.6	8.5	4.8	8.7	4.7
	23.0	4.8	3.8	5.7	4.2	6.6	4.6	7.1	4.6	7.6	4.6	8.4	4.8	8.5	4.6
	25.0	4.8	3.8	5.7	4.2	6.6	4.6	7.1	4.6	7.6	4.6	8.3	4.7	8.4	4.6
	27.0	4.8	3.8	5.7	4.2	6.6	4.6	7.1	4.6	7.6	4.6	8.1	4.7	8.3	4.6
	29.0	4.8	3.8	5.7	4.2	6.6	4.6	7.1	4.6	7.6	4.6	8.0	4.6	8.2	4.5
	31.0	4.8	3.8	5.7	4.2	6.6	4.6	7.1	4.6	7.6	4.6	7.9	4.6	8.1	4.5
	33.0	4.8	3.8	5.7	4.2	6.6	4.6	7.1	4.6	7.6	4.6	7.8	4.6	7.9	4.4
	35.0	4.8	3.8	5.7	4.2	6.6	4.6	7.1	4.6	7.5	4.5	7.7	4.5	7.8	4.4
	37.0	4.8	3.8	5.7	4.2	6.6	4.6	7.1	4.6	7.4	4.6	7.5	4.5	7.7	4.3
	39.0	4.8	3.8	5.7	4.2	6.6	4.6	7.1	4.6	7.2	4.6	7.4	4.4	7.6	4.3
80	10.0	6.1	4.9	7.2	5.4	8.4	5.9	9.0	6.0	9.6	6.0	10.8	6.2	11.8	6.4
	12.0	6.1	4.9	7.2	5.4	8.4	5.9	9.0	6.0	9.6	6.0	10.8	6.2	11.7	6.3
	14.0	6.1	4.9	7.2	5.4	8.4	5.9	9.0	6.0	9.6	6.0	10.8	6.2	11.5	6.3
	16.0	6.1	4.9	7.2	5.4	8.4	5.9	9.0	6.0	9.6	6.0	10.8	6.2	11.4	6.2
	18.0	6.1	4.9	7.2	5.4	8.4	5.9	9.0	6.0	9.6	6.0	10.8	6.2	11.2	6.2
	20.0	6.1	4.9	7.2	5.4	8.4	5.9	9.0	6.0	9.6	6.0	10.8	6.2	11.1	6.1
	21.0	6.1	4.9	7.2	5.4	8.4	5.9	9.0	6.0	9.6	6.0	10.8	6.2	11.0	6.1
	23.0	6.1	4.9	7.2	5.4	8.4	5.9	9.0	6.0	9.6	6.0	10.6	6.2	10.8	6.0
	25.0	6.1	4.9	7.2	5.4	8.4	5.9	9.0	6.0	9.6	6.0	10.5	6.1	10.7	6.0
	27.0	6.1	4.9	7.2	5.4	8.4	5.9	9.0	6.0	9.6	6.0	10.3	6.1	10.5	5.9
	29.0	6.1	4.9	7.2	5.4	8.4	5.9	9.0	6.0	9.6	6.0	10.2	6.0	10.4	5.9
	31.0	6.1	4.9	7.2	5.4	8.4	5.9	9.0	6.0	9.6	6.0	10.0	6.0	10.2	5.8
	33.0	6.1	4.9	7.2	5.4	8.4	5.9	9.0	6.0	9.6	6.0	9.8	5.9	10.1	5.7
	35.0	6.1	4.9	7.2	5.4	8.4	5.9	9.0	6.0	9.5	6.0	9.7	5.9	9.9	5.7
	37.0	6.1	4.9	7.2	5.4	8.4	5.9	9.0	6.0	9.3	5.9	9.5	5.8	9.8	5.6
	39.0	6.1	4.9	7.2	5.4	8.4	5.9	9.0	6.0	9.2	5.9	9.4	5.8	9.6	5.6

Cooling capacity

Unit Size	Outdoor air temp. °CDB	Indoor air temp. 14.0°CWB 20°CDB TC	SHC	16.0°CWB 23°CDB TC	SHC	18.0°CWB 26°CDB TC	SHC	19.0°CWB 27°CDB TC	SHC	20.0°CWB 28°CDB TC	SHC	22.0°CWB 30°CDB TC	SHC	24.0°CWB 32°CDB TC	SHC
100	10.0	7.6	6.7	9.0	7.4	10.5	8.3	11.2	8.3	11.9	8.5	13.4	8.7	14.7	8.8
	12.0	7.6	6.7	9.0	7.4	10.5	8.3	11.2	8.3	11.9	8.5	13.4	8.7	14.5	8.7
	14.0	7.6	6.7	9.0	7.4	10.5	8.3	11.2	8.3	11.9	8.5	13.4	8.7	14.4	8.6
	16.0	7.6	6.7	9.0	7.4	10.5	8.3	11.2	8.3	11.9	8.5	13.4	8.7	14.2	8.5
	18.0	7.6	6.7	9.0	7.4	10.5	8.3	11.2	8.3	11.9	8.5	13.4	8.7	14.0	8.4
	20.0	7.6	6.7	9.0	7.4	10.5	8.3	11.2	8.3	11.9	8.5	13.4	8.7	13.8	8.2
	21.0	7.6	6.7	9.0	7.4	10.5	8.3	11.2	8.3	11.9	8.5	13.4	8.7	13.7	8.2
	23.0	7.6	6.7	9.0	7.4	10.5	8.3	11.2	8.3	11.9	8.5	13.2	8.6	13.5	8.1
	25.0	7.6	6.7	9.0	7.4	10.5	8.3	11.2	8.3	11.9	8.5	13.0	8.5	13.3	8.0
	27.0	7.6	6.7	9.0	7.4	10.5	8.3	11.2	8.3	11.9	8.5	12.8	8.3	13.1	7.9
	29.0	7.6	6.7	9.0	7.4	10.5	8.3	11.2	8.3	11.9	8.5	12.6	8.3	12.9	7.9
	31.0	7.6	6.7	9.0	7.4	10.5	8.3	11.2	8.3	11.9	8.5	12.4	8.2	12.7	7.8
	33.0	7.6	6.7	9.0	7.4	10.5	8.3	11.2	8.3	11.9	8.5	12.2	8.2	12.5	7.7
	35.0	7.6	6.7	9.0	7.4	10.5	8.3	11.2	8.3	11.8	8.4	12.1	8.1	12.3	7.6
	37.0	7.6	6.7	9.0	7.4	10.5	8.3	11.2	8.3	11.6	8.3	11.9	8.0	12.2	7.6
	39.0	7.6	6.7	9.0	7.4	10.5	8.3	11.2	8.3	11.4	8.3	11.7	8.0	12.0	7.6
125	10.0	9.5	8.2	11.3	9.1	13.1	10.0	14.0	10.2	14.9	10.4	16.8	10.8	18.4	10.9
	12.0	9.5	8.2	11.3	9.1	13.1	10.0	14.0	10.2	14.9	10.4	16.8	10.8	18.2	10.8
	14.0	9.5	8.2	11.3	9.1	13.1	10.0	14.0	10.2	14.9	10.4	16.8	10.8	18.0	10.7
	16.0	9.5	8.2	11.3	9.1	13.1	10.0	14.0	10.2	14.9	10.4	16.8	10.8	17.7	10.5
	18.0	9.5	8.2	11.3	9.1	13.1	10.0	14.0	10.2	14.9	10.4	16.8	10.8	17.5	10.4
	20.0	9.5	8.2	11.3	9.1	13.1	10.0	14.0	10.2	14.9	10.4	16.8	10.8	17.2	10.2
	21.0	9.5	8.2	11.3	9.1	13.1	10.0	14.0	10.2	14.9	10.4	16.8	10.8	17.1	10.2
	23.0	9.5	8.2	11.3	9.1	13.1	10.0	14.0	10.2	14.9	10.4	16.5	10.7	16.9	10.1
	25.0	9.5	8.2	11.3	9.1	13.1	10.0	14.0	10.2	14.9	10.4	16.3	10.5	16.6	10.0
	27.0	9.5	8.2	11.3	9.1	13.1	10.0	14.0	10.2	14.9	10.4	16.1	10.4	16.4	9.9
	29.0	9.5	8.2	11.3	9.1	13.1	10.0	14.0	10.2	14.9	10.4	15.8	10.2	16.2	9.9
	31.0	9.5	8.2	11.3	9.1	13.1	10.0	14.0	10.2	14.9	10.4	15.6	10.1	15.9	9.8
	33.0	9.5	8.2	11.3	9.1	13.1	10.0	14.0	10.2	14.9	10.4	15.3	10.0	15.7	9.7
	35.0	9.5	8.2	11.3	9.1	13.1	10.0	14.0	10.2	14.8	10.4	15.1	10.0	15.4	9.6
	37.0	9.5	8.2	11.3	9.1	13.1	10.0	14.0	10.2	14.5	10.3	14.9	9.9	15.2	9.5
	39.0	9.5	8.2	11.3	9.1	13.1	10.0	14.0	10.3	14.3	10.1	14.6	9.8	15.0	9.4

TC Total capacity ; kW
SHC Sensible heat capacity ; kW

Refer to Outdoor Unit Capacity Tables : on page 339~, for the actual performance data of each indoor and outdoor unit combination.

7

7.2 Heating Capacity

FXMQ-MA [50/60Hz]

Heating capacity

Unit Size	Outdoor air temp. °CDB	Outdoor air temp. °CWB	Indoor air temp. °CDB 16.0 kW	18.0 kW	20.0 kW	21.0 kW	22.0 kW	24.0 kW
40	-19.8	-20.0	3.0	2.9	2.9	2.9	2.9	2.9
	-18.8	-19.0	3.0	3.0	3.0	3.0	3.0	3.0
	-16.7	-17.0	3.2	3.2	3.2	3.2	3.2	3.2
	-14.7	-15.0	3.4	3.4	3.4	3.4	3.4	3.4
	-12.6	-13.0	3.6	3.6	3.6	3.5	3.5	3.5
	-10.5	-11.0	3.7	3.7	3.7	3.7	3.7	3.7
	-9.5	-10.0	3.8	3.8	3.8	3.8	3.8	3.8
	-8.5	-9.1	3.9	3.9	3.9	3.9	3.9	3.9
	-7.0	-7.6	4.0	4.0	4.0	4.0	4.0	4.0
	-5.0	-5.6	4.2	4.2	4.2	4.2	4.2	4.2
	-3.0	-3.7	4.4	4.4	4.4	4.4	4.4	4.4
	0.0	-0.7	4.7	4.6	4.6	4.6	4.6	4.4
	3.0	2.2	4.9	4.9	4.8	4.8	4.7	4.4
	5.0	4.1	5.1	5.1	5.0	4.8	4.7	4.4
	7.0	6.0	5.2	5.2	5.0	4.8	4.7	4.4
	9.0	7.9	5.4	5.3	5.0	4.8	4.7	4.4
	11.0	9.8	5.6	5.3	5.0	4.8	4.7	4.4
	13.0	11.8	5.6	5.3	5.0	4.8	4.7	4.4
	15.0	13.7	5.6	5.3	5.0	4.8	4.7	4.4
50	-19.8	-20.0	3.7	3.7	3.7	3.7	3.7	3.7
	-18.8	-19.0	3.8	3.8	3.8	3.8	3.8	3.8
	-16.7	-17.0	4.1	4.0	4.0	4.0	4.0	4.0
	-14.7	-15.0	4.3	4.3	4.3	4.2	4.2	4.2
	-12.6	-13.0	4.5	4.5	4.5	4.5	4.5	4.5
	-10.5	-11.0	4.7	4.7	4.7	4.7	4.7	4.7
	-9.5	-10.0	4.8	4.8	4.8	4.8	4.8	4.8
	-8.5	-9.1	4.9	4.9	4.9	4.9	4.9	4.9
	-7.0	-7.6	5.1	5.1	5.1	5.1	5.1	5.1
	-5.0	-5.6	5.3	5.3	5.3	5.3	5.3	5.3
	-3.0	-3.7	5.5	5.5	5.5	5.5	5.5	5.5
	0.0	-0.7	5.9	5.9	5.8	5.8	5.9	5.5
	3.0	2.2	6.2	6.2	6.3	6.1	5.9	5.5
	5.0	4.1	6.4	6.4	6.3	6.1	5.9	5.5
	7.0	6.0	6.6	6.6	6.3	6.1	5.9	5.5
	9.0	7.9	6.8	6.7	6.3	6.1	5.9	5.5
	11.0	9.8	7.0	6.7	6.3	6.1	5.9	5.5
	13.0	11.8	7.1	6.7	6.3	6.1	5.9	5.5
	15.0	13.7	7.1	6.7	6.3	6.1	5.9	5.5
63	-19.8	-20.0	4.7	4.7	4.7	4.7	4.7	4.7
	-18.8	-19.0	4.9	4.9	4.8	4.8	4.8	4.8
	-16.7	-17.0	5.1	5.1	5.1	5.1	5.1	5.1
	-14.7	-15.0	5.4	5.4	5.4	5.4	5.4	5.4
	-12.6	-13.0	5.7	5.7	5.7	5.7	5.7	5.7
	-10.5	-11.0	6.0	6.0	6.0	6.0	6.0	5.9
	-9.5	-10.0	6.1	6.1	6.1	6.1	6.1	6.1
	-8.5	-9.1	6.3	6.3	6.2	6.2	6.2	6.2
	-7.0	-7.6	6.5	6.5	6.4	6.4	6.4	6.4
	-5.0	-5.6	6.8	6.7	6.7	6.7	6.7	6.7
	-3.0	-3.7	7.0	7.0	7.0	7.0	7.0	7.0
	0.0	-0.7	7.5	7.4	7.4	7.4	7.5	7.0
	3.0	2.2	7.9	7.8	7.8	7.7	7.5	7.0
	5.0	4.1	8.4	8.1	8.0	7.7	7.5	7.0
	7.0	6.0	8.7	8.5	8.0	7.7	7.5	7.0
	9.0	7.9	8.9	8.5	8.0	7.7	7.5	7.0
	11.0	9.8	9.0	8.5	8.0	7.7	7.5	7.0
	13.0	11.8	9.0	8.5	8.0	7.7	7.5	7.0
	15.0	13.7	9.0	8.5	8.0	7.7	7.5	7.0
80	-19.8	-20.0	5.9	5.9	5.9	5.9	5.9	5.8
	-18.8	-19.0	6.1	6.1	6.0	6.0	6.0	6.0
	-16.7	-17.0	6.4	6.4	6.8	6.7	6.4	6.4
	-14.7	-15.0	6.8	6.8	7.1	7.1	6.7	6.7
	-12.6	-13.0	7.1	7.1	7.5	7.5	7.1	7.1
	-10.5	-11.0	7.5	7.5	7.6	7.6	7.4	7.4
	-9.5	-10.0	7.7	7.7	7.8	7.8	7.6	7.6
	-8.5	-9.1	7.8	7.8	8.1	8.1	7.8	7.8
	-7.0	-7.6	8.1	8.1	8.4	8.4	8.0	8.0
	-5.0	-5.6	8.4	8.4	8.4	8.4	8.4	8.4
	-3.0	-3.7	8.8	8.8	8.7	8.7	8.7	8.7
	0.0	-0.7	9.3	9.3	9.3	9.3	9.3	8.7
	3.0	2.2	9.8	9.8	9.8	9.7	9.4	8.7
	5.0	4.1	10.2	10.1	10.0	9.7	9.4	8.7
	7.0	6.0	10.5	10.5	10.0	9.7	9.4	8.7
	9.0	7.9	10.8	10.6	10.0	9.7	9.4	8.7
	11.0	9.8	11.2	10.6	10.0	9.7	9.4	8.7
	13.0	11.8	11.3	10.6	10.0	9.7	9.4	8.7
	15.0	13.7	11.3	10.6	10.0	9.7	9.4	8.7

Heating capacity

Unit Size	Outdoor air temp. °CDB	Outdoor air temp. °CWB	Indoor air temp. °CDB 16.0 kW	18.0 kW	20.0 kW	21.0 kW	22.0 kW	24.0 kW
100	-19.8	-20.0	7.4	7.4	7.3	7.3	7.3	7.3
	-18.8	-19.0	7.6	7.6	7.6	7.5	7.5	7.5
	-16.7	-17.0	8.0	8.0	8.0	8.0	8.0	8.0
	-14.7	-15.0	8.5	8.5	8.4	8.4	8.4	8.4
	-12.6	-13.0	8.9	8.9	8.9	8.9	8.9	8.8
	-10.5	-11.0	9.4	9.3	9.3	9.3	9.3	9.3
	-9.5	-10.0	9.6	9.6	9.5	9.5	9.5	9.5
	-8.5	-9.1	9.8	9.8	9.7	9.7	9.7	9.7
	-7.0	-7.6	10.1	10.1	10.1	10.1	10.1	10.0
	-5.0	-5.6	10.6	10.5	10.5	10.5	10.5	10.5
	-3.0	-3.7	11.0	11.0	10.9	10.9	10.9	10.9
	0.0	-0.7	11.6	11.6	11.6	11.6	11.6	10.9
	3.0	2.2	12.3	12.3	12.2	12.1	11.7	10.9
	5.0	4.1	12.7	12.7	12.5	12.1	11.7	10.9
	7.0	6.0	13.1	13.1	12.5	12.1	11.7	10.9
	9.0	7.9	13.5	13.3	12.5	12.1	11.7	10.9
	11.0	9.8	14.0	13.3	12.5	12.1	11.7	10.9
	13.0	11.8	14.1	13.3	12.5	12.1	11.7	10.9
	15.0	13.7	14.1	13.3	12.5	12.1	11.7	10.9
125	-19.8	-20.0	9.4	9.4	9.4	9.4	9.4	9.3
	-18.8	-19.0	9.7	9.7	9.7	9.7	9.6	9.6
	-16.7	-17.0	10.3	10.3	10.2	10.2	10.2	10.2
	-14.7	-15.0	10.9	10.8	10.8	10.8	10.8	10.7
	-12.6	-13.0	11.4	11.4	11.4	11.4	11.3	11.3
	-10.5	-11.0	12.0	12.0	11.9	11.9	11.9	11.9
	-9.5	-10.0	12.3	12.2	12.2	12.2	12.2	12.2
	-8.5	-9.1	12.5	12.5	12.5	12.5	12.4	12.4
	-7.0	-7.6	13.0	12.9	12.9	12.9	12.9	12.8
	-5.0	-5.6	13.5	13.5	13.5	13.4	13.4	13.4
	-3.0	-3.7	14.1	14.0	14.0	14.0	14.0	13.9
	0.0	-0.7	14.9	14.9	14.8	14.8	14.8	13.9
	3.0	2.2	15.7	15.7	15.7	15.5	15.5	13.9
	5.0	4.1	16.3	16.2	16.0	15.5	15.0	13.9
	7.0	6.0	16.8	16.8	16.0	15.5	15.0	13.9
	9.0	7.9	17.3	17.0	16.0	15.5	15.0	13.9
	11.0	9.8	17.9	17.0	16.0	15.5	15.0	13.9
	13.0	11.8	18.1	17.0	16.0	15.5	15.0	13.9
	15.0	13.7	18.1	17.0	16.0	15.5	15.0	13.9

Refer to Outdoor Unit Capacity Tables : on page 342~, for the actual performance data of each indoor and outdoor unit combination.

8. Fan Performances

8.1 50Hz

FXMQ40 · 50 · 63MA

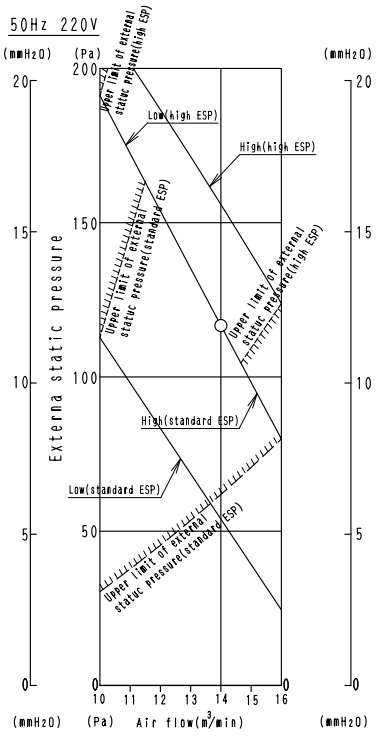

C : 3D019610B-5

FXMQ80MA

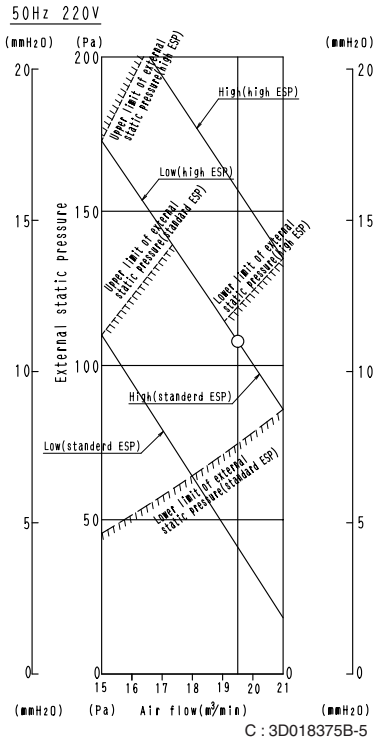

C : 3D018375B-5

FXMQ100MA

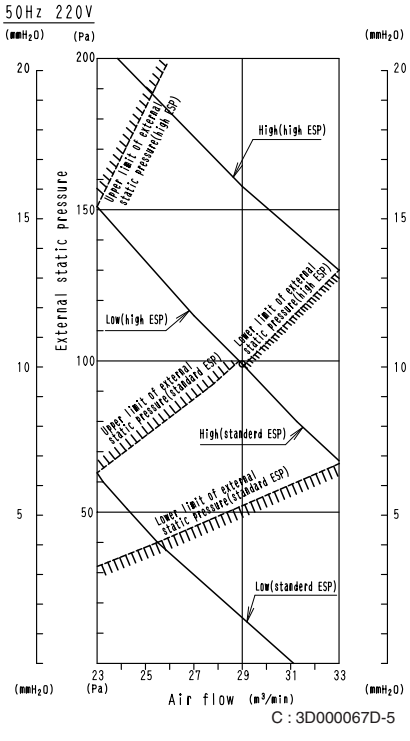

C : 3D000067D-5

FXMQ125MA

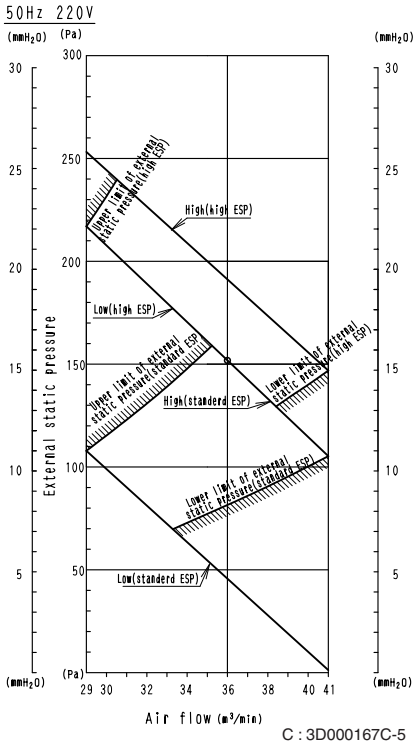

C : 3D000167C-5

Note:

1. The remote controller can be used to switch between “high” and “low”.
2. The air flow is set to “standard” before leaving the factory. It is possible to switch between “standard ESP” and “high ESP” by changing the switch in the indoor unit electrical box.

8.2 60Hz

FXMQ40 · 50 · 63MA

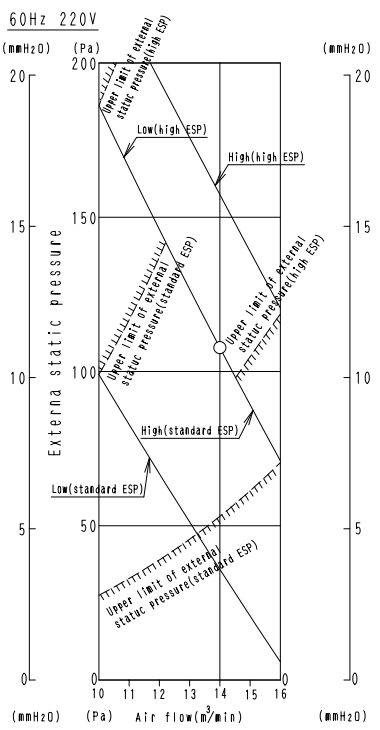

C : 3D019610B-6

FXMQ80MA

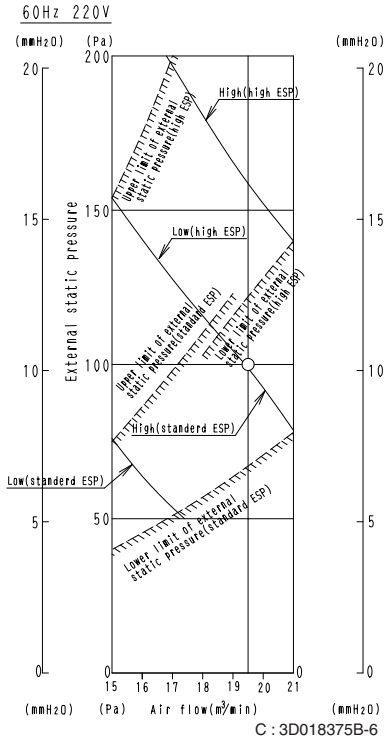

C : 3D018375B-6

FXMQ100MA

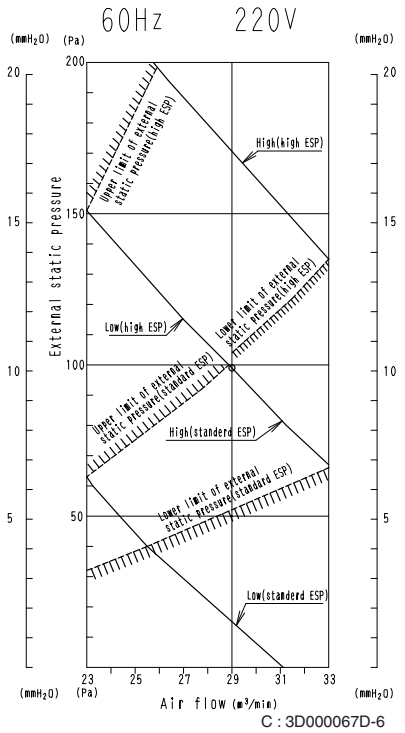

C : 3D000067D-6

FXMQ125MA

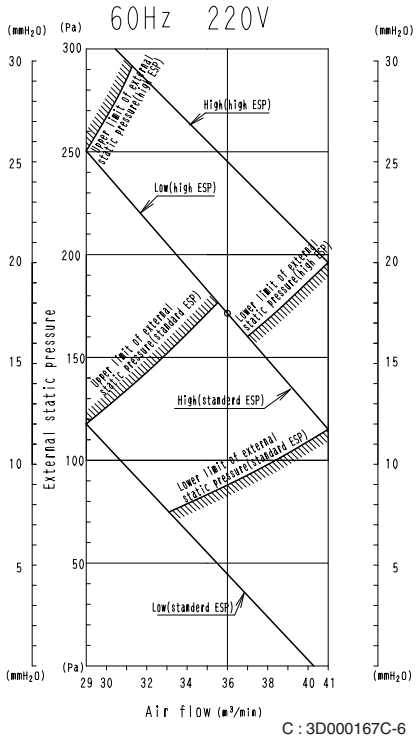

C : 3D000167C-6

Note:

1. The remote controller can be used to switch between “high” and “low”.
2. The air flow is set to “standard” before leaving the factory. It is possible to switch between “standard ESP” and “high ESP” by changing the switch in the indoor unit electrical box.

9. Sound Levels

Overall

■ **Ceiling Mounted Duct Type**

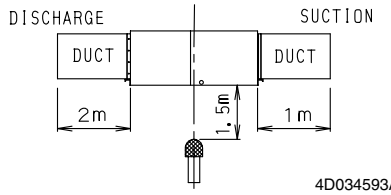

dBA

Model	220V, 50/60Hz		240V, 50Hz	
	H	L	H	L
FXMQ40MA FXMQ50MA FXMQ63MA	39	35	41	37
FXMQ80MA	42	38	44	40
FXMQ100MA	43	39	45	41
FXMQ125MA	45	42	47	44

Note:
1. The operating conditions are assumed to be standard (JIS conditions).
2. These operating values were obtained in a dead room (conversion values).
   Sound level will vary depending on a range of factors such as the construction (acoustic absorption coefficient) of the particular room in which the equipments installed.

Octave Band Level

○——○ 220V 50/60Hz
○- - - -○ 240V 50Hz

FXMQ40 · 50 · 63MAVE

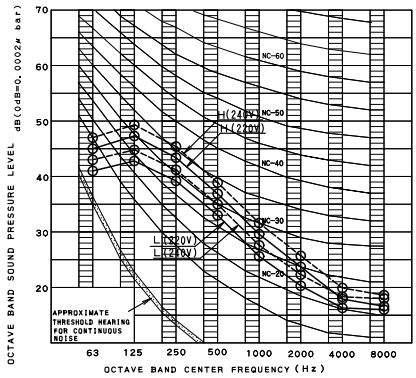

C : 4D034593A

FXMQ80MAVE

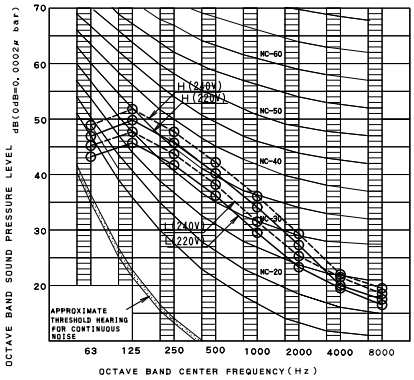

C : 4D034594A

FXMQ100MAVE

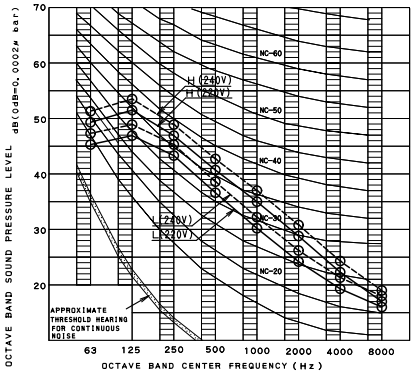

C : 4D034595A

FXMQ125MAVE

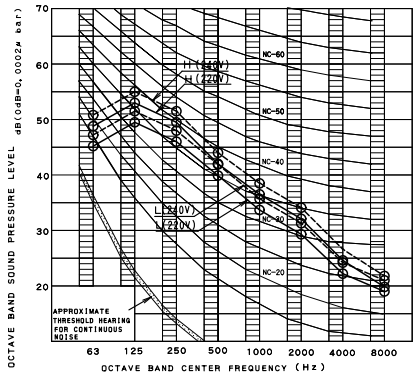

C : 4D034596

10. Installation

Installation Example

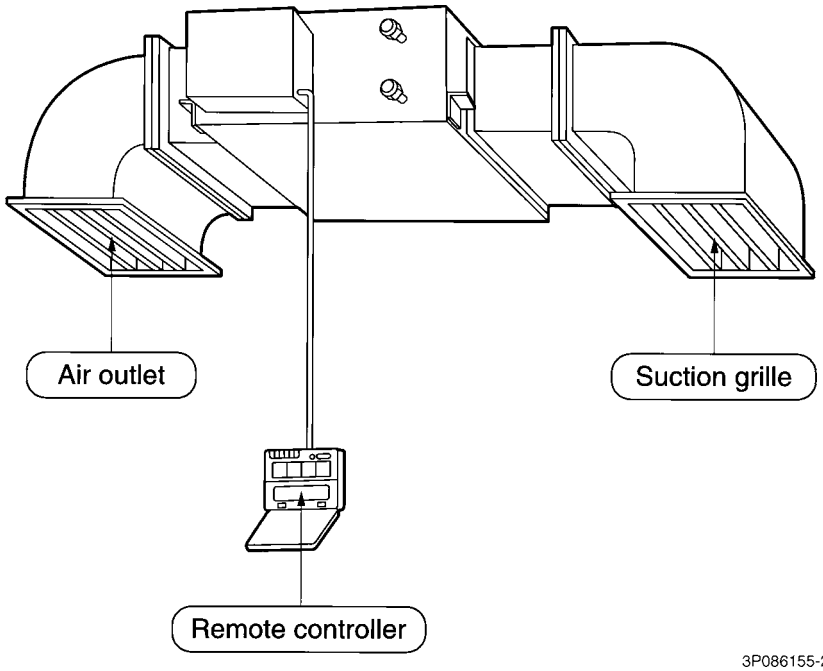

3P086155-2B

Center of Gravity

FXMQ40~125MA

Unit (mm)

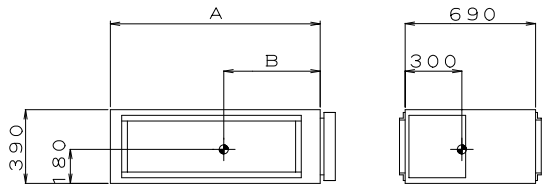

	A	B
FXMQ40・50・63・80MAVE	720	290
FXMQ100・125MAVE	1110	510

C : 4D040333

Service Space

Please attach additional thermal insulation material to the unit body when it is believed that the relative humidity in the ceiling exceeds 80%. Use glass wool, polyethylene foam, or similar with a thickness of 10 mm or more as thermal insulation material.

(1) Select an installation site where the following conditions are fulfilled and that meets with your customer's approval.

- In the upper space (including the back of the ceiling) of the indoor unit where there is no possible dripping of water from the refrigerant pipe, drain pipe, water pipe, etc.
- Where optimum air distribution can be ensured.
- Where nothing blocks the air passage.
- Where condensate can be properly drained.
- If supporting structural members are not strong enough to take the unit's weight, the unit could fall out of place and cause serious injury.
- Where the false ceiling is not noticeably on an incline.
- Where there is no risk of flammable gas leakage.
- Where sufficient clearance for maintenance and service can be ensured. **(Refer to Fig. 1)**
- Where piping between indoor and outdoor units is possible within the allowable limit. (Refer to the installation manual of the outdoor unit.)

CAUTION

- Install the indoor and outdoor units, power supply wiring and connecting wires at least 1 meter away from televisions or radios in order to prevent image interference or noise.
  (Depending on the radio waves, a distance of 1 meter may not be sufficient enough to eliminate the noise.)

(2) Use suspension bolts for installation. Check whether the ceiling is strong enough to support the weight of the unit or not. If there is a risk, reinforce the ceiling before installing the unit.

〈FXMQ40 · 50 · 63 · 80 · 100 · 125M(A)VE〉

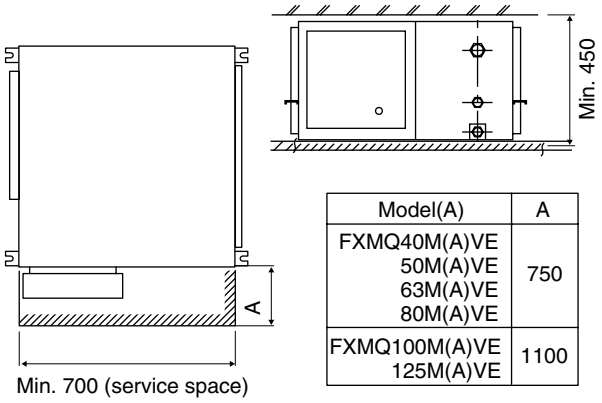

Model(A)	A
FXMQ40M(A)VE 50M(A)VE 63M(A)VE 80M(A)VE	750
FXMQ100M(A)VE 125M(A)VE	1100

Fig. 1

C : 3P086156-6U

Note:

Above figure means minimum value. Please keep these value at least.

Bolt Pitch

(1) Relative positions of indoor unit and suspension bolt. **(Refer to Fig. 2)**

〈FXMQ40 · 50 · 63 · 80 · 100 · 125M(A)VE〉

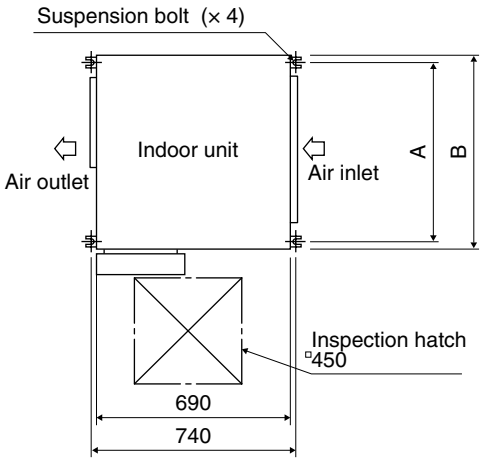

Model	A	B
FXMQ40M(A)VE 50M(A)VE 63M(A)VE 80M(A)VE	670	720
FXMQ100M(A)VE 125M(A)VE	1060	1110

Fig. 2

(length : mm)

(2) Install a canvass duct to the air discharge outlet and air inlet so that vibration from the machine body isn't transmitted to the duct or ceiling.
You should also apply acoustic (insulation material) to the inside of the duct, and vibration insulation rubber to the suspension bolts.

(3) Install suspension bolts. (Use bolts of 10 mm diameter.)
- Install the equipment where supporting structures are strong enough to bear the equipment's weight. Use embedded inserts or anchor bolts with new buildings and hole-in-anchors with old buildings.

〈Installation example〉

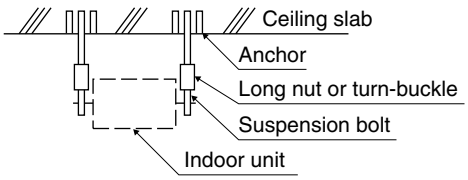

Note) All the above parts are field supplied.

C : 3P086156-6U

Drain Piping Work

〈〈**Rig the drain pipe as shown below and take measures against condensation. Improperly rigged piping could lead to leaks and eventually wet furniture and belongings.**〉〉
〈〈**Insulate the drain hose inside the building.**〉〉

(1) Carry out the drain piping.

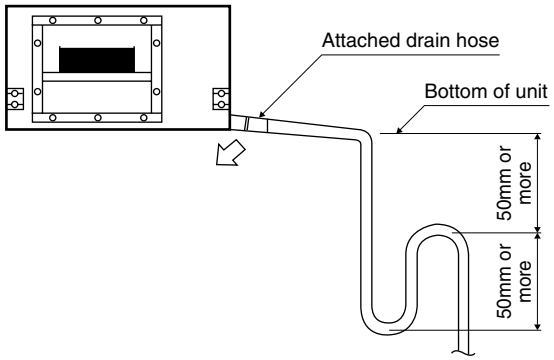

- Keep piping as short as possible and slope it downwards so that air may not remained trapped inside the pipe.
- Keep pipe size equal to or greater than that of the connecting pipe (Vinyl pipe of 25 mm nominal diameter and 32 mm outer diameter).
- Use the attached drain hose and clamp.
  Tighten the clamp firmly.
- Insulate the clamp metal with the sealing pad.

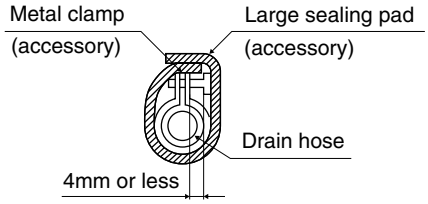

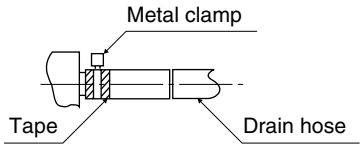

- **There is negative pressure inside the unit relative to atmospheric pressure when the unit is running, so be sure to provide drain flap on the drain outlet. (See the figure)**
- **In order to prevent foreign matter from building up inside the piping, you should avoid curves as much as possible, and arrange so the trap can be cleaned.**

NOTE

- If converging multiple drain pipes, install according to the procedure shown below. (Install a drain trap for each indoor unit.)

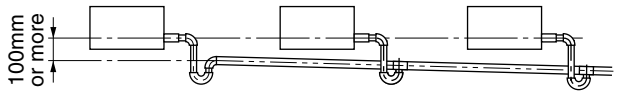

(2) After piping work is finished, check drainage flows smoothly.
- Add approximately 1 liter of water slowly from the air inlet and check drainage flow.

CAUTION

- Drain piping connections
  Do not connect the drain piping directly to sewage pipes that smell of ammonia. The ammonia in the sewage might enter the indoor unit through the drain pipes and corrode the heat exchanger.

C : 3P086156-6U

11. Accessories

Standard Accessories

FXMQ40~125MA

Name	Metal clamp	Drain hose	Insulation for fitting	Sealing pad	Clamp	Screws for duct flanges	
Quantity	1 pc.	1 pc.	1 each.	1 each.	6 pcs.	As described in table below	(Other) • Operation manual • Installation manual • Washers (8 pcs.)
Shape			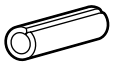 for liquid pipe  for gas pipe	 Large 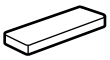 Small		 FXMQ40·50·63·80M(A)VE: 16 FXMQ100·125M(A)VE: 28	

FXMQ200 · 250MA

Name	Attached piping (1)	(Other)
Quantity	1 set	• Operation manual • Installation manual • Screws for flange connection (M5) (48 pcs.) • Insulation material (for hanger)(2 pcs.) • Washers (8 pcs.) • Clamps (2 pcs.) • Hexagon head bolt for pipe flange (M10) (2 pcs.) • Spring washer for pipe flange (M10) (2 pcs.)
Shape	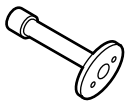	

C : 3P086156-6U

Optional Accessories (For Unit)

Item \ Type		FXMQ40MA	FXMQ50MA	FXMQ63MA	FXMQ80MA	FXMQ100MA	FXMQ125MA
Drain pump kit		KDU-30L125VE					
High efficiency filter	65%	KAFP372A80				KAFP372A160	
	90%	KAFP373A80				KAFP373A160	
Filter chamber		KDDFP37A80				KDDFP37A160	
Long life replacement filter		KAFP371A80				KAFP371A160	

C : 3D034598B

Optional Accessories (For Controls) : Refer to P.375

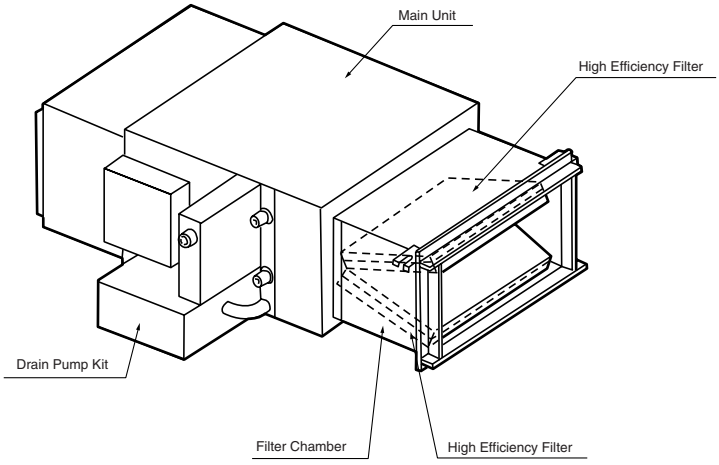

(V0680)

High Efficiency Filter

Specification

Model	65% type				90% type			
Items	KAFP372A80		KAFP372A160		KAFP373A80		KAFP373A160	
Filter Chamber	KDDFP37A80		KDDFP37A160		KDDFP37A80		KDDFP37A160	
Dimension (W×D×T) (mm)	355×305×44		550×305×44		355×305×44		550×305×44	
Average Dust Collection Efficiency (%)	Colorimetric method 65%				Colorimetric method 90%			
Initial Pressure Loss (Pa)	18	35	26	38	28	54	36	56
Final Pressure Loss (Pa)	98				98			
Filter	Non-woven fabric of synthetic fiber				Non-woven fabric of synthetic fiber			
Life Time (h)	2500 hours (dust density 0.15mg/m³)				1800 hours (dust density 0.15mg/m³)			
Seats Structured	2		2		2		2	
Applicable Models	40 Class	50·63·80 Class	100 Class	125 Class	40 Class	50·63·80 Class	100 Class	125 Class

Note:
The filter chamber is separately required when the high efficiency filter will be installed.

Dimensions

Unit:mm

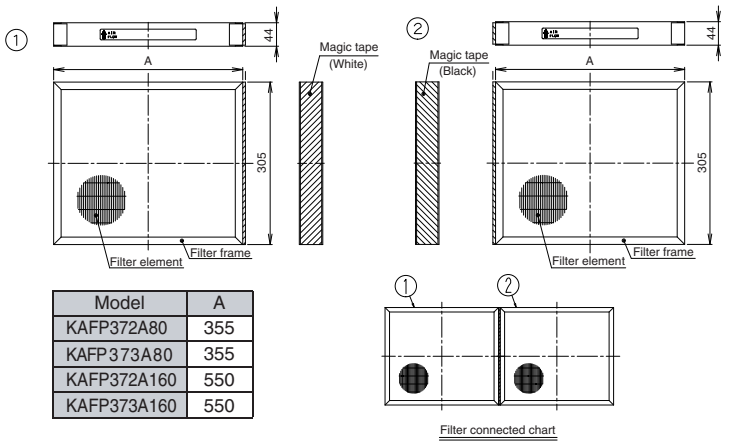

Model	A
KAFP372A80	355
KAFP373A80	355
KAFP372A160	550
KAFP373A160	550

Installation

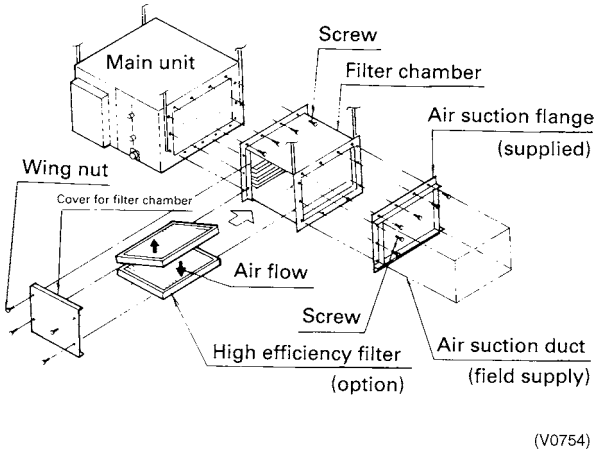

(V0754)

- Meet the airflow direction and arrow mark putting on the High efficiency filter.
- It is impossible to be built in with the air cleaning unit together.

Characteristics of filter

■KAFP372A80, KAFP372A160, KAFP373A80, KAFP373A160, KDDFP37A80, KDDFP37A160

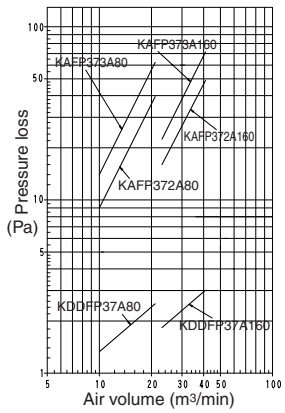

Long Life Replacement Filter

Specifications

Item \ Model		KAFP371A80	KAFP371A160
Filter Chamber for Bottom Suction		KDDFP37A80	KDDFP37A160
Dimensions (W×D×T) mm		358.5×305×25	553.5×305×25
Average Efficiency (%)		50% (Gravity method)	
Pressure Loss (Pa)	Initial	7	8
	Final	49 (5mmH_2O)	
Material		Mildew Proof Resin Net	
Number Required per Unit		2	2
Life Time (h)		2,500 h (dust particle concentration at 0.15mg/m³)	
Applicable Model		40·50·63·80 Class	100·125 Class

Dimensions

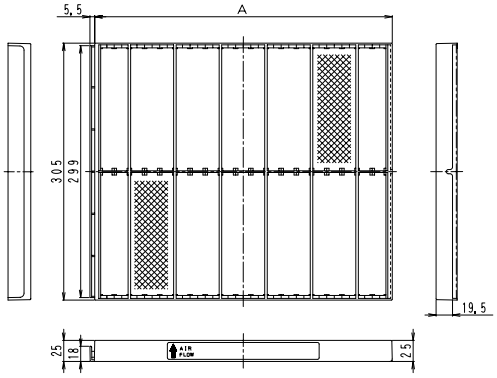

Model	A	Quantity
KAFP371A80	353	2
KAFP371A160	548	2

Note:
The filter chamber is required when the long life filter will be installed.

Characteristics of filter

■KAFP371A80, KAFP371A160,
KDDFP37A80, KDDFP37A160

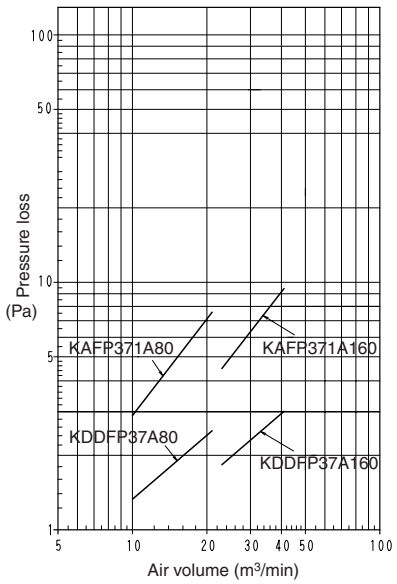

Drain Pump Kit

Dimensions

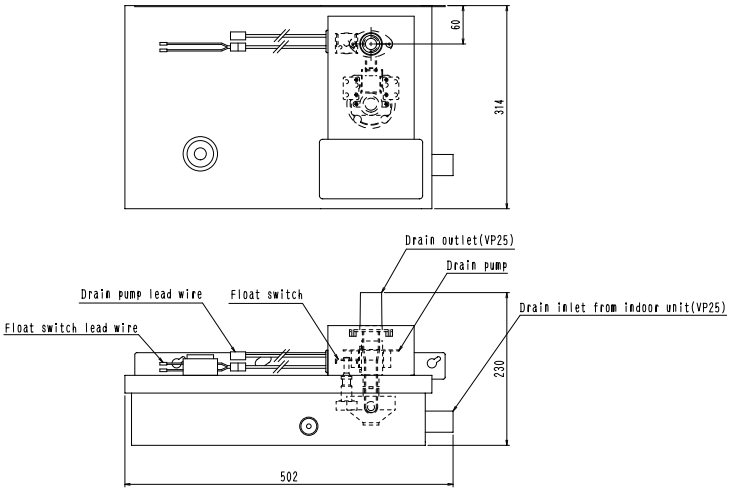

Specification

Items \ Model	KDU-30L125VE
Power Supply	Single phase 220-240V/220V 50/60Hz
Power Consumption (W)	12/11 (50/60Hz)
Drain-up Lift (mm)	Standard drain outlet of the unit +300~+750
Drain Outlet	VP25 (Internal diameter ϕ25, external diameter ϕ32)
Safety Device	Float switch
Weight (kg)	5.8
Applied Models	40 · 50 · 63 · 80 · 100 · 125 Class

Installation Space

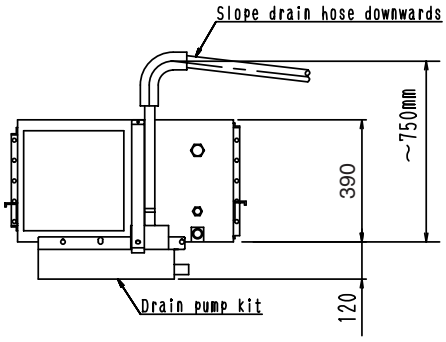

Provide a inspection hatch in a postion whitch makes it easy to service the indoor unit and drain pump kit.
(See the service space for the indoor unit)
Refer to the installation manual provided with the indoor unit.

If the drain pump kit has already been installed, note the following points when installing the indoor unit.

· Do not install the indoor unit on an incline against drainage flow (away from the drain outlet). This can lead to water leaks.

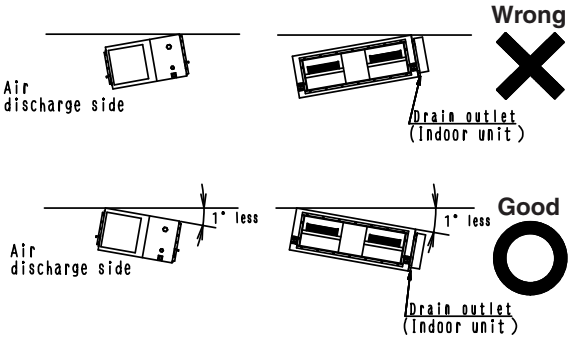

Internal Wiring Method

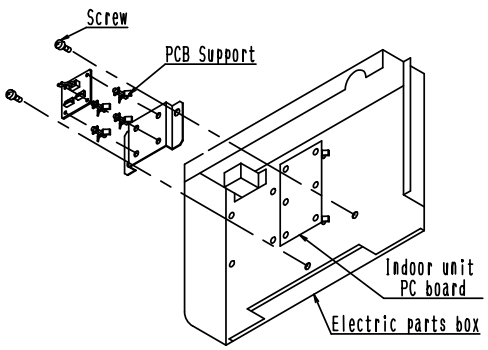

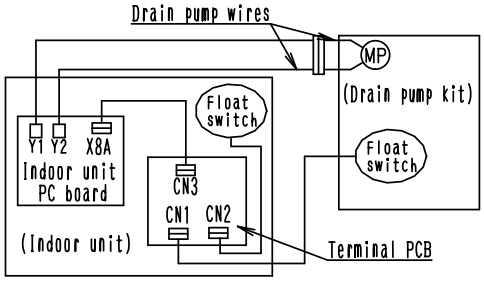

Dimensions with the Optional Accessories

High efficiency filter (Long life filter)

■ **FXMQ40~80MA**

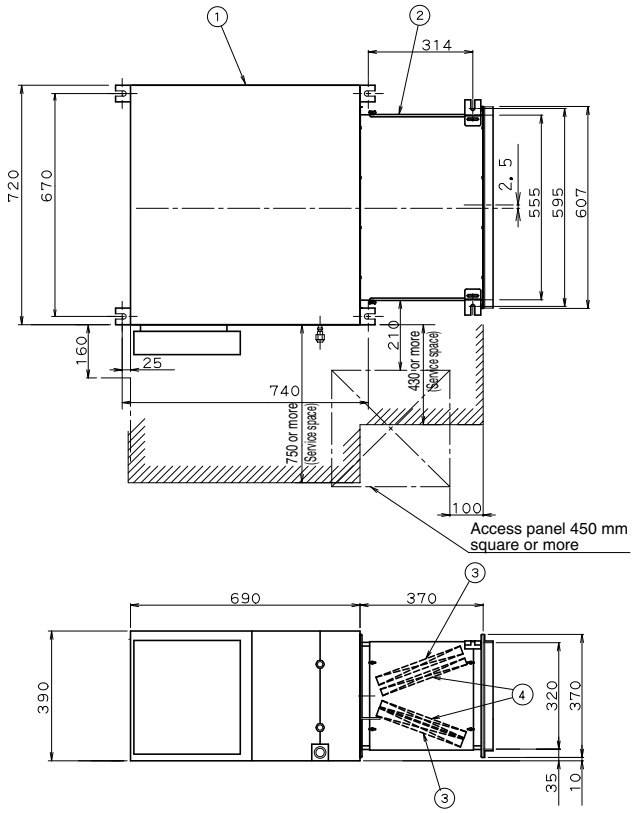

Note)
1. Be sure to provide an air filter in the suction air duct (with dust collection efficiency by more than 50% in the weight method.)
2. Be sure to install a drain trap in the drain piping because the outlet of drain will fall to negative pressure.
3. when a central drain system will be applied, each indoor unit should have a drain trap individually.

Number	Name	Description
4	Long life filter	
3	High efficiency filter	
2	Filter chamber	
1	Ceiling mounted duct type 's body	

JC : DU824-202N

■ **FXMQ100 · 125MA**

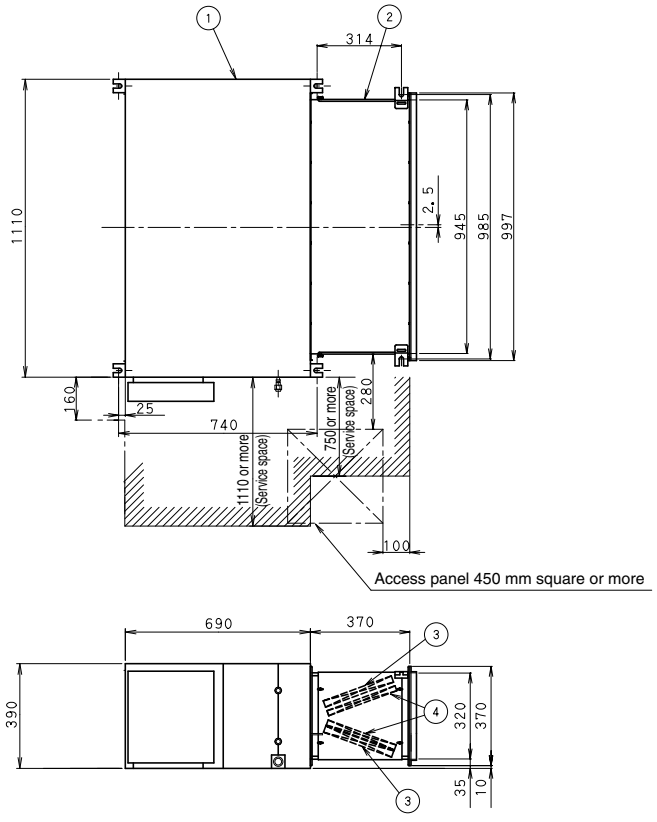

Note)
1. Be sure to provide an air filter in the suction air duct (with dust collection efficiency by more than 50% in the weight method.)
2. Be sure to install a drain trap in the drain piping because the outlet of drain will fall to negative pressure.
3. when a central drain system will be applied, each indoor unit should have a drain trap individually.

Number	Name	Description
4	Long life filter	
3	High efficiency filter	
2	Filter chamber	
1	Ceiling mounted duct type 's body	

JC : DU827-244N

FXHQ-MA
Ceiling Suspended Type

1. Features 222
2. Specifications 223
3. Dimensions 224
4. Piping Diagrams 227
5. Wiring Diagrams 228
6. Electric Characteristics 229
7. Capacity Tables 230
   7.1 Cooling Capacity 230
   7.2 Heating Capacity 231
8. Air Velocity and Temperature Distributions (Reference Data) 232
9. Sound Levels 233
10. Installation 234
11. Accessories 237

8

1. Features

External Appearance



Slim body with quieter and wider air flow

●Adoption of newly designed QUIET STREAM FAN

Uses the new quiet stream fan and many more quiet technologies.

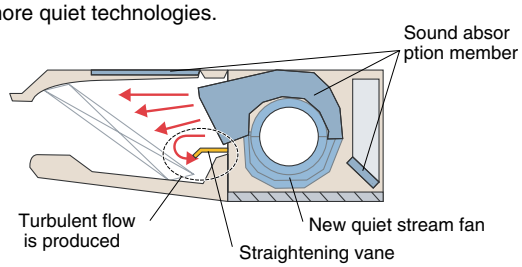

●Low operating sound

(dB(A))

Class	32	63	100
Operating sound (H/L)	36/31	39/34	45/37

●Installation is easy

- Drain-up kit (optional) can be easily incorporated

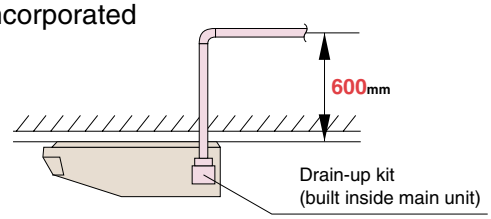

●Wide air discharge openings produce a spreading 100˚ air flow

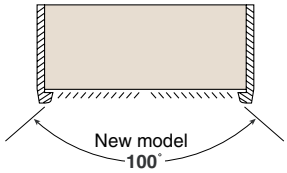



●Maintenance is easy

- New Non-dew Frap with no implanted

Bristle-free Frap minimizes contamination and makes cleaning simpler.

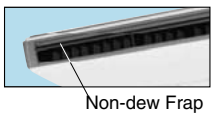

- Easy to clean flat design
- Maintenance is easier because everything can be performed from below the unit
- A long-life filter (maintenance free up to one year) is equipped as standard

2. Specifications

Ceiling Suspended Type

Model			FXHQ32MAVE	FXHQ63MAVE	FXHQ100MAVE
∗1 Cooling Capacity (19.5°CWB)		kcal/h	3,200	6,300	10,000
		Btu/h	12,600	24,900	39,600
		kW	3.7	7.3	11.6
∗2 Cooling Capacity (19.0°CWB)		kW	3.6	7.1	11.2
∗3 Heating Capacity		kcal/h	3,400	6,900	10,800
		Btu/h	13,600	27,300	42,700
		kW	4.0	8.0	12.5
Casing Color			White (10Y9/0.5)	White (10Y9/0.5)	White (10Y9/0.5)
Dimensions: (H×W×D)		mm	195×960×680	195×1,160×680	195×1,400×680
Coil (Cross Fin Coil)	Rows×Stages×Fin Pitch	mm	2×12×1.75	3×12×1.75	3×12×1.75
	Face Area	m²	0.182	0.233	0.293
Fan	Model		3D12K1AA1	4D12K1AA1	3D12K2AA1
	Type		Sirocco Fan	Sirocco Fan	Sirocco Fan
	Motor Output × Number of Units	W	62×1	62×1	130×1
	Air Flow Rate (H/L)	m³/min	12/10	17.5/14	25/19.5
		cfm	424/353	618/494	883/688
	Drive		Direct Drive	Direct Drive	Direct Drive
Temperature Control			Microprocessor Thermostat for Cooling and Heating	Microprocessor Thermostat for Cooling and Heating	Microprocessor Thermostat for Cooling and Heating
Sound Absorbing Thermal Insulation Material			Glass Wool	Glass Wool	Glass Wool
Air Filter			Resin Net (with Mold Resistant)	Resin Net (with Mold Resistant)	Resin Net (with Mold Resistant)
Piping Connections	Liquid Pipes	mm	ϕ6.4 (Flare Connection)	ϕ9.5 (Flare Connection)	ϕ9.5 (Flare Connection)
	Gas Pipes	mm	ϕ12.7 (Flare Connection)	ϕ15.9 (Flare Connection)	ϕ15.9 (Flare Connection)
	Drain Pipe	mm	VP20 (External Dia. 26 Internal Dia. 20)	VP20 (External Dia. 26 Internal Dia. 20)	VP20 (External Dia. 26 Internal Dia. 20)
Machine Weight (Mass)		kg	24	28	33
∗5 Sound Level (H/L) (220-240V)		dBA	36/31	39/34	45/37
Safety Devices			Fuse. Thermal Protector for Fan Motor.	Fuse. Thermal Protector for Fan Motor.	Fuse. Thermal Protector for Fan Motor.
Refrigerant Control			Electronic Expansion Valve	Electronic Expansion Valve	Electronic Expansion Valve
Connectable Outdoor Unit			R-410A P Series	R-410A P Series	R-410A P Series
Standard Accessories			Operation Manual. Installation Manual. Paper Pattern for Installation. Drain Hose. Clamp Metal. Insulation for Fitting. Clamps. Washers.	Operation Manual. Installation Manual. Paper Pattern for Installation. Drain Hose. Clamp Metal. Insulation for Fitting. Clamps. Washers.	Operation Manual. Installation Manual. Paper Pattern for Installation. Drain Hose. Clamp Metal. Insulation for Fitting. Clamps. Washers.
Drawing No.			C : 3D038815A		

Note:

∗1 Indoor temp. : 27°CDB, 19.5°CWB / outdoor temp. : 35°CDB / Equivalent piping length : 7.5 m, level difference : 0 m.
∗2 Indoor temp. : 27°CDB, 19.0°CWB / outdoor temp. : 35°CDB / Equivalent piping length : 7.5 m, level difference : 0 m.
∗3 Indoor temp. : 20°CDB / outdoor temp. : 7°CDB, 6°CWB / Equivalent piping length : 7.5 m, level difference : 0 m.
4 Capacities are net, including a deduction for cooling (an addition for heating) for indoor fan motor heat.
∗5 Anechoic chamber conversion value, measured at a point 1 m in front of the unit and 1 m downward. During actual operation, these values are normally somewhat higher as a result of ambient conditions.
6 Refer to page 229 for Fan Motor Input.

Conversion Formulae
kcal/h=kW×860 Btu/h=kW×3412 cfm=m³/min×35.3

8

3. Dimensions

FXHQ32MA

Unit (mm)

3D038855

Number	Name	Description
1	Air discharge grille	
2	Air suction grille	
3	Air filter	
4	Gas pipe connection	φ12.7flare
5	Liquid pipe connection	φ6.4flare
6	Drain pipe connection	VP20
7	Earth terminal (Inside the electric components box)	M4
8	Suspention bracket	
9	Backward piping and wiring connection opening lid	
10	Upward piping and wiring connection opening lid	
11	Right side pipe connection	Slit hole
12	Left back drain pipe connection	Slit hole
13	Left side drain pipe connection	Slit hole
14	Right side drain pipe connection	Slit hole
15	Hole of wall for taking out in piping back	φ100
16	Upward drain pipe connection	φ60
17	Upward gas pipe connection	φ36
18	Upward liquid pipe connection	φ26

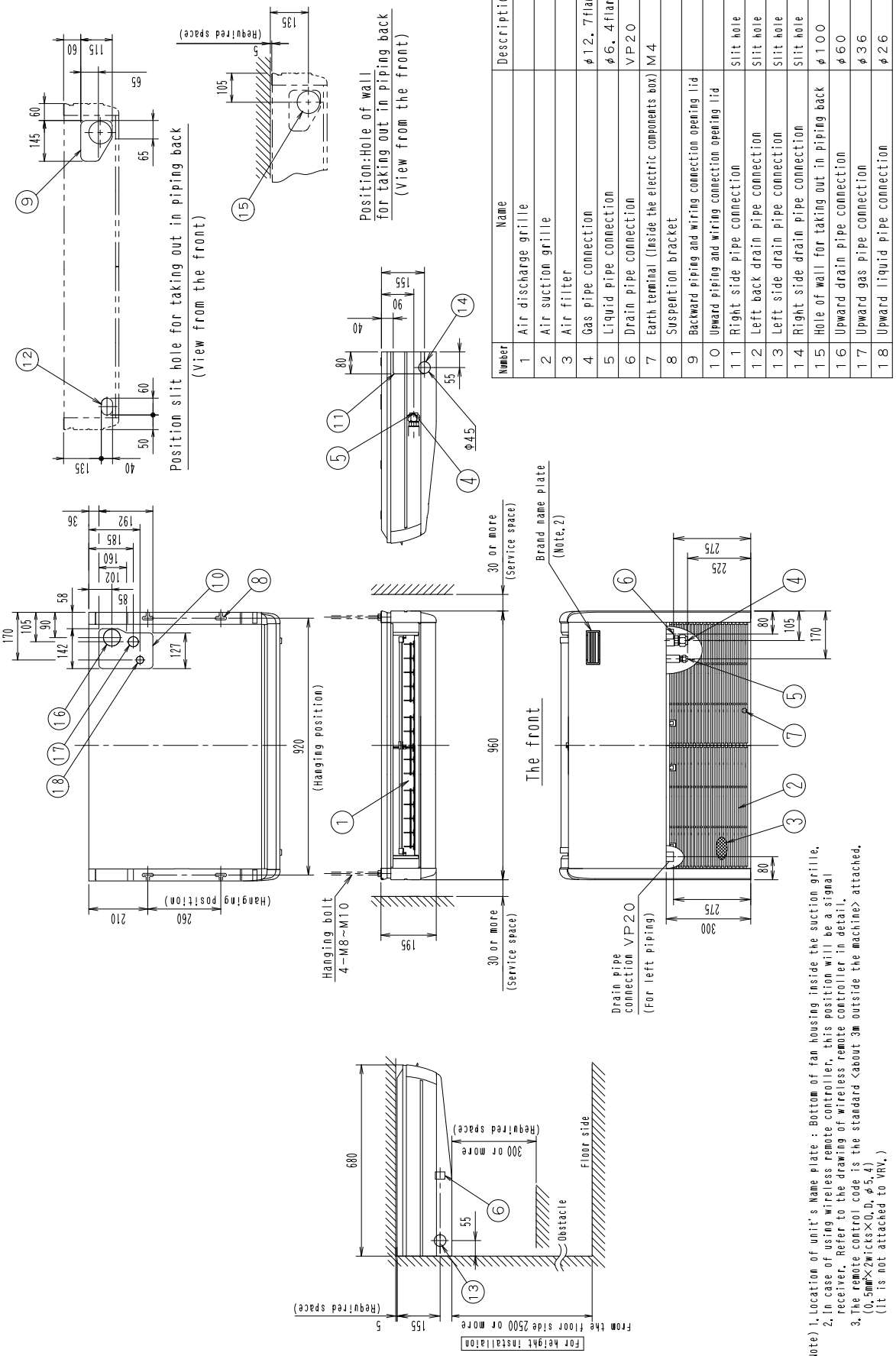

Note) 1. Location of unit's Name plate : Bottom of fan housing inside the suction grille.
2. In case of using wireless remote controller, this position will be a signal receiver. Refer to the drawing of wireless remote controller in detail.
3. The remote control code is the standard <about 3m outside the machine> attached. (0.5mm²×2wicks×Q, D, φ5.4)
(It is not attached to VAV.)

FXHQ63MA

Unit (mm)

3D038856

Number	Name	Description
1	Air discharge grille	
2	Air suction grille	
3	Air filter	
4	Gas pipe connection	φ15.9flare
5	Liquid pipe connection	φ9.5flare
6	Drain pipe connection	VP20
7	Earth terminal (Inside the electric components box)	M4
8	Suspention bracket	
9	Backward piping and wiring connection opening lid	
10	Upward piping and wiring connection opening lid	
11	Right side pipe connection	Slit hole
12	Left back drain pipe connection	Slit hole
13	Left side drain pipe connection	Slit hole
14	Right side drain pipe connection	Slit hole
15	Hole of wall for taking out in piping back	φ100
16	Upward drain pipe connection	φ60
17	Upward gas pipe connection	φ36
18	Upward liquid pipe connection	φ26

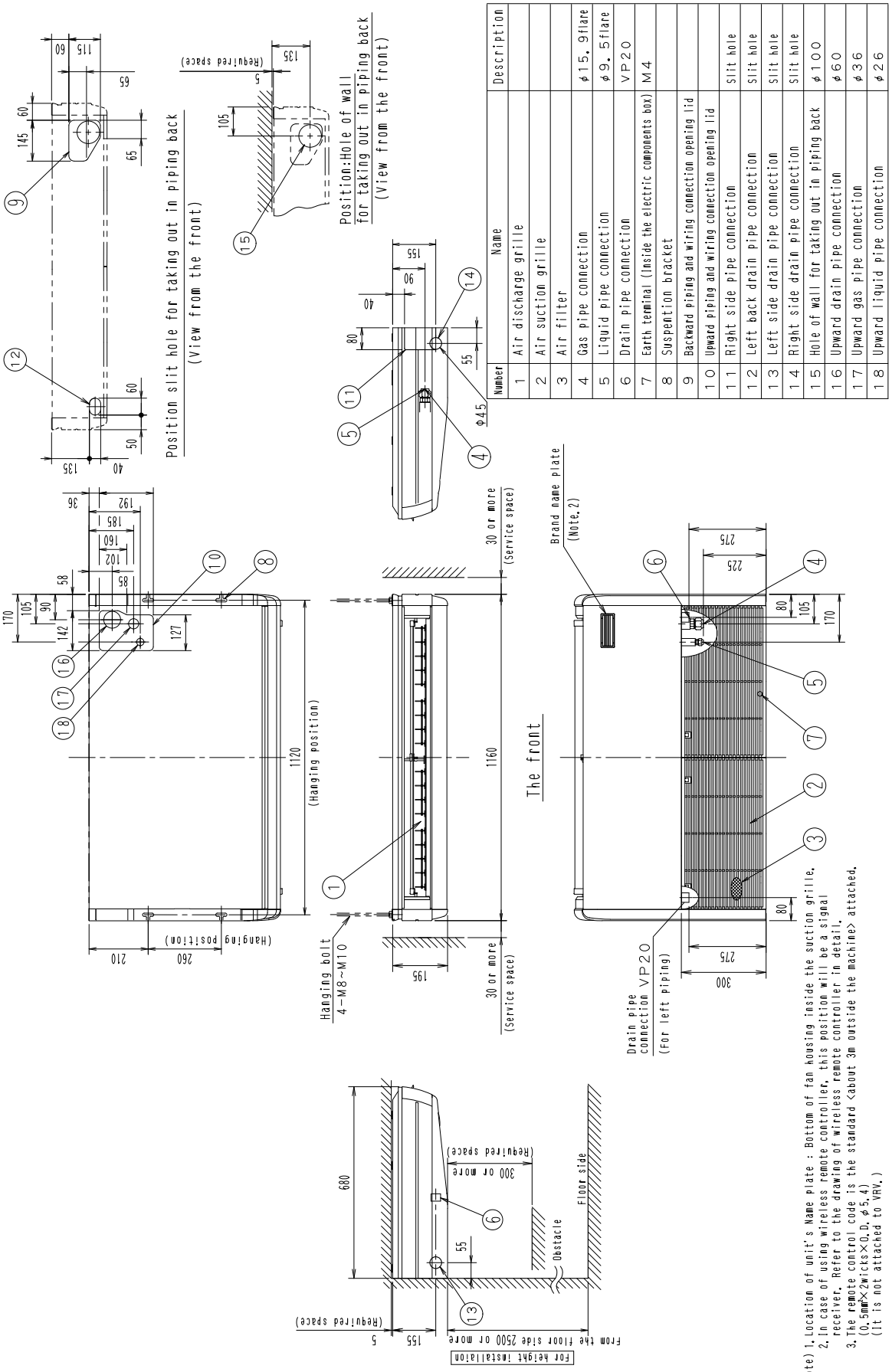

FXHQ100MA

Unit (mm)

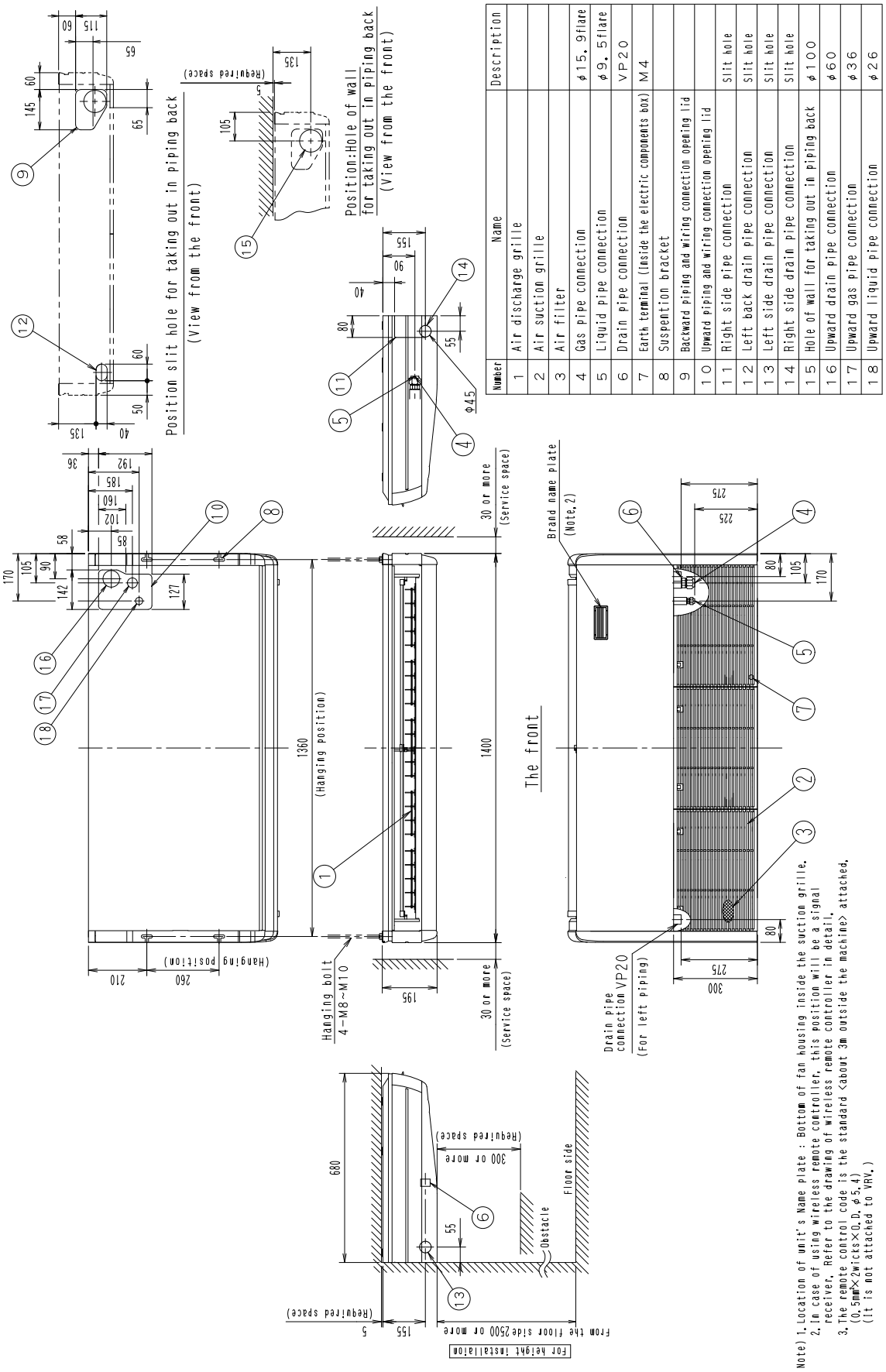

Number	Name	Description
1	Air discharge grille	
2	Air suction grille	
3	Air filter	
4	Gas pipe connection	φ15.9flare
5	Liquid pipe connection	φ9.5flare
6	Drain pipe connection	VP20
7	Earth terminal (Inside the electric components box)	M4
8	Suspention bracket	
9	Backward piping and wiring connection opening lid	
10	Upward piping and wiring connection opening lid	
11	Right side pipe connection	Slit hole
12	Left back drain pipe connection	Slit hole
13	Left side drain pipe connection	Slit hole
14	Right side drain pipe connection	Slit hole
15	Hole of wall for taking out in piping back	φ100
16	Upward drain pipe connection	φ60
17	Upward gas pipe connection	φ36
18	Upward liquid pipe connection	φ26

Note) 1. Location of unit's Name plate : Bottom of fan housing inside the suction grille.
2. In case of using wireless remote controller, this position will be a signal receiver. Refer to the drawing of wireless remote controller in detail.
3. The remote control code is the standard (about 3m outside the machine) attached. (0.5mm×2wicks×D, φ5.4)
(It is not attached to VRV.)

4. Piping Diagrams

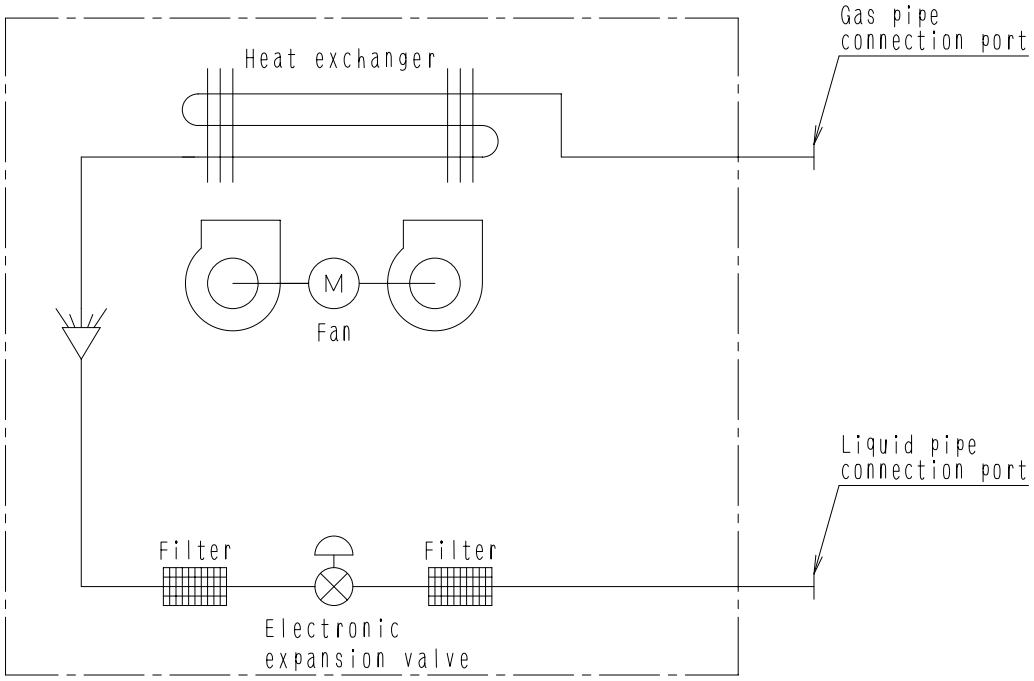

4D034245B

■ **Refrigerant pipe connection port diameters**

(mm)

Model	Gas	Liquid
FXHQ32MA	ϕ12.7	ϕ6.4
FXHQ63 · 100MA	ϕ15.9	ϕ9.5

5. Wiring Diagrams

FXHQ32 · 63 · 100MAVE

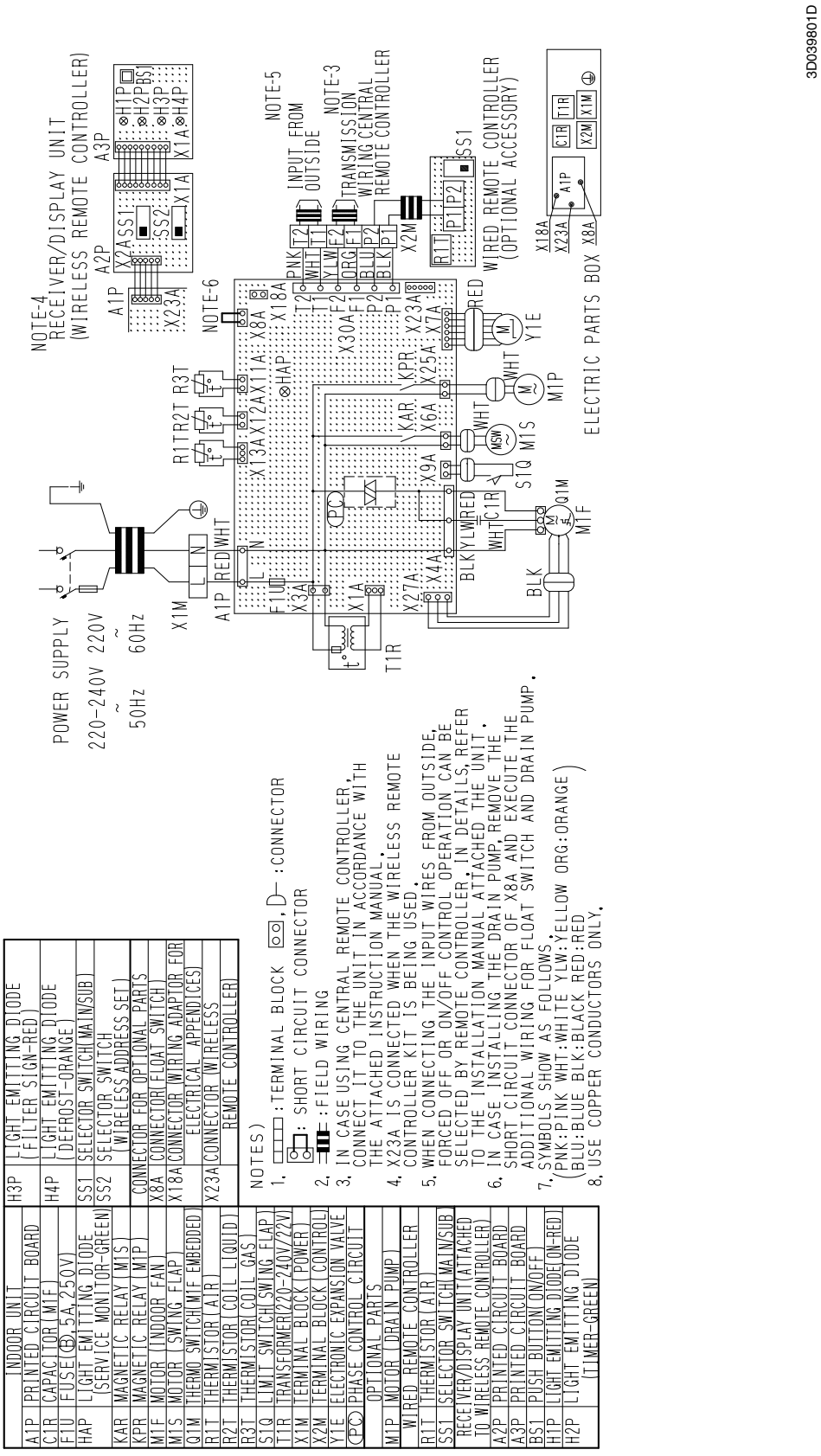

6. Electric Characteristics

Units				Power supply		IFM		Input(W)	
Model	Hz	Volts	Voltage range	MCA	MFA	KW	FLA	Cooling	Heating
FXHQ32MAVE	50	220-240	MAX. 264 Min. 198	0.8	15	0.062	0.6	111	111
FXHQ63MAVE				0.8	15	0.062	0.6	115	115
FXHQ100MAVE				0.9	15	0.130	0.7	135	135
FXHQ32MAVE	60	220	MAX. 242 Min. 198	0.9	15	0.062	0.7	142	142
FXHQ63MAVE				0.9	15	0.062	0.7	145	145
FXHQ100MAVE				1.3	15	0.130	1.0	199	199

Symbols:

MCA : Min. Circuit Amps (A)
MFA : Max. Fuse Amps (See note 5)
KW : Fan Motor Rated Output(KW)
FLA : Full Load Amps(A)
IFM : Indoor Fan Motor

Note:

1. Voltage range

   Units are suitable for use on electrical systems where voltage supplied to unit terminals is not below or above listed range limits.

2. Maximum allowable voltage unbalance between phases is 2%.

3. MCA/MFA

   MCA = 1.25 X FLA

   MFA ≦ 4 X FLA

   (Next lower standard fuse rating. Min. 15A)

4. Select wire size based on the MCA.

5. Instead of fuse, use Circuit Breaker.

C : 4D035304B

7. Capacity Tables

7.1 Cooling Capacity

FXHQ-MA **[50/60Hz]**

Cooling capacity

Unit Size	Outdoor air temp. °CDB	Indoor air temp. 14.0°CWB 20°CDB TC	14.0°CWB 20°CDB SHC	16.0°CWB 23°CDB TC	16.0°CWB 23°CDB SHC	18.0°CWB 26°CDB TC	18.0°CWB 26°CDB SHC	19.0°CWB 27°CDB TC	19.0°CWB 27°CDB SHC	20.0°CWB 28°CDB TC	20.0°CWB 28°CDB SHC	22.0°CWB 30°CDB TC	22.0°CWB 30°CDB SHC	24.0°CWB 32°CDB TC	24.0°CWB 32°CDB SHC
32	10.0	2.4	2.3	2.9	2.6	3.4	2.8	3.6	2.9	3.8	2.9	4.3	3.0	4.7	3.1
	12.0	2.4	2.3	2.9	2.6	3.4	2.8	3.6	2.9	3.8	2.9	4.3	3.0	4.7	3.0
	14.0	2.4	2.3	2.9	2.6	3.4	2.8	3.6	2.9	3.8	2.9	4.3	3.0	4.6	3.0
	16.0	2.4	2.3	2.9	2.6	3.4	2.8	3.6	2.9	3.8	2.9	4.3	3.0	4.6	3.0
	18.0	2.4	2.3	2.9	2.6	3.4	2.8	3.6	2.9	3.8	2.9	4.3	3.0	4.5	2.9
	20.0	2.4	2.3	2.9	2.6	3.4	2.8	3.6	2.9	3.8	2.9	4.3	3.0	4.4	2.9
	21.0	2.4	2.3	2.9	2.6	3.4	2.8	3.6	2.9	3.8	2.9	4.3	3.0	4.4	2.9
	23.0	2.4	2.3	2.9	2.6	3.4	2.8	3.6	2.9	3.8	2.9	4.2	3.0	4.3	2.8
	25.0	2.4	2.3	2.9	2.6	3.4	2.8	3.6	2.9	3.8	2.9	4.2	2.9	4.3	2.8
	27.0	2.4	2.3	2.9	2.6	3.4	2.8	3.6	2.9	3.8	2.9	4.1	2.9	4.2	2.7
	29.0	2.4	2.3	2.9	2.6	3.4	2.8	3.6	2.9	3.8	2.9	4.1	2.9	4.2	2.7
	31.0	2.4	2.3	2.9	2.6	3.4	2.8	3.6	2.9	3.8	2.9	4.0	2.8	4.1	2.7
	33.0	2.4	2.3	2.9	2.6	3.4	2.8	3.6	2.9	3.8	2.9	3.9	2.8	4.0	2.7
	35.0	2.4	2.3	2.9	2.6	3.4	2.8	3.6	2.9	3.7	2.9	3.8	2.8	3.9	2.7
	37.0	2.4	2.3	2.9	2.6	3.4	2.8	3.6	2.9	3.7	2.9	3.8	2.8	3.8	2.6
	39.0	2.4	2.3	2.9	2.6	3.4	2.8	3.6	2.9	3.7	2.9	3.8	2.7	3.8	2.6
63	10.0	4.8	4.1	5.7	4.6	6.6	5.1	7.1	5.2	7.6	5.3	8.5	5.5	9.3	5.6
	12.0	4.8	4.1	5.7	4.6	6.6	5.1	7.1	5.2	7.6	5.3	8.5	5.5	9.2	5.5
	14.0	4.8	4.1	5.7	4.6	6.6	5.1	7.1	5.2	7.6	5.3	8.5	5.5	9.1	5.4
	16.0	4.8	4.1	5.7	4.6	6.6	5.1	7.1	5.2	7.6	5.3	8.5	5.5	9.0	5.3
	18.0	4.8	4.1	5.7	4.6	6.6	5.1	7.1	5.2	7.6	5.3	8.5	5.5	8.8	5.3
	20.0	4.8	4.1	5.7	4.6	6.6	5.1	7.1	5.2	7.6	5.3	8.5	5.5	8.7	5.2
	21.0	4.8	4.1	5.7	4.6	6.6	5.1	7.1	5.2	7.6	5.3	8.5	5.5	8.7	5.2
	23.0	4.8	4.1	5.7	4.6	6.6	5.1	7.1	5.2	7.6	5.3	8.4	5.4	8.5	5.1
	25.0	4.8	4.1	5.7	4.6	6.6	5.1	7.1	5.2	7.6	5.3	8.3	5.4	8.4	5.1
	27.0	4.8	4.1	5.7	4.6	6.6	5.1	7.1	5.2	7.6	5.3	8.1	5.3	8.3	5.0
	29.0	4.8	4.1	5.7	4.6	6.6	5.1	7.1	5.2	7.6	5.3	8.0	5.2	8.2	5.0
	31.0	4.8	4.1	5.7	4.6	6.6	5.1	7.1	5.2	7.6	5.3	7.9	5.1	8.1	4.9
	33.0	4.8	4.1	5.7	4.6	6.6	5.1	7.1	5.2	7.6	5.3	7.8	5.1	7.9	4.9
	35.0	4.8	4.1	5.7	4.6	6.6	5.1	7.1	5.2	7.5	5.3	7.7	5.1	7.8	4.8
	37.0	4.8	4.1	5.7	4.6	6.6	5.1	7.1	5.2	7.4	5.2	7.5	5.0	7.7	4.8
	39.0	4.8	4.1	5.7	4.6	6.6	5.1	7.1	5.2	7.2	5.1	7.4	5.0	7.6	4.7
100	10.0	7.6	6.2	9.0	6.9	10.5	7.8	11.2	8.0	11.9	8.1	13.4	8.5	14.7	8.7
	12.0	7.6	6.2	9.0	6.9	10.5	7.8	11.2	8.0	11.9	8.1	13.4	8.5	14.5	8.5
	14.0	7.6	6.2	9.0	6.9	10.5	7.8	11.2	8.0	11.9	8.1	13.4	8.5	14.4	8.4
	16.0	7.6	6.2	9.0	6.9	10.5	7.8	11.2	8.0	11.9	8.1	13.4	8.5	14.2	8.3
	18.0	7.6	6.2	9.0	6.9	10.5	7.8	11.2	8.0	11.9	8.1	13.4	8.5	14.0	8.2
	20.0	7.6	6.2	9.0	6.9	10.5	7.8	11.2	8.0	11.9	8.1	13.4	8.5	13.8	8.1
	21.0	7.6	6.2	9.0	6.9	10.5	7.8	11.2	8.0	11.9	8.1	13.4	8.5	13.7	8.0
	23.0	7.6	6.2	9.0	6.9	10.5	7.8	11.2	8.0	11.9	8.1	13.2	8.3	13.5	7.9
	25.0	7.6	6.2	9.0	6.9	10.5	7.8	11.2	8.0	11.9	8.1	13.0	8.2	13.3	7.8
	27.0	7.6	6.2	9.0	6.9	10.5	7.8	11.2	8.0	11.9	8.1	12.8	8.1	13.1	7.7
	29.0	7.6	6.2	9.0	6.9	10.5	7.8	11.2	8.0	11.9	8.1	12.6	8.0	12.9	7.6
	31.0	7.6	6.2	9.0	6.9	10.5	7.8	11.2	8.0	11.9	8.1	12.4	7.9	12.7	7.6
	33.0	7.6	6.2	9.0	6.9	10.5	7.8	11.2	8.0	11.9	8.1	12.2	7.8	12.5	7.5
	35.0	7.6	6.2	9.0	6.9	10.5	7.8	11.2	8.0	11.8	8.1	12.1	7.7	12.3	7.4
	37.0	7.6	6.2	9.0	6.9	10.5	7.8	11.2	8.0	11.6	8.0	11.9	7.7	12.2	7.3
	39.0	7.6	6.2	9.0	6.9	10.5	7.8	11.2	8.0	11.4	7.9	11.7	7.6	12.0	7.2

TC Total capacity ; kW
SHC Sensible heat capacity ; kW

Refer to Outdoor Unit Capacity Tables : on page 339~, for the actual performance data of each indoor and outdoor unit combination.

7.2 Heating Capacity

FXHQ-MA **[50/60Hz]**

Heating capacity

Unit Size	Outdoor air temp. °CDB	Outdoor air temp. °CWB	Indoor air temp. °CDB 16.0 kW	18.0 kW	20.0 kW	21.0 kW	22.0 kW	24.0 kW
32	-19.8	-20.0	2.4	2.4	2.3	2.3	2.3	2.3
	-18.8	-19.0	2.4	2.4	2.4	2.4	2.4	2.4
	-16.7	-17.0	2.6	2.6	2.6	2.6	2.6	2.5
	-14.7	-15.0	2.7	2.7	2.7	2.7	2.7	2.7
	-12.6	-13.0	2.9	2.8	2.8	2.8	2.8	2.8
	-10.5	-11.0	3.0	3.0	3.0	3.0	3.0	3.0
	-9.5	-10.0	3.1	3.1	3.1	3.1	3.0	3.0
	-8.5	-9.1	3.1	3.1	3.1	3.1	3.1	3.1
	-7.0	-7.6	3.2	3.2	3.2	3.2	3.2	3.2
	-5.0	-5.6	3.4	3.4	3.4	3.4	3.4	3.4
	-3.0	-3.7	3.5	3.5	3.5	3.5	3.5	3.5
	0.0	-0.7	3.7	3.7	3.7	3.7	3.7	3.5
	3.0	2.2	3.9	3.9	3.9	3.9	3.7	3.5
	5.0	4.1	4.1	4.0	4.0	3.9	3.7	3.5
	7.0	6.0	4.2	4.0	4.0	3.9	3.7	3.5
	9.0	7.9	4.3	4.0	4.0	3.9	3.7	3.5
	11.0	9.8	4.5	4.3	4.0	3.9	3.7	3.5
	13.0	11.8	4.5	4.3	4.0	3.9	3.7	3.5
	15.0	13.7	4.5	4.3	4.0	3.9	3.7	3.5
63	-19.8	-20.0	4.7	4.7	4.7	4.7	4.7	4.7
	-18.8	-19.0	4.9	4.9	4.8	4.8	4.8	4.8
	-16.7	-17.0	5.1	5.1	5.1	5.1	5.1	5.1
	-14.7	-15.0	5.4	5.4	5.4	5.4	5.4	5.4
	-12.6	-13.0	5.7	5.7	5.7	5.7	5.7	5.7
	-10.5	-11.0	6.0	6.0	6.0	6.0	6.0	5.9
	-9.5	-10.0	6.1	6.1	6.1	6.1	6.1	6.1
	-8.5	-9.1	6.3	6.3	6.2	6.2	6.2	6.2
	-7.0	-7.6	6.5	6.5	6.4	6.4	6.4	6.4
	-5.0	-5.6	6.8	6.7	6.7	6.7	6.7	6.7
	-3.0	-3.7	7.0	7.0	7.0	7.0	7.0	7.0
	0.0	-0.7	7.5	7.4	7.4	7.4	7.4	7.0
	3.0	2.2	7.9	7.8	7.8	7.7	7.5	7.0
	5.0	4.1	8.1	8.1	8.0	7.7	7.5	7.0
	7.0	6.0	8.4	8.4	8.0	7.7	7.5	7.0
	9.0	7.9	8.7	8.5	8.0	7.7	7.5	7.0
	11.0	9.8	8.9	8.5	8.0	7.7	7.5	7.0
	13.0	11.8	9.0	8.5	8.0	7.7	7.5	7.0
	15.0	13.7	9.0	8.5	8.0	7.7	7.5	7.0
100	-19.8	-20.0	7.4	7.4	7.3	7.3	7.3	7.3
	-18.8	-19.0	7.6	7.6	7.6	7.5	7.5	7.5
	-16.7	-17.0	8.0	8.0	8.0	8.0	8.0	8.0
	-14.7	-15.0	8.5	8.5	8.4	8.4	8.4	8.4
	-12.6	-13.0	8.9	8.9	8.9	8.9	8.9	8.8
	-10.5	-11.0	9.4	9.3	9.3	9.3	9.3	9.3
	-9.5	-10.0	9.6	9.6	9.5	9.5	9.5	9.5
	-8.5	-9.1	9.8	9.8	9.7	9.7	9.7	9.7
	-7.0	-7.6	10.1	10.1	10.1	10.1	10.1	10.0
	-5.0	-5.6	10.6	10.5	10.5	10.5	10.5	10.5
	-3.0	-3.7	11.0	11.0	10.9	10.9	10.9	10.9
	0.0	-0.7	11.6	11.6	11.6	11.6	11.6	10.9
	3.0	2.2	12.3	12.3	12.2	12.1	11.7	10.9
	5.0	4.1	12.7	12.7	12.5	12.1	11.7	10.9
	7.0	6.0	13.1	13.1	12.5	12.1	11.7	10.9
	9.0	7.9	13.5	13.3	12.5	12.1	11.7	10.9
	11.0	9.8	14.0	13.3	12.5	12.1	11.7	10.9
	13.0	11.8	14.1	13.3	12.5	12.1	11.7	10.9
	15.0	13.7	14.1	13.3	12.5	12.1	11.7	10.9

Refer to Outdoor Unit Capacity Tables : on page 342–, for the actual performance data of each indoor and outdoor unit combination.

8

8. Air Velocity and Temperature Distributions (Reference Data)

FXHQ100MA

(Heating · Air Velocity Distribution)

Center Air Flow

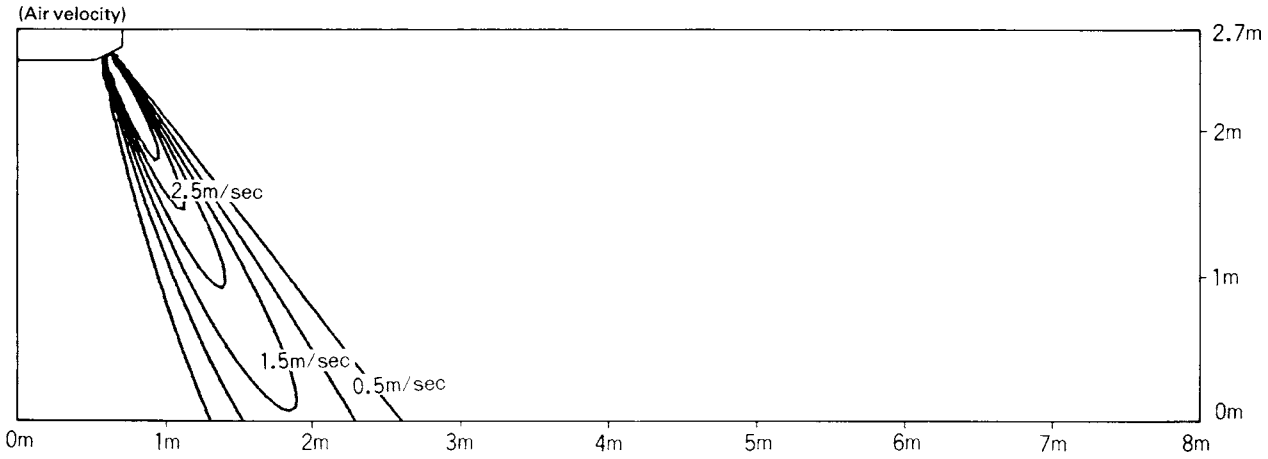

(V0466)

FXHQ100MA

(Heating · Temperature Distribution)

Center Air Flow

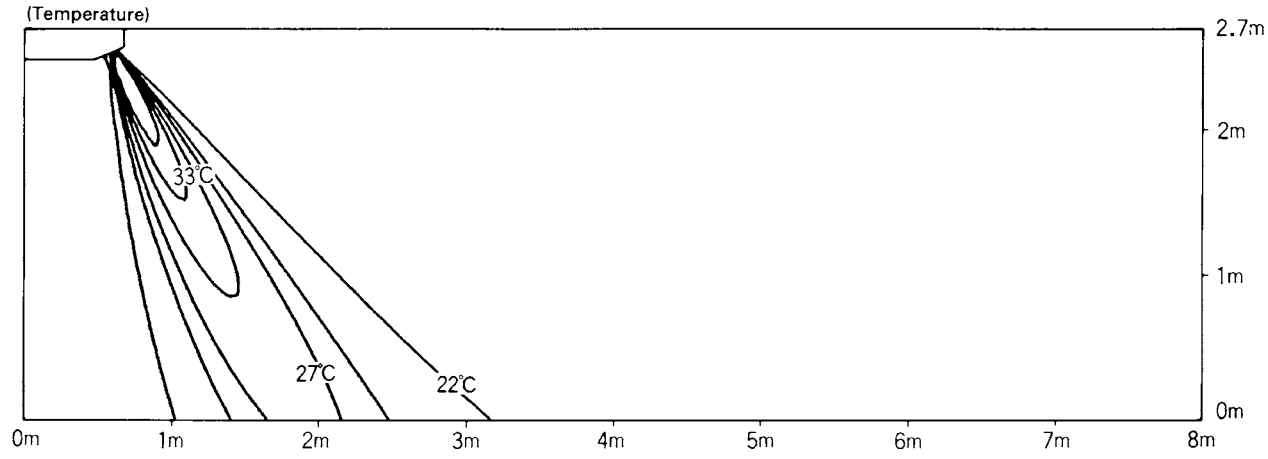

(V0467)

9. Sound Levels

Overall

■ **Ceiling Suspended Type**

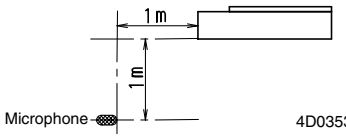

dBA

Model	220~240V, 50/60Hz	
	H	L
FXHQ32MA	36	31
FXHQ63MA	39	34
FXHQ100MA	45	37

Note:

1. The operating conditions are assumed to be standard (JIS conditions).
2. These operating values were obtained in a dead room (conversion values).
   Sound level will vary depending on a range of factors such as the construction (acoustic absorption coefficient) of the particular room in which the equipments installed.

Octave Band Level

○——○ 220~240V 50/60Hz

FXHQ32MAVE

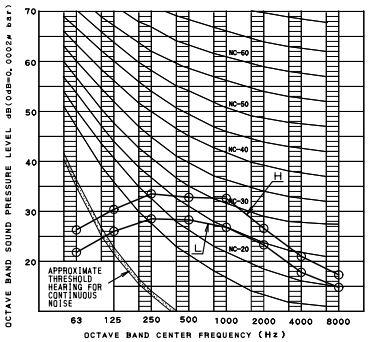

C : 4D035301

FXHQ63MAVE

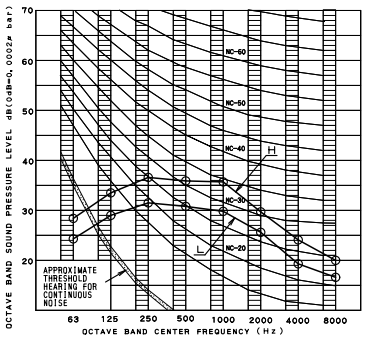

C : 4D035302

FXHQ100MAVE

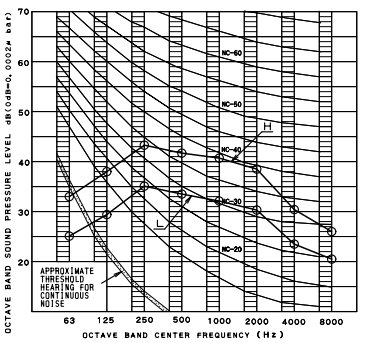

C : 4D035303

8

10. Installation

Installation Example

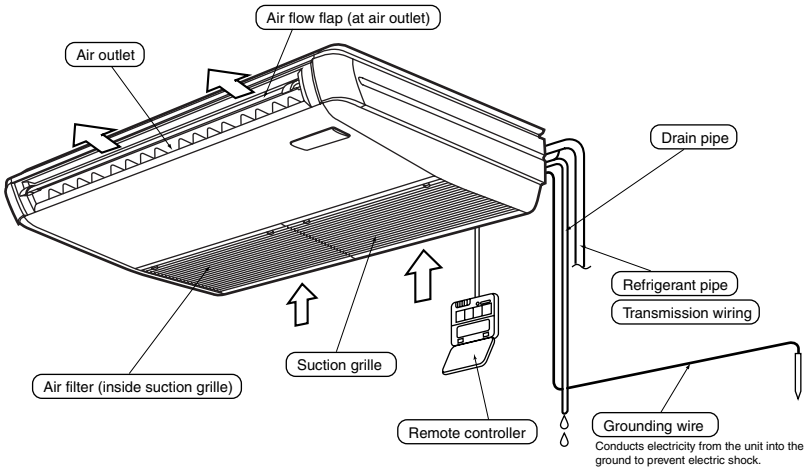

C : 3PN02401-4Y

Service Space

(1) Select an installation site where the following conditions are fulfilled and that meets your customer's approval.

- In the upper space of the indoor unit where there is no possible dripping of water from the refrigerant pipe, drain pipe, water pipe, etc.
- Where optimum air distribution can be ensured.
- Where nothing blocks air passage.
- Where condensate can be properly drained.
- If supporting structural members are not strong enough to take the unit's weight, the unit could fall out of place and cause serious injury.
- Where the false ceiling is not noticeably on an incline.
- Where there is no risk of flammable gas leakage.
- Where sufficient clearance for maintenance and service can be ensured. **(Refer to Fig. 1)**
  If sufficient clearance could be ensured at*, leave a space of 200 mm or more between the unit and it's surroundings easier maintenance and service.
- Where piping between indoor and outdoor units is possible within the allowable limit. (Refer to the installation manual for the outdoor unit.)

⚠ CAUTION

- Install the indoor and outdoor units, power supply wiring and connecting wires at least 1 meter away from televisions or radios in order to prevent image interference or noise.
  (Depending on the radio waves, a distance of 1 meter may not be sufficient enough to eliminate the noise.)

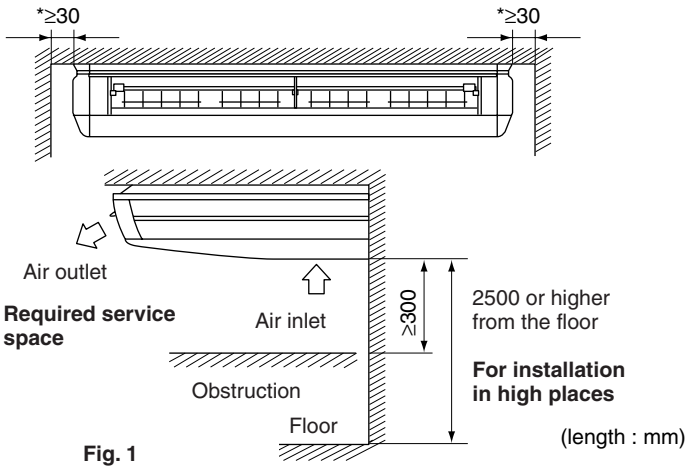

Fig. 1

(2) This indoor unit may be installed on ceilings up to 3.5 m in height. However, if the ceiling is higher than 2.7m, the remote control will have to be set locally. (Refer to "FIELD SETTING")

(3) Use suspension bolts for installation. Check whether the ceiling is strong enough to support the weight of the unit or not. If there is a risk, reinforce the ceiling before installing the unit.
(Installation pitch is marked on the paper pattern for installation. Refer to it to check for points requiring reinforcing.)

C : 3P172532-7

Bolt Pitch

(1) Relative positions of indoor unit, suspension bolt, piping hole, drain piping hole, and electric wire hole position. (Refer to Fig. 2)

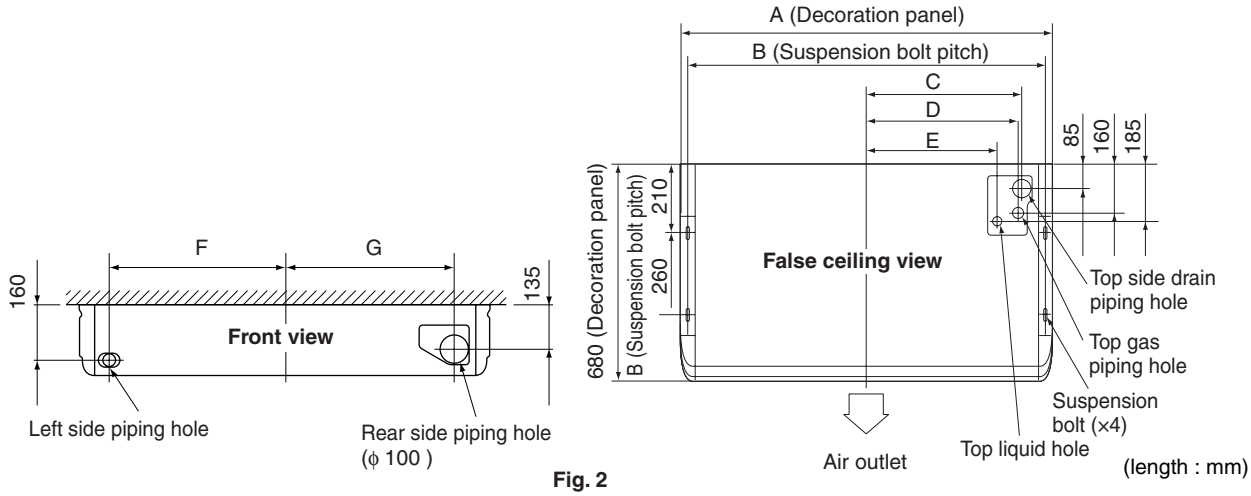

Fig. 2

Model	A	B	C	D	E	F	G
FXHQ32M(A)VE	960	920	390	375	310	400	375
FXHQ63M(A)VE	1160	1120	490	475	410	500	475
FXHQ100M(A)VE	1400	1360	610	595	530	620	595

(2) Make the suspension bolt hole, piping hole, drain piping hole.

- Refer to the paper pattern for installation for hole positions.
- Fix the positions for suspension bolt, piping hole, drain piping hole, and electric wire hole, and make the openings.

C : 3P172532-7

Drain Piping Work

Rig the drain pipe as shown below and take measures against condensation. Improperly rigged piping could lead to leaks and eventually wet furniture and belongings.

(1) Carry out the drain piping.

- For drain work, rig the pipes so that they drain reliably.
- The drain pipe outlet direction can be chosen from the right rear, right, left rear, and left. Refer to “REFRIGERANT PIPING WORK” for right rear and right direction, and refer to Fig. 20 for left rear and left direction.

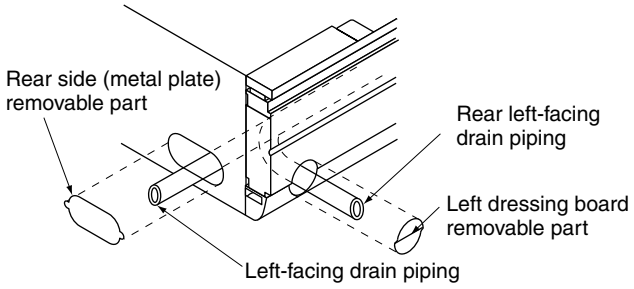

Fig. 20

- For left drain pipe outlet, remove the rubber plug and the insulation on the drain pipe connecting opening on the left side of the unit and change the position to the right side.
- Insert the rubber stopper securely, all the way to the base, in order to prevent water leakage.
- The diameter of the drain pipe should be greater than or equal to the diameter of the connecting pipe. (Vinyl tube ; pipe size : 20 mm ; outer dimension : 26 mm)
- Keep the drain pipe short and sloping downwards at a gradient of at least 1/100 to prevent air pockets from forming. **(Refer to Fig. 21)**
- Use the drain hose (1) and the metal clamp (2).
  Insert the drain hose into the drain socket, up to the gray tape. **(Refer to Fig. 22)**
  Tighten the metal clamp until the screw head is less than 4 mm from the hose. **(Refer to Fig. 23)**
  (Be careful of the installation direction. Install so that the metal clamp does not contact the intake grill.)
- Wrap the sealing pad (8) (accessory) over the clamp and drain hose to insulate. **(Refer to Fig. 23)**
- No folding of drain hose inside the indoor unit. **(Refer to Fig. 24)**
  (If there is slack in the drain hose, it may cause damage to the intake grill.)

C : 3P172532-7

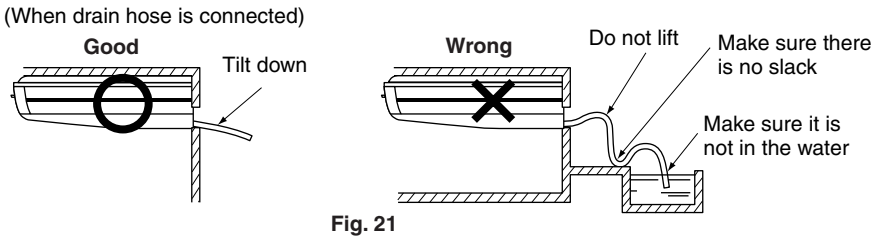

Fig. 21

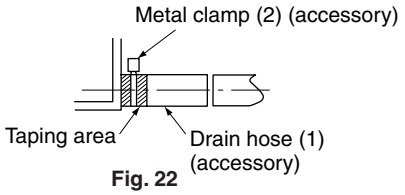

Fig. 22

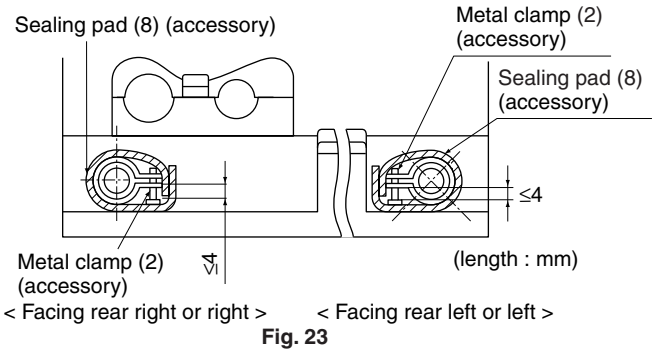

Fig. 23

NOTE

- To ensure no excessive pressure is applied to the included drain hose (1), do not bend or twist when installing. (This may cause leakage.)
- If converging multiple drain pipes, install according to the procedure shown below.

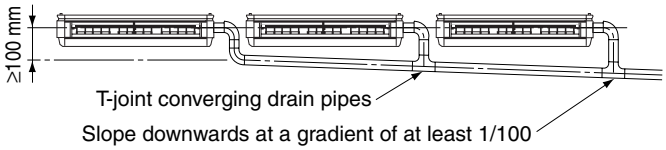

Select converging drain pipes whose gauge is suitable for the operating capacity of the unit.

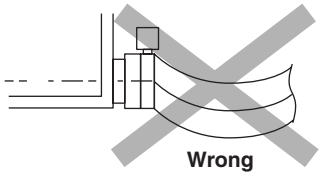

Fig. 24

(2) Confirm that smooth drainage is achieved after the piping work.

- Add 0.6 liter of water in the drain pan from the air outlet for confirming drainage. **(Refer to Fig. 25)**

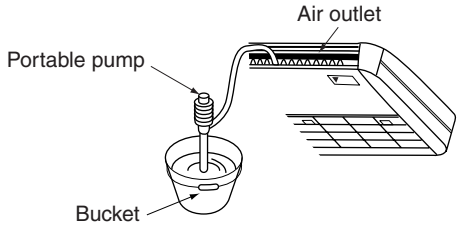

Fig. 25

⚠ CAUTION

- Drain piping connections
  Do not connect the drain piping directly to sewage pipes that smell of ammonia. The ammonia in the sewage might enter the indoor unit through the drain pipes and corrode the heat exchanger.
- Keep in mind that it will become the cause of getting drain pipe blocked if water collects on drain pipe.

C : 3P172532-7

11. Accessories

Standard Accessories

FXHQ32~100MA

Name	(1) Drain hose	(2) Metal clamp	(3) Washer for hanging bracket	(4) Clamp	(5) Paper pattern for installation	Insulation for fitting
Quantity	1 pc.	1 pc.	8 pcs.	6 pcs.	1 pc.	1 each
Shape					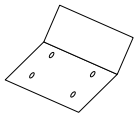	(6)For gas pipe 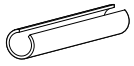 (7)For liquid pipe 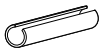

Name	Sealing pad	
Quantity	1 each	
Shape	(8) Large  (9) Small 	(Other) • Operation manual • Installation manual

C : 3P172532-7

Optional Accessories (For Unit)

No.	Model / Item	FXHQ32MAVE	FXHQ63MAVE	FXHQ100MAVE
1	Drain pump kit	KDU50M60VE	KDU50M125VE	
2	Replacement long-life filter (Resin net)	KAFJ501D56	KAFJ501D80	KAFJ501D112
3	L-type piping kit (for upward direction)	KHFP5M35	KHFP5M63	

C : 4D040446A

Optional Accessories (For Controls) : Refer to P.375

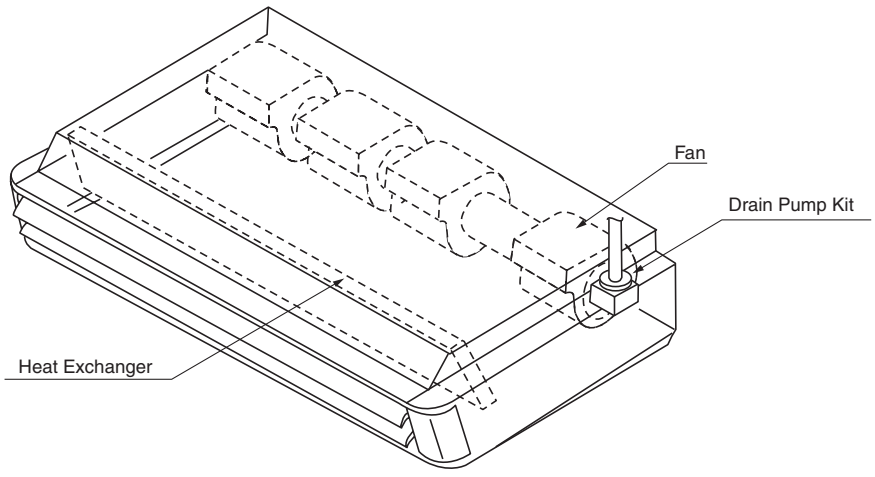

(V0681)

Drain Pump Kit

Specifications

Items \ Model		KDU50M60VE	KDU50M125VE	
Drain-up Lift (mm)		600		
Drain Con. Diameter		VP20 (Ex. dia. ϕ26, Int. dia. ϕ20)		
Pump	Power Supply	Single phase 220-240V/220V 50/60Hz (from Indoor Unit PC Board)		
	Power Consumption (W)	20/17 (50/60Hz)		
Applicable Models		32 class	63 class	100 class

Precaution at use

1. Don't turn off the power within 5 minutes after cooling operation stops.
2. The liquid crystal display blinks to inform us that safety device actuated.
3. When cooling operation's season is over, extract drain water.

Installation guide of the drain pump kit

<Changes in drain pump kit>

- Exit drain pipe has been changed from VP25 to VP20 (to meet the drain diameter of main frame).
- Attached drain pipe (450 mm chloride vinyl straight pipe bellow, elbow) -> only bellow hose for VP20
- All units of drain up height was unified to 600mm (From the bottom of the ceiling)

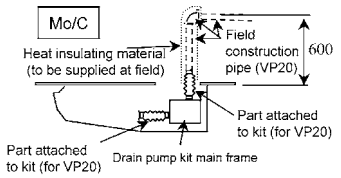

Wiring diagram

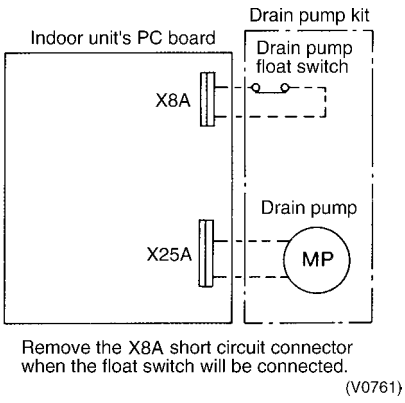

L Shape Connection Pipe Kit

Application purpose

This kit must be bent inside the unit as shown below, when the refrigerant piping is carried out in a ceiling space. This L shape kit is an optional accessory which has been developed for improving the work of the processing on site.

Installation

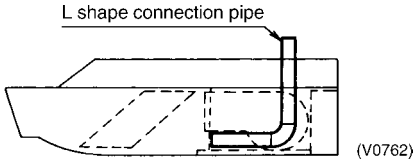

FXAQ-MA
Wall Mounted Type

1. Features 240
2. Specifications 241
3. Dimensions 243
4. Piping Diagrams 246
5. Wiring Diagrams 247
6. Electric Characteristics 248
7. Capacity Tables 249
   7.1 Cooling Capacity 249
   7.2 Heating Capacity 250
8. Sound Levels 251
9. Installation 252
10. Accessories 260

1. Features

External Appearance



- Compact and stylish design that does not detract from the decor of the room.

- More compact than compared with previous model. (50, 63 class)

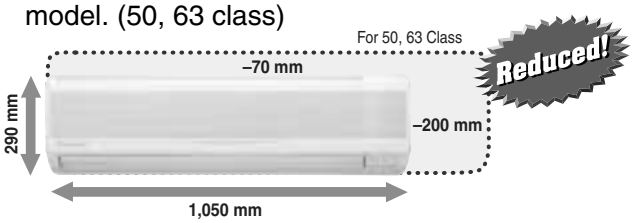

  - Drastic 10 kg weight reduction from 24 kg to 14 kg.
  - Volume reduced by 22%.
  - Space savings of up to 47%.

- Low operating sound

(220V-240V)(dB(A))

Class	20	25	32	40	50	63
Operating sound (H/L)	35/29	36/29	37/29	39/34	42/36	46/39

- Drain pan and air filter can be kept clean by mildew-proof polystyrene.

- Washable grille, the front grille can be easily removed for washing.

- Auto-swing ensures efficiency of air distribution. The louver closes automatically when the unit stops.

- 5 steps of discharge angle can be set by remote controller.

- Discharge angle is automatically set at the same angle as the previous operation when restarts. (Initial setting; 10˚ for cooling and 70˚ for heating)



- Drain-pump kit is available as optional accessory, which lifts the drain 1,000mm from the bottom of the unit.

- Flexible installation.
  - Drain pipe can be fitted to from either left or right sides.

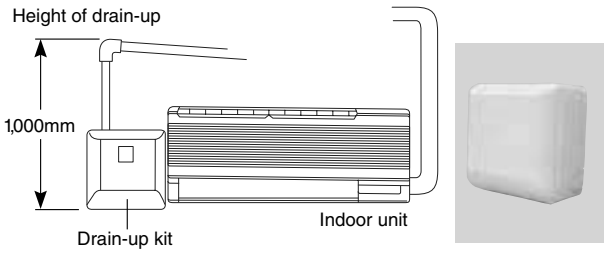

2. Specifications

Wall Mounted Type

Model			FXAQ20MAVE	FXAQ25MAVE	FXAQ32MAVE
∗1 Cooling Capacity (19.5°CWB)		kcal/h	2,000	2,500	3,200
		Btu/h	7,800	9,900	12,600
		kW	2.3	2.9	3.7
∗2 Cooling Capacity (19.0°CWB)		kW	2.2	2.8	3.6
∗3 Heating Capacity		kcal/h	2,200	2,800	3,400
		Btu/h	8,500	10,900	13,600
		kW	2.5	3.2	4.0
Casing Color			White (3.0Y8.5/0.5)	White (3.0Y8.5/0.5)	White (3.0Y8.5/0.5)
Dimensions: (H×W×D)		mm	290×795×230	290×795×230	290×795×230
Coil (Cross Fin Coil)	Rows×Stages×Fin Pitch	mm	2×14×1.4	2×14×1.4	2×14×1.4
	Face Area	m²	0.161	0.161	0.161
Fan	Model		QCL9661M	QCL9661M	QCL9661M
	Type		Cross Flow Fan	Cross Flow Fan	Cross Flow Fan
	Motor Output × Number of Units	W	40×1	40×1	40×1
	Air Flow Rate (H/L)	m³/min	7.5/4.5	8/5	9/5.5
		cfm	265/159	282/177	318/194
	Drive		Direct Drive	Direct Drive	Direct Drive
Temperature Control			Microprocessor Thermostat for Cooling and Heating	Microprocessor Thermostat for Cooling and Heating	Microprocessor Thermostat for Cooling and Heating
Sound Absorbing Thermal Insulation Material			Foamed Polystyrene / Foamed Polyethylene	Foamed Polystyrene / Foamed Polyethylene	Foamed Polystyrene / Foamed Polyethylene
Air Filter			Resin Net (Washable)	Resin Net (Washable)	Resin Net (Washable)
Piping Connections	Liquid Pipes	mm	ϕ6.4 (Flare Connection)	ϕ6.4 (Flare Connection)	ϕ6.4 (Flare Connection)
	Gas Pipes	mm	ϕ12.7 (Flare Connection)	ϕ12.7 (Flare Connection)	ϕ12.7 (Flare Connection)
	Drain Pipe	mm	VP13 (External Dia. 18 Internal Dia. 13)	VP13 (External Dia. 18 Internal Dia. 13)	VP13 (External Dia. 18 Internal Dia. 13)
Machine Weight (Mass)		kg	11	11	11
∗5 Sound Level (H/L) (220-240V)		dBA	35/29	36/29	37/29
Safety Devices			Fuse	Fuse	Fuse
Refrigerant Control			Electronic Expansion Valve	Electronic Expansion Valve	Electronic Expansion Valve
Connectable Outdoor Unit			R-410A P Series	R-410A P Series	R-410A P Series
Standard Accessories			Operation Manual. Installation Manual. Installation Panel. Paper Pattern for Installation. Insulation Tape. Clamps. Screws.	Operation Manual. Installation Manual. Installation Panel. Paper Pattern for Installation. Insulation Tape. Clamps. Screws.	Operation Manual. Installation Manual. Installation Panel. Paper Pattern for Installation. Insulation Tape. Clamps. Screws.
Drawing No.			C : 3D039370B		

Note:

∗1 Indoor temp. : 27°CDB, 19.5°CWB / outdoor temp. : 35°CDB / Equivalent piping length : 7.5 m, level difference : 0 m.
∗2 Indoor temp. : 27°CDB, 19.0°CWB / outdoor temp. : 35°CDB / Equivalent piping length :7.5 m, level difference : 0 m.
∗3 Indoor temp. : 20°CDB / outdoor temp. : 7°CDB, 6°CWB / Equivalent piping length : 7.5 m, level difference : 0 m.
4 Capacities are net, including a deduction for cooling (an addition for heating) for indoor fan motor heat.
∗5 Anechoic chamber conversion value, measured at a point 1 m in front of the unit and 1 m downward. During actual operation, these values are normally somewhat higher as a result of ambient conditions.
6 Refer to page 248 for Fan Motor Input.

Conversion Formulae
kcal/h=kW×860 Btu/h=kW×3412 cfm=m³/min×35.3

9

Wall Mounted Type

Model			FXAQ40MAVE	FXAQ50MAVE	FXAQ63MAVE
∗1 Cooling Capacity (19.5°CWB)		kcal/h	4,000	5,000	6,300
		Btu/h	16,000	19,800	24,900
		kW	4.7	5.8	7.3
∗2 Cooling Capacity (19.0°CWB)		kW	4.5	5.6	7.1
∗3 Heating Capacity		kcal/h	4,300	5,400	6,900
		Btu/h	17,000	21,500	27,300
		kW	5.0	6.3	8.0
Casing Color			White (3.0Y8.5/0.5)	White (3.0Y8.5/0.5)	White (3.0Y8.5/0.5)
Dimensions: (H×W×D)		mm	290×1,050×230	290×1,050×230	290×1,050×230
Coil (Cross Fin Coil)	Rows×Stages×Fin Pitch	mm	2×14×1.4	2×14×1.4	2×14×1.4
	Face Area	m²	0.213	0.213	0.213
Fan	Model		QCL9686M	QCL9686M	QCL9686M
	Type		Cross Flow Fan	Cross Flow Fan	Cross Flow Fan
	Motor Output × Number of Units	W	43×1	43×1	43×1
	Air Flow Rate (H/L)	m³/min	12/9	15/12	19/14
		cfm	424/318	530/424	671/494
	Drive		Direct Drive	Direct Drive	Direct Drive
Temperature Control			Microprocessor Thermostat for Cooling and Heating	Microprocessor Thermostat for Cooling and Heating	Microprocessor Thermostat for Cooling and Heating
Sound Absorbing Thermal Insulation Material			Foamed Polystyrene / Foamed Polyethylene	Foamed Polystyrene / Foamed Polyethylene	Foamed Polystyrene / Foamed Polyethylene
Air Filter			Resin Net (Washable)	Resin Net (Washable)	Resin Net (Washable)
Piping Connections	Liquid Pipes	mm	ϕ6.4 (Flare Connection)	ϕ6.4 (Flare Connection)	ϕ9.5 (Flare Connection)
	Gas Pipes	mm	ϕ12.7 (Flare Connection)	ϕ12.7 (Flare Connection)	ϕ15.9 (Flare Connection)
	Drain Pipe	mm	VP13 (External Dia. 18 Internal Dia. 13)	VP13 (External Dia. 18 Internal Dia. 13)	VP13 (External Dia. 18 Internal Dia. 13)
Machine Weight (Mass)		kg	14	14	14
∗5 Sound Level (H/L) (220-240V)		dBA	39/34	42/36	46/39
Safety Devices			Fuse	Fuse	Fuse
Refrigerant Control			Electronic Expansion Valve	Electronic Expansion Valve	Electronic Expansion Valve
Connectable Outdoor Unit			R-410A P Series	R-410A P Series	R-410A P Series
Standard Accessories			Operation Manual. Installation Manual. Installation Panel. Paper Pattern for Installation. Insulation Tape. Clamps. Screws.	Operation Manual. Installation Manual. Installation Panel. Paper Pattern for Installation. Insulation Tape. Clamps. Screws.	Operation Manual. Installation Manual. Installation Panel. Paper Pattern for Installation. Insulation Tape. Clamps. Screws.
Drawing No.			C : 3D039370B		

Note:

∗1 Indoor temp. : 27°CDB, 19.5°CWB / outdoor temp : 35°CDB / Equivalent piping length : 7.5 m, level difference : 0 m.
∗2 Indoor temp. : 27°CDB, 19.0°CWB / outdoor temp : 35°CDB / Equivalent piping length : 7.5 m, level difference : 0 m.
∗3 Indoor temp. : 20°CDB / outdoor temp. : 7°CDB, 6°CWB / Equivalent piping length : 7.5 m, level difference : 0 m.
4 Capacities are net, including a deduction for cooling (an addition for heating) for indoor fan motor heat.
∗5 Anechoic chamber conversion value, measured at a point 1 m in front of the unit and 1 m downward. During actual operation, these values are normally somewhat higher as a result of ambient conditions.
6 Refer to page 248 for Fan Motor Input.

Conversion Formulae
kcal/h=kW×860 Btu/h=kW×3412 cfm=m³/min×35.3

3. Dimensions

FXAQ20MA
FXAQ25MA
FXAQ32MA

Unit (mm)

No.	Name	Description
9	Left side pipe connection hole	
8	Right side pipe connection hole	
7	Grounding terminal	M4
6	Drain hose	VP13 (External dia. φ18)
5	Liquid pipe	φ6.4 Flare connection
4	Gas pipe	φ12.7 Flare connection
3	Air outlet	
2	Front grill	
1	Front panel	

3D034903C

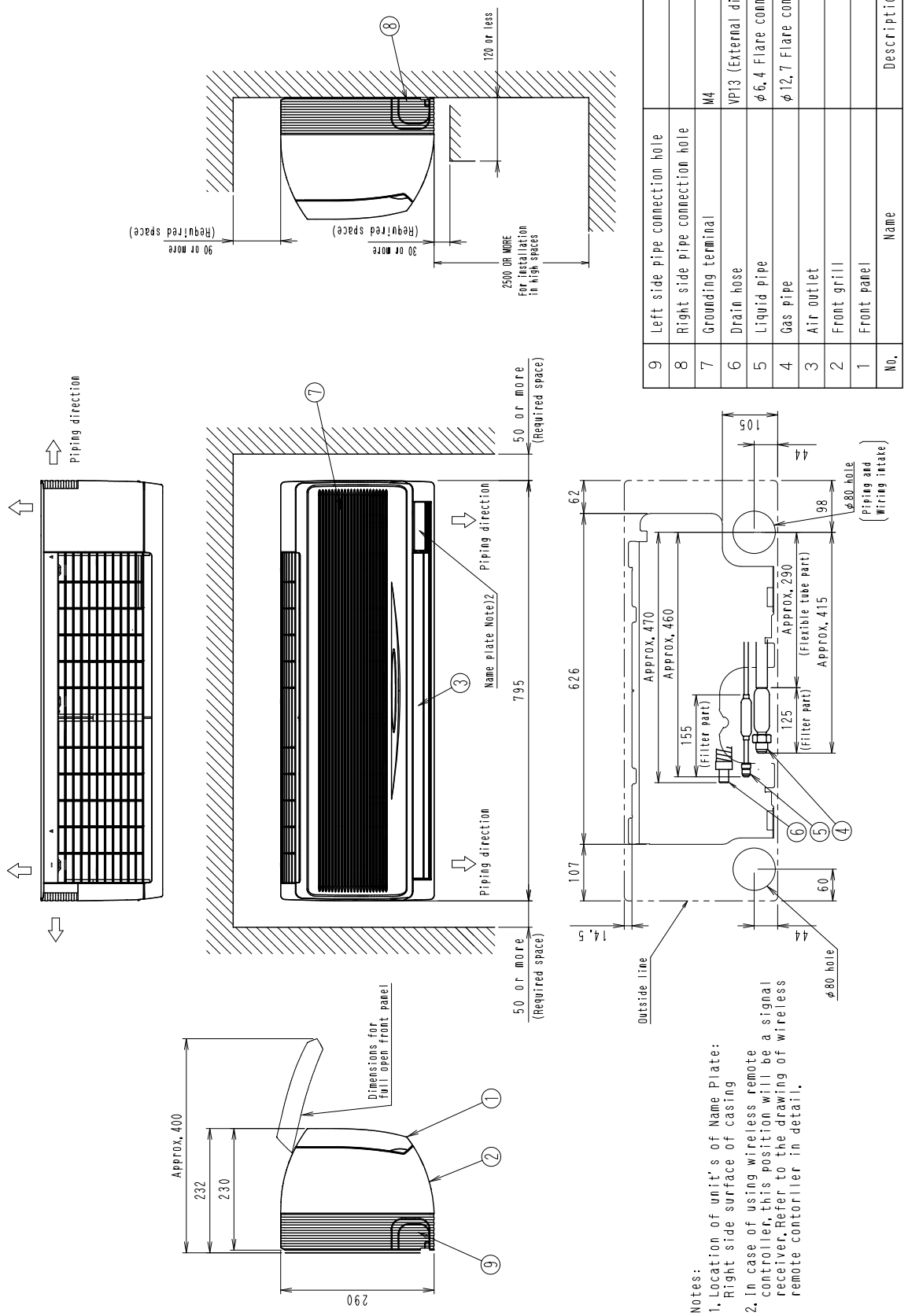

Notes:
1. Location of unit's of Name Plate:
   Right side surface of casing
2. In case of using wireless remote controller, this position will be a signal receiver. Refer to the drawing of wireless remote controller in detail.

FXAQ40MA
FXAQ50MA

Unit (mm)

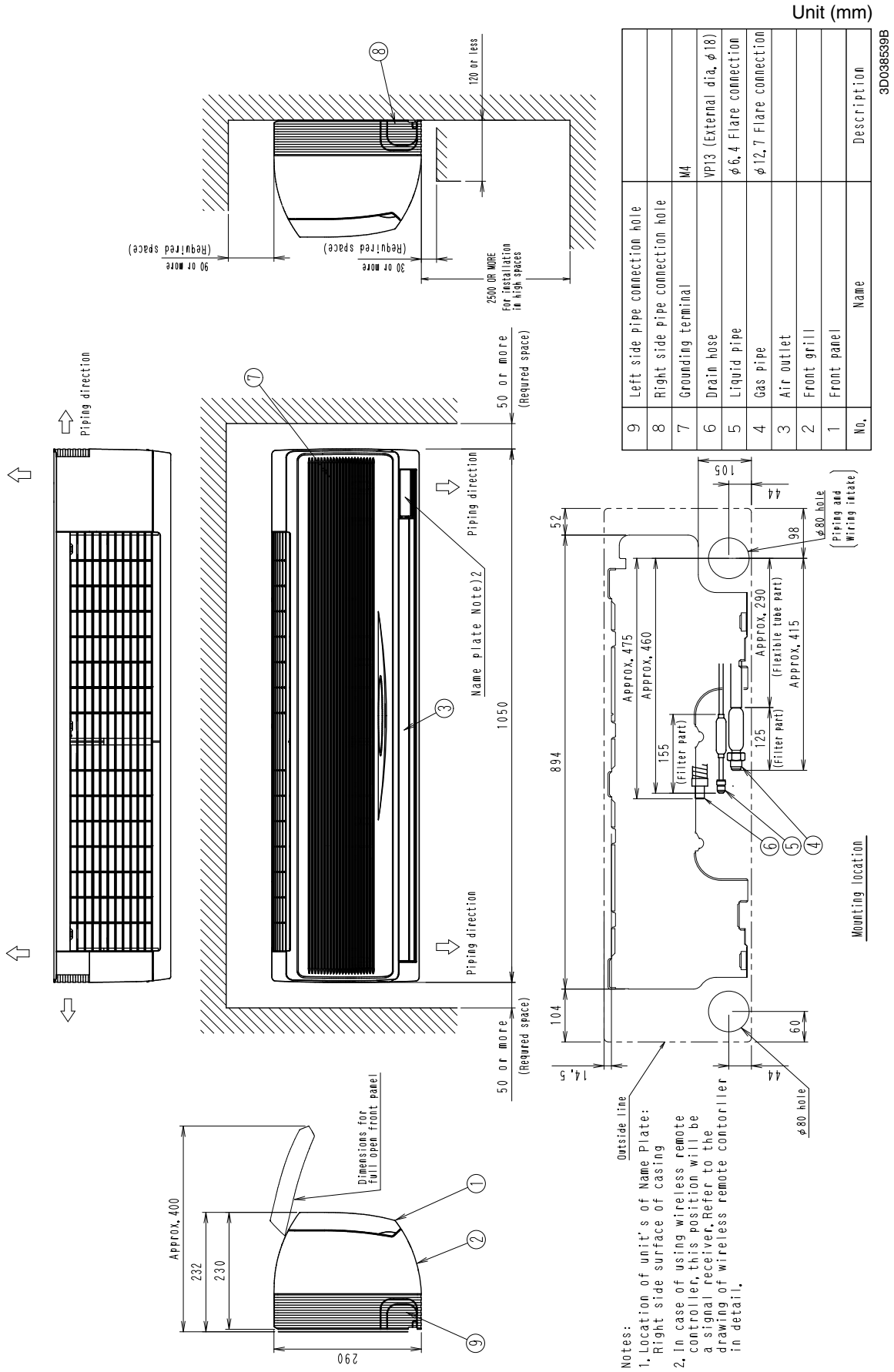

FXAQ63MA

Unit (mm)

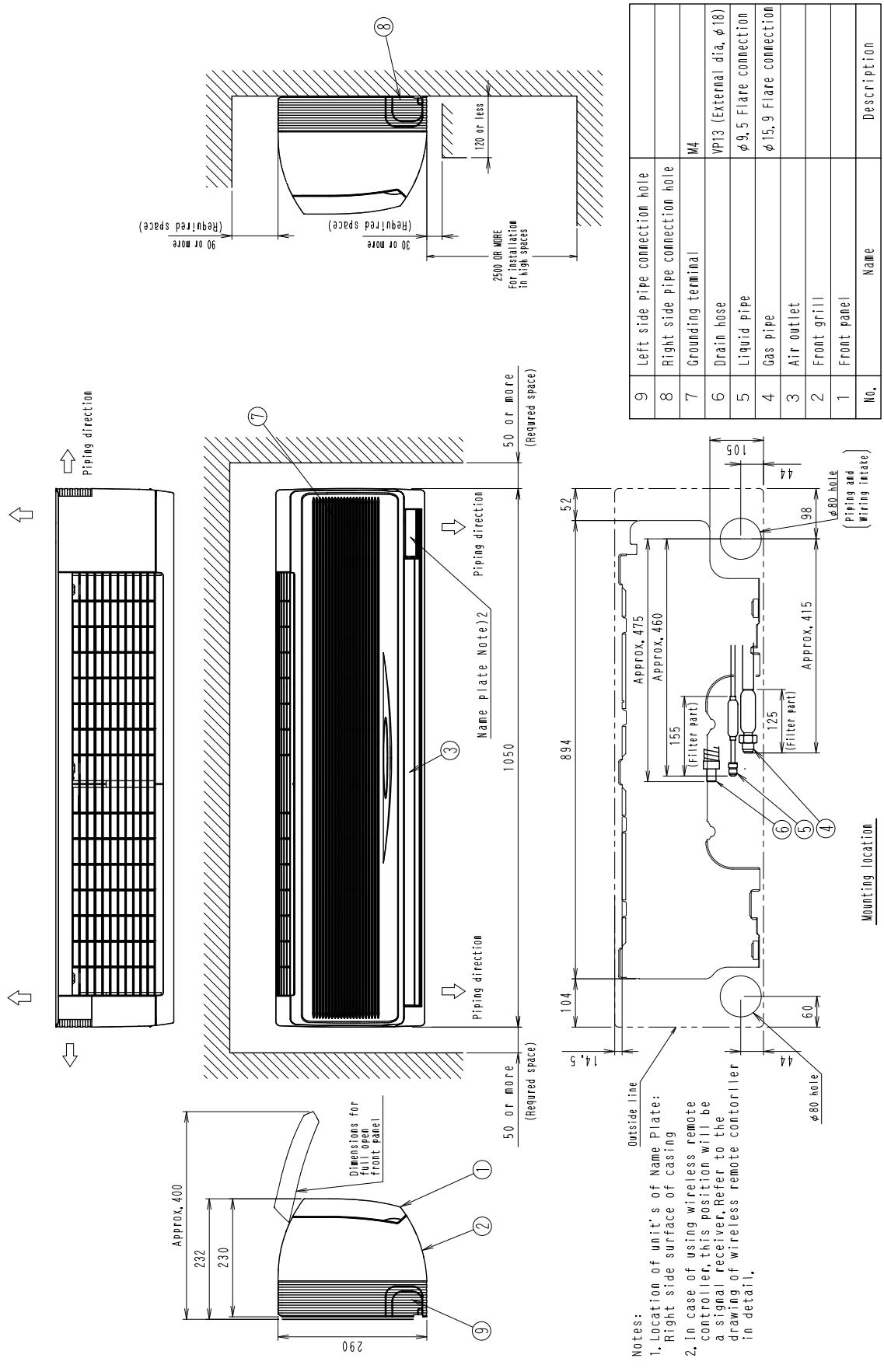

4. Piping Diagrams

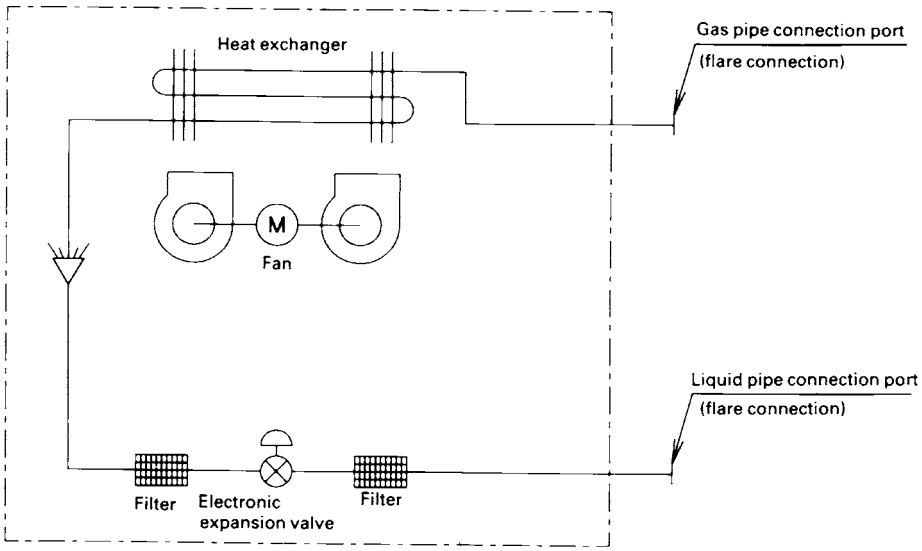

JC : DU220-602J

■ **Refrigerant pipe connection port diameters**

(mm)

Model	Gas	Liquid
FXAQ20 · 25 · 32 · 40 · 50MA	ϕ12.7	ϕ6.4
FXAQ63MA	ϕ15.9	ϕ9.5

5. Wiring Diagrams

FXAQ20 · 25 · 32 · 40 · 50 · 63MAVE

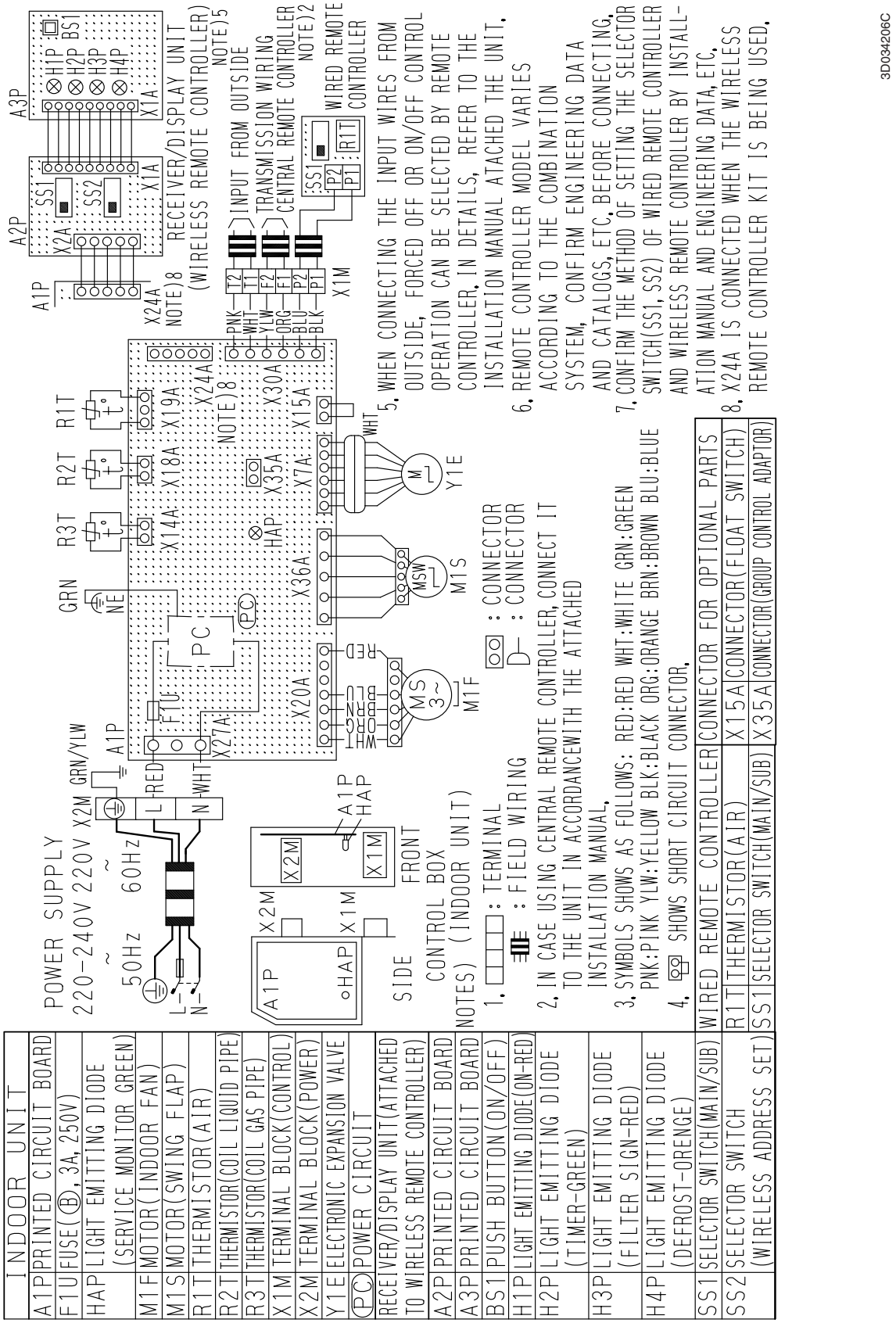

INDOOR UNIT			
A1P	PRINTED CIRCUIT BOARD		
F1U	FUSE(Ⓑ, 3A, 250V)		
HAP	LIGHT EMITTING DIODE (SERVICE MONITOR GREEN)		
M1F	MOTOR(INDOOR FAN)		
M1S	MOTOR(SWING FLAP)		
R1T	THERMISTOR(AIR)		
R2T	THERMISTOR(COIL LIQUID PIPE)		
R3T	THERMISTOR(COIL GAS PIPE)		
X1M	TERMINAL BLOCK(CONTROL)		
X2M	TERMINAL BLOCK(POWER)		
Y1E	ELECTRONIC EXPANSION VALVE		
(PC)	POWER CIRCUIT		
A2P	PRINTED CIRCUIT BOARD	RECEIVER/DISPLAY UNIT(ATTACHED TO WIRELESS REMOTE CONTROLLER)	
A3P	PRINTED CIRCUIT BOARD		
BS1	PUSH BUTTON(ON/OFF)		
H1P	LIGHT EMITTING DIODE(ON-RED)		
H2P	LIGHT EMITTING DIODE (TIMER-GREEN)		
H3P	LIGHT EMITTING DIODE (FILTER SIGN-RED)		
H4P	LIGHT EMITTING DIODE (DEFROST-ORENGE)		
SS1	SELECTOR SWITCH(MAIN/SUB)	WIRED REMOTE CONTROLLER	CONNECTOR FOR OPTIONAL PARTS
SS2	SELECTOR SWITCH (WIRELESS ADDRESS SET)	R1T THERMISTOR(AIR)	X15A CONNECTOR(FLOAT SWITCH)
		SS1 SELECTOR SWITCH(MAIN/SUB)	X35A CONNECTOR(GROUP CONTROL ADAPTOR)

6. Electric Characteristics

Units					Power supply		IFM		Input(W)	
Model	Type	Hz	Volts	Voltage range	MCA	MFA	kW	FLA	Cooling	Heating
FXAQ20MA	VE	50	220-240	MAX. 264 Min. 198	0.3	15	0.040	0.2	16	24
FXAQ25MA					0.4	15	0.040	0.3	22	27
FXAQ32MA					0.4	15	0.040	0.3	27	32
FXAQ40MA	VE				0.4	15	0.043	0.3	20	20
FXAQ50MA					0.4	15	0.043	0.3	27	32
FXAQ63MA					0.6	15	0.043	0.5	50	60
FXAQ20MA	VE	60	220	MAX. 242 Min. 198	0.3	15	0.040	0.2	16	24
FXAQ25MA					0.3	15	0.040	0.2	22	27
FXAQ32MA					0.4	15	0.040	0.3	27	32
FXAQ40MA	VE				0.4	15	0.043	0.3	20	20
FXAQ50MA					0.4	15	0.043	0.3	27	32
FXAQ63MA					0.6	15	0.043	0.5	50	60

Symbols:
MCA : Min. Circuit Amps (A)
MFA : Max. Fuse Amps (See note 5)
kW : Fan Motor Rated Output(kW)
FLA : Full Load Amps(A)
IFM : Indoor Fan Motor

Note:
1. Voltage range
   Units are suitable for use on electrical systems where voltage supplied to unit terminals is not below or above listed range limits.
2. Maximum allowable voltage unbalance between phases is 2%.
3. MCA/MFA
   MCA = 1.25 X FLA
   MFA ≦ 4 X FLA
   (Next lower standard fuse rating. Min. 15A)
4. Select wire size based on the MCA.
5. Instead of fuse, use Circuit Breaker.

C : 4D034907E

7. Capacity Tables

7.1 Cooling Capacity

FXAQ-MA **[50/60Hz]**

Cooling capacity

Unit Size	Outdoor air temp. °CDB	Indoor air temp. 14.0°CWB 20°CDB TC	SHC	16.0°CWB 23°CDB TC	SHC	18.0°CWB 26°CDB TC	SHC	19.0°CWB 27°CDB TC	SHC	20.0°CWB 28°CDB TC	SHC	22.0°CWB 30°CDB TC	SHC	24.0°CWB 32°CDB TC	SHC
20	10.0	1.5	1.5	1.8	1.8	2.1	1.9	2.2	1.9	2.3	1.9	2.6	2.0	2.9	1.9
	12.0	1.5	1.5	1.8	1.8	2.1	1.9	2.2	1.9	2.3	1.9	2.6	2.0	2.9	1.9
	14.0	1.5	1.5	1.8	1.8	2.1	1.9	2.2	1.9	2.3	1.9	2.6	2.0	2.8	1.9
	16.0	1.5	1.5	1.8	1.8	2.1	1.9	2.2	1.9	2.3	1.9	2.6	2.0	2.7	1.9
	18.0	1.5	1.5	1.8	1.8	2.1	1.9	2.2	1.9	2.3	1.9	2.6	2.0	2.7	1.9
	20.0	1.5	1.5	1.8	1.8	2.1	1.9	2.2	1.9	2.3	1.9	2.6	2.0	2.7	1.9
	21.0	1.5	1.5	1.8	1.8	2.1	1.9	2.2	1.9	2.3	1.9	2.6	2.0	2.7	1.9
	23.0	1.5	1.5	1.8	1.8	2.1	1.9	2.2	1.9	2.3	1.9	2.6	1.9	2.6	1.9
	25.0	1.5	1.5	1.8	1.8	2.1	1.9	2.2	1.9	2.3	1.9	2.6	1.9	2.6	1.9
	27.0	1.5	1.5	1.8	1.8	2.1	1.9	2.2	1.9	2.3	1.9	2.5	1.9	2.5	1.8
	29.0	1.5	1.5	1.8	1.8	2.1	1.9	2.2	1.9	2.3	1.9	2.5	1.9	2.5	1.8
	31.0	1.5	1.5	1.8	1.8	2.1	1.9	2.2	1.9	2.3	1.9	2.5	1.9	2.5	1.8
	33.0	1.5	1.5	1.8	1.8	2.1	1.9	2.2	1.9	2.3	1.9	2.4	1.9	2.4	1.8
	35.0	1.5	1.5	1.8	1.8	2.1	1.9	2.2	1.9	2.3	1.9	2.4	1.9	2.4	1.8
	37.0	1.5	1.5	1.8	1.8	2.1	1.9	2.2	1.9	2.3	1.9	2.4	1.9	2.4	1.7
	39.0	1.5	1.5	1.8	1.8	2.1	1.9	2.2	1.9	2.2	1.9	2.3	1.8	2.3	1.7
25	10.0	1.9	1.8	2.3	2.0	2.6	2.2	2.8	2.2	3.0	2.2	3.4	2.3	3.7	2.3
	12.0	1.9	1.8	2.3	2.0	2.6	2.2	2.8	2.2	3.0	2.2	3.4	2.3	3.6	2.2
	14.0	1.9	1.8	2.3	2.0	2.6	2.2	2.8	2.2	3.0	2.2	3.4	2.3	3.6	2.3
	16.0	1.9	1.8	2.3	2.0	2.6	2.2	2.8	2.2	3.0	2.2	3.4	2.3	3.5	2.2
	18.0	1.9	1.8	2.3	2.0	2.6	2.2	2.8	2.2	3.0	2.2	3.4	2.3	3.4	2.2
	20.0	1.9	1.8	2.3	2.0	2.6	2.2	2.8	2.2	3.0	2.2	3.4	2.3	3.4	2.2
	21.0	1.9	1.8	2.3	2.0	2.6	2.2	2.8	2.2	3.0	2.2	3.4	2.3	3.4	2.2
	23.0	1.9	1.8	2.3	2.0	2.6	2.2	2.8	2.2	3.0	2.2	3.3	2.2	3.3	2.2
	25.0	1.9	1.8	2.3	2.0	2.6	2.2	2.8	2.2	3.0	2.2	3.3	2.2	3.3	2.1
	27.0	1.9	1.8	2.3	2.0	2.6	2.2	2.8	2.2	3.0	2.2	3.2	2.2	3.2	2.1
	29.0	1.9	1.8	2.3	2.0	2.6	2.2	2.8	2.2	3.0	2.2	3.2	2.2	3.2	2.1
	31.0	1.9	1.8	2.3	2.0	2.6	2.2	2.8	2.2	3.0	2.2	3.1	2.2	3.1	2.1
	33.0	1.9	1.8	2.3	2.0	2.6	2.2	2.8	2.2	3.0	2.2	3.1	2.2	3.1	2.1
	35.0	1.9	1.8	2.3	2.0	2.6	2.2	2.8	2.2	3.0	2.2	3.0	2.1	3.0	2.0
	37.0	1.9	1.8	2.3	2.0	2.6	2.2	2.8	2.2	2.9	2.2	3.0	2.1	3.0	2.0
	39.0	1.9	1.8	2.3	2.0	2.6	2.2	2.8	2.2	2.9	2.2	2.9	2.1	3.0	2.0
32	10.0	2.4	2.2	2.9	2.4	3.4	2.6	3.6	2.7	3.8	2.7	4.3	2.8	4.7	2.8
	12.0	2.4	2.2	2.9	2.4	3.4	2.6	3.6	2.7	3.8	2.7	4.3	2.8	4.7	2.8
	14.0	2.4	2.2	2.9	2.4	3.4	2.6	3.6	2.7	3.8	2.7	4.3	2.8	4.6	2.8
	16.0	2.4	2.2	2.9	2.4	3.4	2.6	3.6	2.7	3.8	2.7	4.3	2.8	4.6	2.8
	18.0	2.4	2.2	2.9	2.4	3.4	2.6	3.6	2.7	3.8	2.7	4.3	2.8	4.5	2.7
	20.0	2.4	2.2	2.9	2.4	3.4	2.6	3.6	2.7	3.8	2.7	4.3	2.8	4.4	2.7
	21.0	2.4	2.2	2.9	2.4	3.4	2.6	3.6	2.7	3.8	2.7	4.3	2.8	4.4	2.7
	23.0	2.4	2.2	2.9	2.4	3.4	2.6	3.6	2.7	3.8	2.7	4.2	2.8	4.3	2.7
	25.0	2.4	2.2	2.9	2.4	3.4	2.6	3.6	2.7	3.8	2.7	4.2	2.8	4.3	2.6
	27.0	2.4	2.2	2.9	2.4	3.4	2.6	3.6	2.7	3.8	2.7	4.1	2.7	4.2	2.6
	29.0	2.4	2.2	2.9	2.4	3.4	2.6	3.6	2.7	3.8	2.7	4.1	2.7	4.2	2.6
	31.0	2.4	2.2	2.9	2.4	3.4	2.6	3.6	2.7	3.8	2.7	4.0	2.7	4.1	2.6
	33.0	2.4	2.2	2.9	2.4	3.4	2.6	3.6	2.7	3.8	2.7	3.9	2.6	4.0	2.5
	35.0	2.4	2.2	2.9	2.4	3.4	2.6	3.6	2.7	3.8	2.7	3.9	2.6	4.0	2.5
	37.0	2.4	2.2	2.9	2.4	3.4	2.6	3.6	2.7	3.7	2.6	3.8	2.6	3.9	2.5
	39.0	2.4	2.2	2.9	2.4	3.4	2.6	3.6	2.7	3.7	2.6	3.8	2.6	3.8	2.5

Cooling capacity

Unit Size	Outdoor air temp. °CDB	Indoor air temp. 14.0°CWB 20°CDB TC	SHC	16.0°CWB 23°CDB TC	SHC	18.0°CWB 26°CDB TC	SHC	19.0°CWB 27°CDB TC	SHC	20.0°CWB 28°CDB TC	SHC	22.0°CWB 30°CDB TC	SHC	24.0°CWB 32°CDB TC	SHC
40	10.0	3.0	2.9	3.3	3.3	4.2	3.7	4.5	3.5	4.8	3.6	5.4	3.6	5.9	3.6
	12.0	3.0	2.9	3.3	3.3	4.2	3.7	4.5	3.5	4.8	3.6	5.4	3.6	5.8	3.5
	14.0	3.0	2.9	3.3	3.3	4.2	3.7	4.5	3.5	4.8	3.6	5.4	3.6	5.8	3.5
	16.0	3.0	2.9	3.3	3.3	4.2	3.7	4.5	3.5	4.8	3.6	5.4	3.6	5.7	3.5
	18.0	3.0	2.9	3.3	3.3	4.2	3.7	4.5	3.5	4.8	3.6	5.4	3.6	5.6	3.4
	20.0	3.0	2.9	3.3	3.3	4.2	3.7	4.5	3.5	4.8	3.6	5.4	3.6	5.5	3.4
	21.0	3.0	2.9	3.3	3.3	4.2	3.7	4.5	3.5	4.8	3.6	5.4	3.6	5.5	3.4
	23.0	3.0	2.9	3.3	3.3	4.2	3.7	4.5	3.5	4.8	3.6	5.3	3.6	5.4	3.3
	25.0	3.0	2.9	3.3	3.3	4.2	3.7	4.5	3.5	4.8	3.6	5.2	3.6	5.3	3.3
	27.0	3.0	2.9	3.3	3.3	4.2	3.7	4.5	3.5	4.8	3.6	5.2	3.5	5.3	3.3
	29.0	3.0	2.9	3.3	3.3	4.2	3.7	4.5	3.5	4.8	3.6	5.1	3.5	5.2	3.2
	31.0	3.0	2.9	3.3	3.3	4.2	3.7	4.5	3.5	4.8	3.6	5.1	3.4	5.1	3.2
	33.0	3.0	2.9	3.3	3.3	4.2	3.7	4.5	3.5	4.8	3.6	4.9	3.4	5.0	3.1
	35.0	3.0	2.9	3.3	3.3	4.2	3.7	4.5	3.5	4.7	3.6	4.9	3.3	4.9	3.1
	37.0	3.0	2.9	3.3	3.3	4.2	3.7	4.5	3.5	4.7	3.5	4.8	3.3	4.9	3.1
	39.0	3.0	2.9	3.3	3.3	4.2	3.7	4.5	3.5	4.6	3.5	4.7	3.3	4.8	3.0
50	10.0	3.8	3.2	4.5	3.7	5.2	4.1	5.6	4.2	6.0	4.3	6.7	4.4	7.4	4.4
	12.0	3.8	3.2	4.5	3.7	5.2	4.1	5.6	4.2	6.0	4.3	6.7	4.4	7.3	4.3
	14.0	3.8	3.2	4.5	3.7	5.2	4.1	5.6	4.2	6.0	4.3	6.7	4.4	7.2	4.3
	16.0	3.8	3.2	4.5	3.7	5.2	4.1	5.6	4.2	6.0	4.3	6.7	4.4	7.1	4.2
	18.0	3.8	3.2	4.5	3.7	5.2	4.1	5.6	4.2	6.0	4.3	6.7	4.4	7.0	4.2
	20.0	3.8	3.2	4.5	3.7	5.2	4.1	5.6	4.2	6.0	4.3	6.7	4.4	6.9	4.2
	21.0	3.8	3.2	4.5	3.7	5.2	4.1	5.6	4.2	6.0	4.3	6.7	4.4	6.8	4.2
	23.0	3.8	3.2	4.5	3.7	5.2	4.1	5.6	4.2	6.0	4.3	6.6	4.4	6.7	4.1
	25.0	3.8	3.2	4.5	3.7	5.2	4.1	5.6	4.2	6.0	4.3	6.5	4.3	6.6	4.1
	27.0	3.8	3.2	4.5	3.7	5.2	4.1	5.6	4.2	6.0	4.3	6.4	4.3	6.6	4.0
	29.0	3.8	3.2	4.5	3.7	5.2	4.1	5.6	4.2	6.0	4.3	6.3	4.2	6.5	4.0
	31.0	3.8	3.2	4.5	3.7	5.2	4.1	5.6	4.2	6.0	4.3	6.2	4.2	6.4	3.9
	33.0	3.8	3.2	4.5	3.7	5.2	4.1	5.6	4.2	6.0	4.3	6.1	4.2	6.3	3.9
	35.0	3.8	3.2	4.5	3.7	5.2	4.1	5.6	4.2	5.9	4.3	6.0	4.1	6.2	3.8
	37.0	3.8	3.2	4.5	3.7	5.2	4.1	5.6	4.2	5.8	4.3	5.9	4.1	6.1	3.8
	39.0	3.8	3.2	4.5	3.7	5.2	4.1	5.6	4.2	5.7	4.2	5.8	4.0	6.0	3.8
63	10.0	4.8	4.1	5.7	4.6	6.6	5.1	7.1	5.3	7.6	5.4	8.5	5.6	9.3	5.3
	12.0	4.8	4.1	5.7	4.6	6.6	5.1	7.1	5.3	7.6	5.4	8.5	5.6	9.2	5.3
	14.0	4.8	4.1	5.7	4.6	6.6	5.1	7.1	5.3	7.6	5.4	8.5	5.6	9.1	5.2
	16.0	4.8	4.1	5.7	4.6	6.6	5.1	7.1	5.3	7.6	5.4	8.5	5.6	9.0	5.2
	18.0	4.8	4.1	5.7	4.6	6.6	5.1	7.1	5.3	7.6	5.4	8.5	5.6	8.8	5.2
	20.0	4.8	4.1	5.7	4.6	6.6	5.1	7.1	5.3	7.6	5.4	8.5	5.6	8.7	5.1
	21.0	4.8	4.1	5.7	4.6	6.6	5.1	7.1	5.3	7.6	5.4	8.5	5.6	8.7	5.1
	23.0	4.8	4.1	5.7	4.6	6.6	5.1	7.1	5.3	7.6	5.4	8.4	5.5	8.5	5.0
	25.0	4.8	4.1	5.7	4.6	6.6	5.1	7.1	5.3	7.6	5.4	8.3	5.5	8.4	5.0
	27.0	4.8	4.1	5.7	4.6	6.6	5.1	7.1	5.3	7.6	5.4	8.1	5.4	8.3	4.9
	29.0	4.8	4.1	5.7	4.6	6.6	5.1	7.1	5.3	7.6	5.4	8.0	5.4	8.2	4.9
	31.0	4.8	4.1	5.7	4.6	6.6	5.1	7.1	5.3	7.6	5.4	7.9	5.3	8.1	4.8
	33.0	4.8	4.1	5.7	4.6	6.6	5.1	7.1	5.3	7.6	5.4	7.8	5.2	7.9	4.8
	35.0	4.8	4.1	5.7	4.6	6.6	5.1	7.1	5.3	7.5	5.4	7.7	5.2	7.8	4.7
	37.0	4.8	4.1	5.7	4.6	6.6	5.1	7.1	5.3	7.4	5.3	7.5	5.1	7.7	4.7
	39.0	4.8	4.1	5.7	4.6	6.6	5.1	7.1	5.3	7.2	5.3	7.4	5.1	7.6	4.6

TC Total capacity ; kW
SHC Sensible heat capacity ; kW

Refer to Outdoor Unit Capacity Tables : on page 339~, for the actual performance data of each indoor and outdoor unit combination.

7.2 Heating Capacity

FXAQ-MA [50/60Hz]

Heating capacity

Unit Size	Outdoor air temp. °CDB	Outdoor air temp. °CWB	Indoor air temp. °CDB 16.0 kW	18.0 kW	20.0 kW	21.0 kW	22.0 kW	24.0 kW
20	-19.8	-20.0	1.5	1.5	1.5	1.5	1.5	1.5
	-18.8	-19.0	1.5	1.5	1.5	1.5	1.5	1.5
	-16.7	-17.0	1.6	1.6	1.6	1.6	1.6	1.6
	-14.7	-15.0	1.7	1.7	1.7	1.7	1.7	1.7
	-12.6	-13.0	1.8	1.8	1.8	1.8	1.8	1.8
	-10.5	-11.0	1.9	1.9	1.9	1.9	1.9	1.9
	-9.5	-10.0	1.9	1.9	1.9	1.9	1.9	1.9
	-8.5	-9.1	2.0	2.0	1.9	1.9	1.9	1.9
	-7.0	-7.6	2.0	2.0	2.0	2.0	2.0	2.0
	-5.0	-5.6	2.1	2.1	2.1	2.1	2.1	2.0
	-3.0	-3.7	2.2	2.2	2.2	2.2	2.2	2.2
	0.0	-0.7	2.3	2.3	2.3	2.3	2.3	2.2
	3.0	2.2	2.5	2.5	2.4	2.4	2.3	2.2
	5.0	4.1	2.5	2.6	2.5	2.4	2.3	2.2
	7.0	6.0	2.7	2.7	2.5	2.4	2.3	2.2
	9.0	7.9	2.8	2.7	2.5	2.4	2.3	2.2
	11.0	9.8	2.8	2.7	2.5	2.4	2.3	2.2
	13.0	11.8	2.8	2.7	2.5	2.4	2.3	2.2
	15.0	13.7	2.8	2.7	2.5	2.4	2.3	2.2
25	-19.8	-20.0	1.9	1.9	1.9	1.9	1.9	1.9
	-18.8	-19.0	1.9	1.9	1.9	1.9	1.9	1.9
	-16.7	-17.0	2.1	2.1	2.0	2.0	2.0	2.0
	-14.7	-15.0	2.2	2.2	2.2	2.2	2.2	2.1
	-12.6	-13.0	2.3	2.4	2.3	2.3	2.3	2.3
	-10.5	-11.0	2.4	2.4	2.4	2.4	2.4	2.4
	-9.5	-10.0	2.5	2.5	2.4	2.4	2.4	2.4
	-8.5	-9.1	2.5	2.5	2.5	2.5	2.5	2.5
	-7.0	-7.6	2.6	2.6	2.6	2.6	2.6	2.6
	-5.0	-5.6	2.7	2.7	2.7	2.7	2.7	2.7
	-3.0	-3.7	2.8	2.8	2.8	2.8	2.8	2.8
	0.0	-0.7	3.0	3.0	3.0	3.0	3.0	2.8
	3.0	2.2	3.1	3.1	3.2	3.1	3.0	2.8
	5.0	4.1	3.3	3.2	3.2	3.1	3.0	2.8
	7.0	6.0	3.4	3.4	3.2	3.1	3.0	2.8
	9.0	7.9	3.5	3.4	3.2	3.1	3.0	2.8
	11.0	9.8	3.6	3.4	3.2	3.1	3.0	2.8
	13.0	11.8	3.6	3.4	3.2	3.1	3.0	2.8
	15.0	13.7	3.6	3.4	3.2	3.1	3.0	2.8
32	-19.8	-20.0	2.4	2.4	2.3	2.3	2.3	2.3
	-18.8	-19.0	2.4	2.4	2.4	2.4	2.4	2.4
	-16.7	-17.0	2.6	2.6	2.6	2.6	2.6	2.5
	-14.7	-15.0	2.7	2.7	2.7	2.7	2.7	2.7
	-12.6	-13.0	2.9	2.8	2.8	2.8	2.8	2.8
	-10.5	-11.0	3.0	3.0	3.0	3.0	3.0	3.0
	-9.5	-10.0	3.1	3.1	3.1	3.1	3.0	3.0
	-8.5	-9.1	3.1	3.1	3.1	3.1	3.1	3.1
	-7.0	-7.6	3.2	3.2	3.2	3.2	3.2	3.2
	-5.0	-5.6	3.4	3.4	3.4	3.4	3.4	3.4
	-3.0	-3.7	3.5	3.5	3.5	3.5	3.5	3.5
	0.0	-0.7	3.7	3.7	3.7	3.7	3.7	3.5
	3.0	2.2	3.9	3.9	4.0	3.9	3.7	3.5
	5.0	4.1	4.2	4.1	4.0	3.9	3.7	3.5
	7.0	6.0	4.2	4.2	4.0	3.9	3.7	3.5
	9.0	7.9	4.3	4.3	4.0	3.9	3.7	3.5
	11.0	9.8	4.5	4.3	4.0	3.9	3.7	3.5
	13.0	11.8	4.5	4.3	4.0	3.9	3.7	3.5
	15.0	13.7	4.5	4.3	4.0	3.9	3.7	3.5

Heating capacity

Unit Size	Outdoor air temp. °CDB	Outdoor air temp. °CWB	Indoor air temp. °CDB 16.0 kW	18.0 kW	20.0 kW	21.0 kW	22.0 kW	24.0 kW
40	-19.8	-20.0	3.0	2.9	2.9	2.9	2.9	2.9
	-18.8	-19.0	3.0	3.0	3.0	3.0	3.0	3.0
	-16.7	-17.0	3.2	3.2	3.2	3.2	3.2	3.2
	-14.7	-15.0	3.4	3.4	3.4	3.4	3.4	3.4
	-12.6	-13.0	3.6	3.6	3.6	3.5	3.5	3.5
	-10.5	-11.0	3.7	3.7	3.7	3.7	3.7	3.7
	-9.5	-10.0	3.8	3.8	3.8	3.8	3.8	3.8
	-8.5	-9.1	3.9	3.9	3.9	3.8	3.9	3.9
	-7.0	-7.6	4.0	4.0	4.0	4.0	4.0	4.0
	-5.0	-5.6	4.2	4.2	4.2	4.2	4.2	4.2
	-3.0	-3.7	4.4	4.4	4.4	4.4	4.4	4.4
	0.0	-0.7	4.7	4.6	4.6	4.6	4.6	4.4
	3.0	2.2	4.9	4.9	4.8	4.8	4.7	4.4
	5.0	4.1	5.1	5.1	5.0	4.8	4.7	4.4
	7.0	6.0	5.2	5.2	5.0	4.8	4.7	4.4
	9.0	7.9	5.4	5.3	5.0	4.8	4.7	4.4
	11.0	9.8	5.6	5.3	5.0	4.8	4.7	4.4
	13.0	11.8	5.6	5.3	5.0	4.8	4.7	4.4
	15.0	13.7	5.6	5.3	5.0	4.8	4.7	4.4
50	-19.8	-20.0	3.7	3.7	3.7	3.7	3.7	3.7
	-18.8	-19.0	3.8	3.8	3.8	3.8	3.8	3.8
	-16.7	-17.0	4.1	4.0	4.0	4.0	4.0	4.0
	-14.7	-15.0	4.3	4.3	4.3	4.2	4.2	4.2
	-12.6	-13.0	4.5	4.5	4.5	4.5	4.5	4.5
	-10.5	-11.0	4.7	4.7	4.7	4.7	4.7	4.7
	-9.5	-10.0	4.8	4.8	4.8	4.8	4.8	4.8
	-8.5	-9.1	4.9	4.9	4.9	4.9	4.9	4.9
	-7.0	-7.6	5.1	5.1	5.1	5.1	5.1	5.1
	-5.0	-5.6	5.3	5.3	5.3	5.3	5.3	5.3
	-3.0	-3.7	5.5	5.5	5.5	5.5	5.5	5.5
	0.0	-0.7	5.9	5.9	5.8	5.8	5.8	5.5
	3.0	2.2	6.2	6.2	6.2	6.1	5.9	5.5
	5.0	4.1	6.4	6.4	6.3	6.1	5.9	5.5
	7.0	6.0	6.6	6.6	6.3	6.1	5.9	5.5
	9.0	7.9	6.8	6.7	6.3	6.1	5.9	5.5
	11.0	9.8	7.0	6.7	6.3	6.1	5.9	5.5
	13.0	11.8	7.1	6.7	6.3	6.1	5.9	5.5
	15.0	13.7	7.1	6.7	6.3	6.1	5.9	5.5
63	-19.8	-20.0	4.7	4.7	4.7	4.7	4.7	4.7
	-18.8	-19.0	4.9	4.9	4.8	4.8	4.8	4.8
	-16.7	-17.0	5.1	5.1	5.1	5.1	5.1	5.1
	-14.7	-15.0	5.4	5.4	5.4	5.4	5.4	5.4
	-12.6	-13.0	5.7	5.7	5.7	5.7	5.7	5.7
	-10.5	-11.0	6.0	6.0	6.0	6.0	6.0	5.9
	-9.5	-10.0	6.1	6.0	6.1	6.1	6.1	6.1
	-8.5	-9.1	6.3	6.3	6.2	6.2	6.2	6.2
	-7.0	-7.6	6.5	6.5	6.4	6.4	6.4	6.4
	-5.0	-5.6	6.8	6.7	6.7	6.7	6.7	6.7
	-3.0	-3.7	7.0	7.0	7.0	7.0	7.0	7.0
	0.0	-0.7	7.5	7.4	7.4	7.4	7.4	7.0
	3.0	2.2	7.9	7.8	7.8	7.7	7.5	7.0
	5.0	4.1	8.1	8.1	8.0	7.7	7.5	7.0
	7.0	6.0	8.4	8.4	8.0	7.7	7.5	7.0
	9.0	7.9	8.7	8.5	8.0	7.7	7.5	7.0
	11.0	9.8	8.9	8.5	8.0	7.7	7.5	7.0
	13.0	11.8	9.0	8.5	8.0	7.7	7.5	7.0
	15.0	13.7	9.0	8.5	8.0	7.7	7.5	7.0

Refer to Outdoor Unit Capacity Tables : on page 342~, for the actual performance data of each indoor and outdoor unit combination.

8. Sound Levels

Overall

■ **Wall Mounted Type**

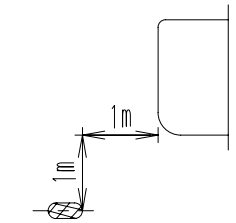

4D037087D

Note:
1. The operating conditions are assumed to be standard (JIS conditions).
2. These operating values were obtained in a dead room (conversion values).
   Sound level will vary depending on a range of factors such as the construction (acoustic absorption coefficient) of the particular room in which the equipments installed.

dBA

Model	220~240V, 50/60Hz	
	H	L
FXAQ20MA	35	29
FXAQ25MA	36	29
FXAQ32MA	37	29
FXAQ40MA	39	34
FXAQ50MA	42	36
FXAQ63MA	46	39

Octave Band Level

○——○ 220~240V 50/60Hz

FXAQ20MAVE

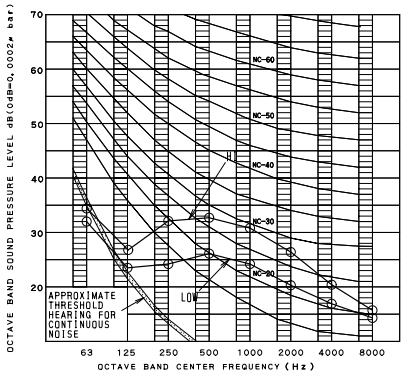

4D037087D

FXAQ25MAVE

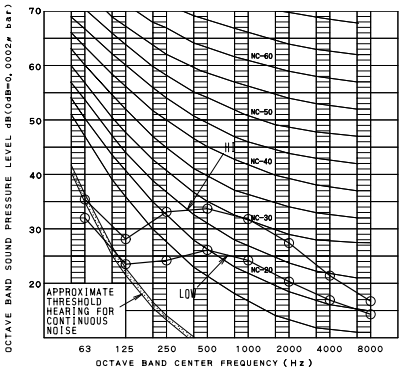

4D037088D

FXAQ32MAVE

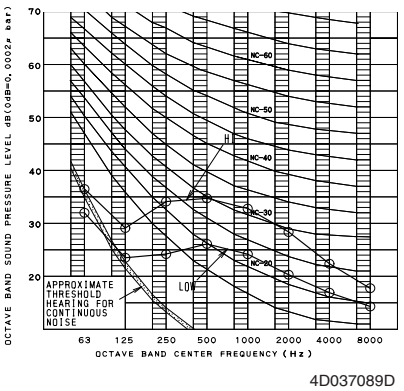

4D037089D

FXAQ40MAVE

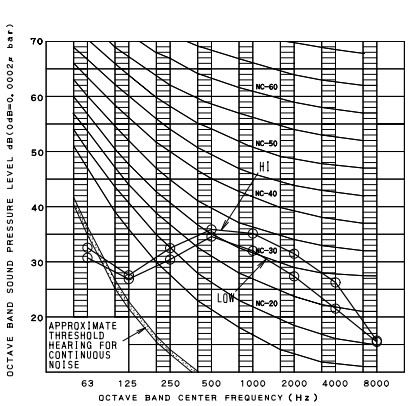

4D038513A

FXAQ50MAVE

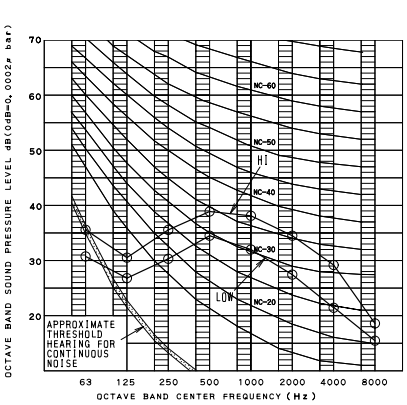

4D038514A

FXAQ63MAVE

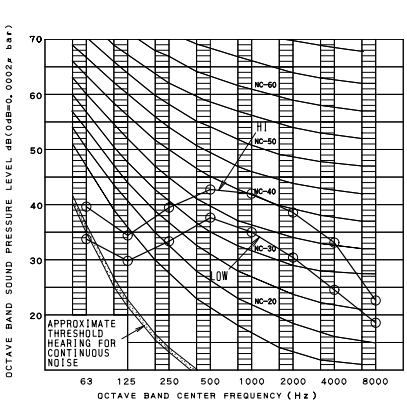

4D038515A

9. Installation

Installation Example

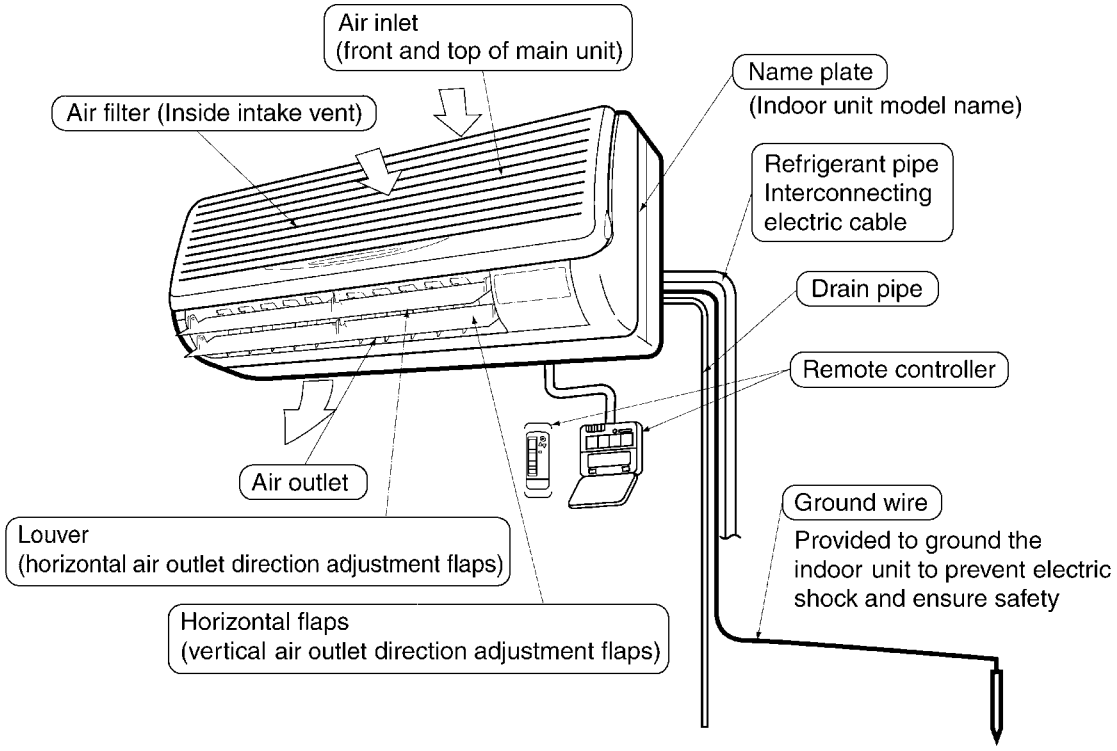

C : 3PN02401-8Q

Recommended mounting-plate retention spots and Dimensions
20 · 25 · 32 class

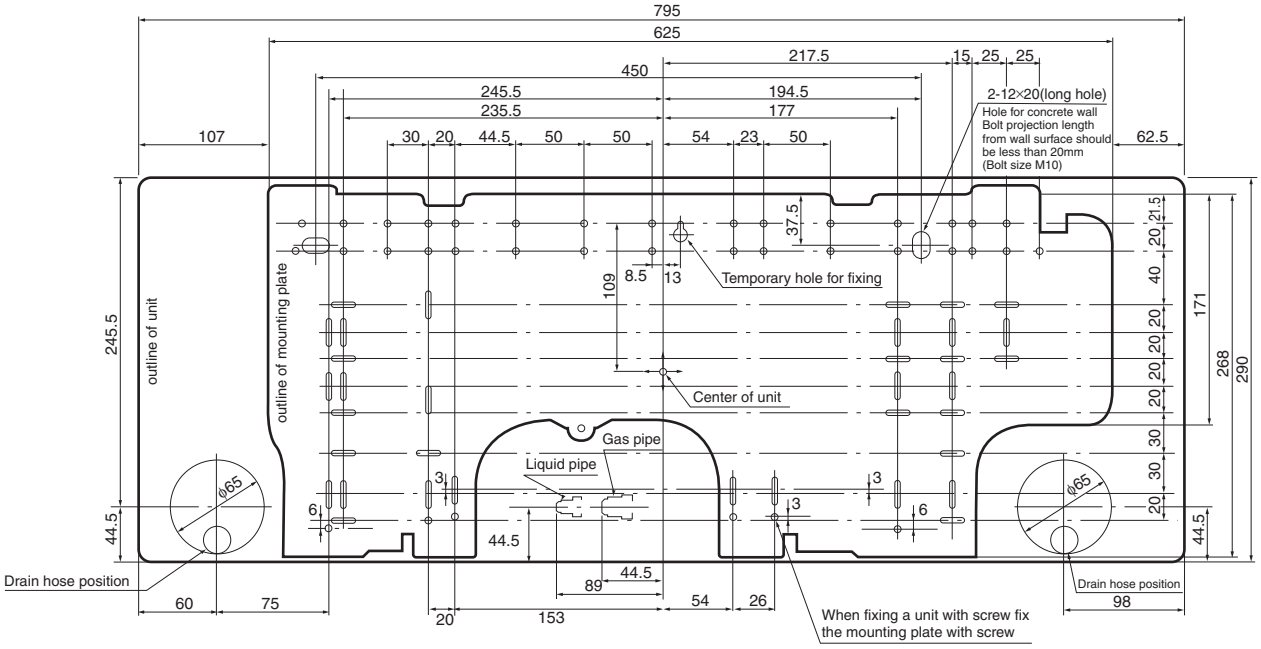

C : 1P079690-1B

40 · 50 · 63 class

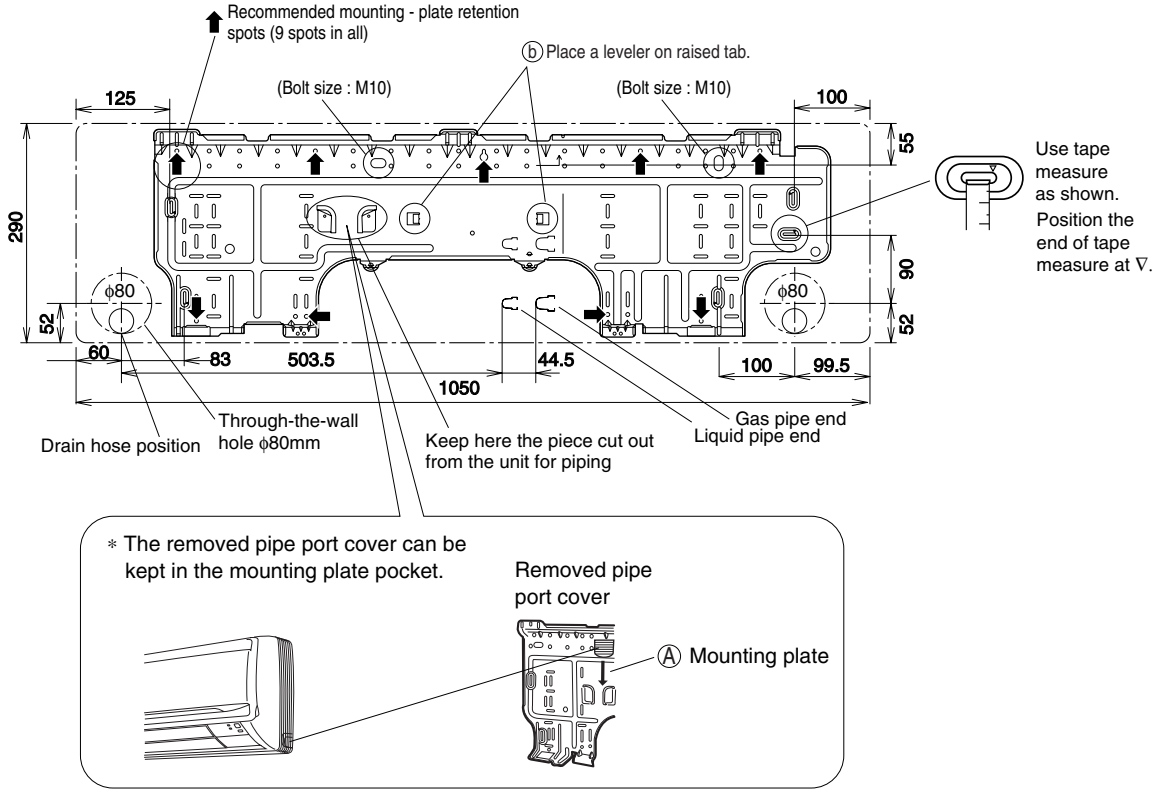

C : 2P095003-1C

9

Service Space

(1) Select an installation site where the following conditions are fulfilled and that meets with your customer's approval.

- In the upper space (including the back of the ceiling) of the indoor unit where there is no possible dripping of water from the refrigerant pipe, drain pipe, water pipe, etc.
- Where the wall is strong enough to bear the indoor unit weight.
- Where sufficient clearance for installation and maintenance can be ensured. **(Refer to Fig. 1 and Fig. 2)**
- Where optimum air distribution can be ensured.
- Where nothing blocks the air passage.
- Where condensate can be properly drained.
- Where the wall is not significantly tilted.
- Where not exposed to combustible gases.
- Where pipe between indoor and outdoor units is possible within the allowable limit. (Refer to the installation manual of the outdoor unit.)
- Install the indoor and outdoor units, power cable and transmission wiring, at least 1 m from TVs and radios, to prevent distorted pictures and static. (Depending on the type and source of the electrical waves, static may be heard even when more than 1 m away.)
- Install the indoor unit no less than 2.5 m above the floor. Where unavoidably lower, take what measures are necessary to keep hands out of the air inlet.
- Where the cool (warm) air reaches all across the room.

[Space required for installation (mm)]

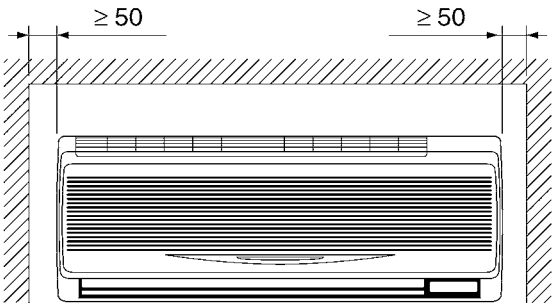

Fig. 1

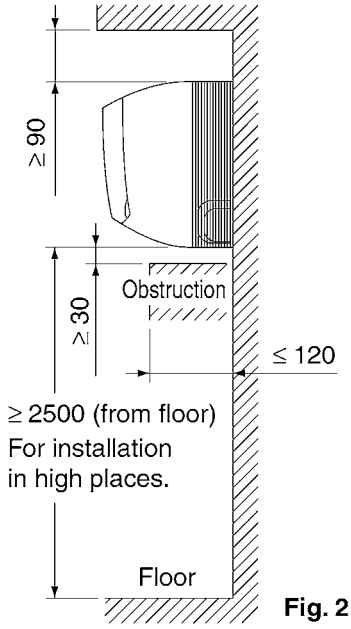

Fig. 2

(2) Consider whether the place where the unit will be installed can support the full weight of the unit, and reinforce it with boards and beams, etc. if needed before proceeding with the installation. Also, reinforce the place to prevent vibration and noise before installing. (The installation pitch can be found on the paper pattern for installation (3), so refer to it when considering the necessity for reinforcing the location.)

(3) The indoor unit may not be directly installed on the wall. Use the attached installation panel (1) before installing the unit.

C : 3P156215-6D

Installation

(1) Open the piping through-hole.

- The refrigerant pipe and drain pipe can be passed out in one of 6 directions: left, bottom-left, back-left, right, bottom-right, and back-right. **(Refer to Fig. 3)**
- Using the paper pattern for installation (3), choose where to pass the piping out and open a through-hole (ϕ80) in the wall.
  Open the hole so that there is a downward slope for the drain piping. (See "DRAIN PIPING WORK")

(2) Remove the installation panel (1) from the unit and attach to the wall.

(The installation panel is temporarily attached to the unit with screw. (In case of 20-32 type))
(Refer to Fig. 3)

(a) Check the location for the hole using the included paper pattern for installation (3).
- Choose a location so that there is at least a 90 mm gap between the ceiling and the main unit.

(b) Temporarily attach the installation panel (1) at the temporary-securing position on the paper pattern for installation (3) and use a level to make sure the drain hose is either level or tilted slightly downward.

(c) Secure the installation panel (1) to the wall using either screws or bolts.
- If using the attachment screws for the installation panel (2), attach using at least 4 screws on either side (for a total of 8 screws (20-32 type), 9 screws (40-63 type)) of the recommended installation cleat position on the included paper pattern for installation (3).
- If using bolts, attach using a M8 - M10 bolt (for a total of 2 bolts) on either side.
- If dealing with concrete, use commercially available foundation bolts (M8 - M10).

(3) If using the left, bottom-left, right, or bottom-right positions for the piping, cut out the through-hole for the piping in the front grill. (Refer to Fig. 4)

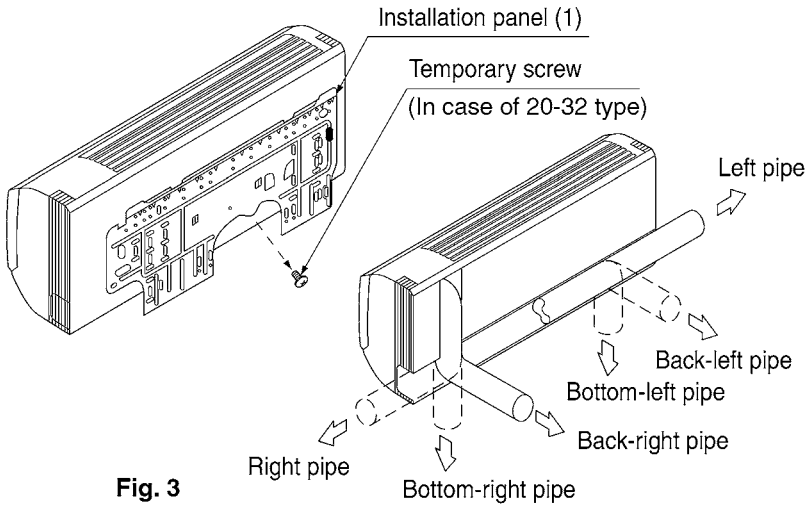

Fig. 3

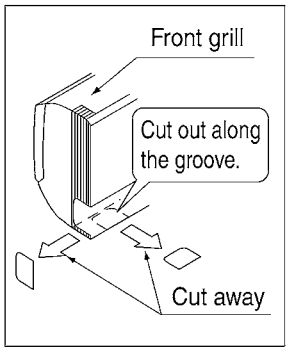

Fig. 4

(4) Remove the front panel and the service lid. (Refer to Fig. 5)

< How to remove the front panel and service lid >

(1) Open the front panel to the point where it stops.

(2) Push the axes on either side of the front panel towards the center of the main unit and remove. (You can also remove it by sliding the front panel either to the left or right and pulling it forward.)

(3) Remove the screw from the service lid and pull the handle forward.

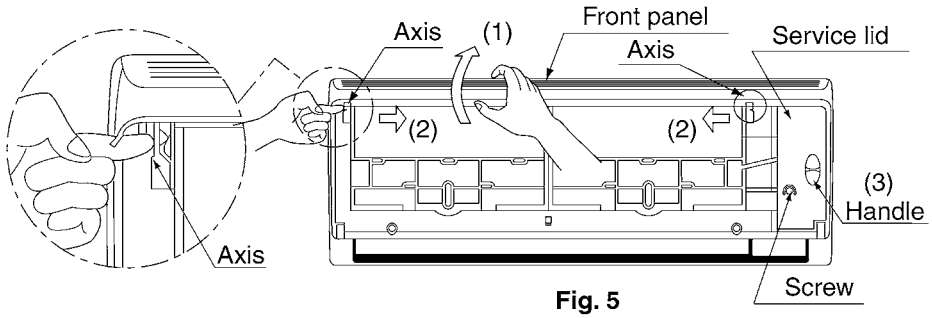

Fig. 5

C : 3P156215-6D

(5) Point the pipe in the direction it will be passed out.

For right, bottom-right, and back-right piping (Refer to Fig. 6)

- Wrap the drain hose and the refrigerant piping together with the insulating tape (4) so that the drain hose is below the refrigerant piping.

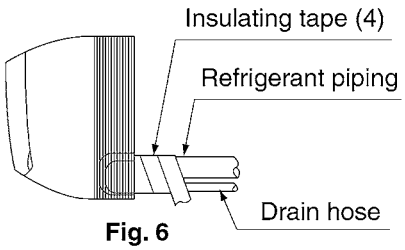

Fig. 6

For left, bottom-left, and left-back piping

- Remove the front grill. **(Refer to Fig. 7)**

< How to remove the front grill >

Remove the front grill as described below when securing the indoor unit with screws or when attaching Optional Accessories (wireless remote controller, adapter PC board, etc.).

(1) Remove the front panel.

(2) Remove the screws (2 places in case of FXA(Q)20,25,32 type/3 places in case of FXA(Q)40,50,63 type) securing the front grill.

(3) Remove the tabs (3 places) securing the front grill by pushing them in the direction of the arrows.

(4) Making sure not to catch the horizontal flaps, remove the front grill by pulling in the direction of the arrow.

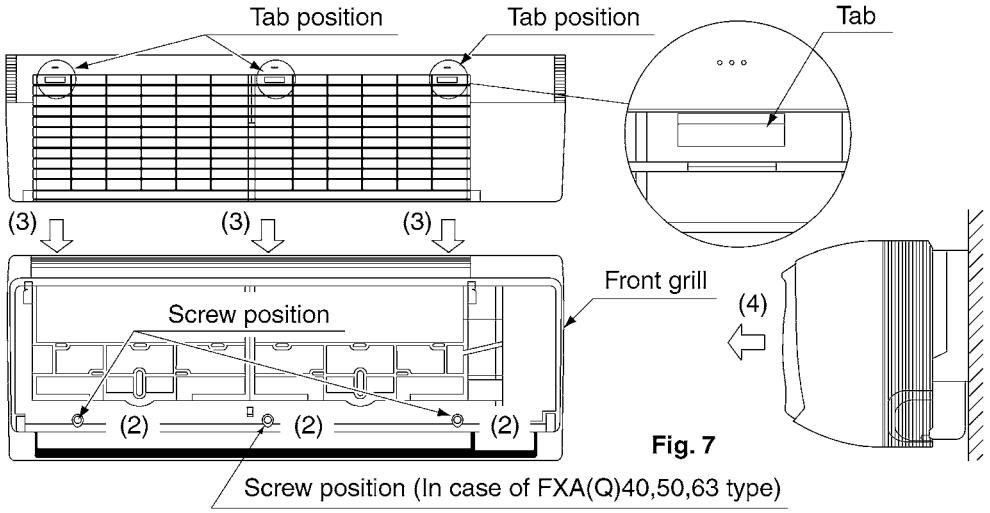

Fig. 7

- Remove the drain plug, the insulation tubing, and the drain hose from the drain pan and replace. **(Refer to Fig. 8)**
- Connect the local refrigerant piping ahead of time, matching it to the liquid pipe and gas pipe marks engraved on the installation panel (1).

< Replacing the drain hose and drain plug >

(1) Remove the drain plug and insulation tubing.
(2) Remove the drain hose and replace onto the left side.
(3) Replace the drain plug and the insulation tubing onto the right side.

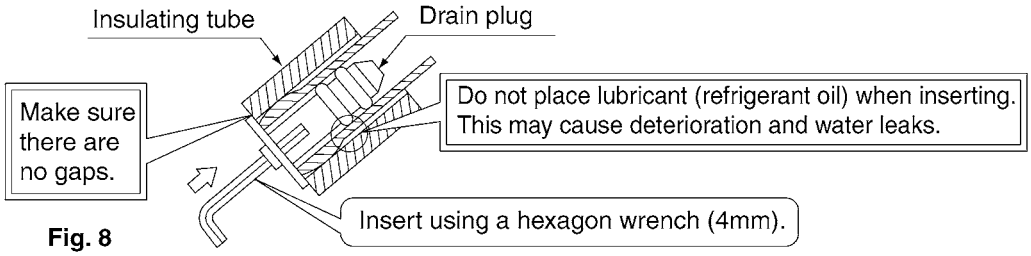

Fig. 8

C : 3P156215-6D

(6) Hook the indoor unit onto the installation panel. (Refer to Fig. 9)

- Placing buffering material between the wall and the indoor unit at this time will make work easier.

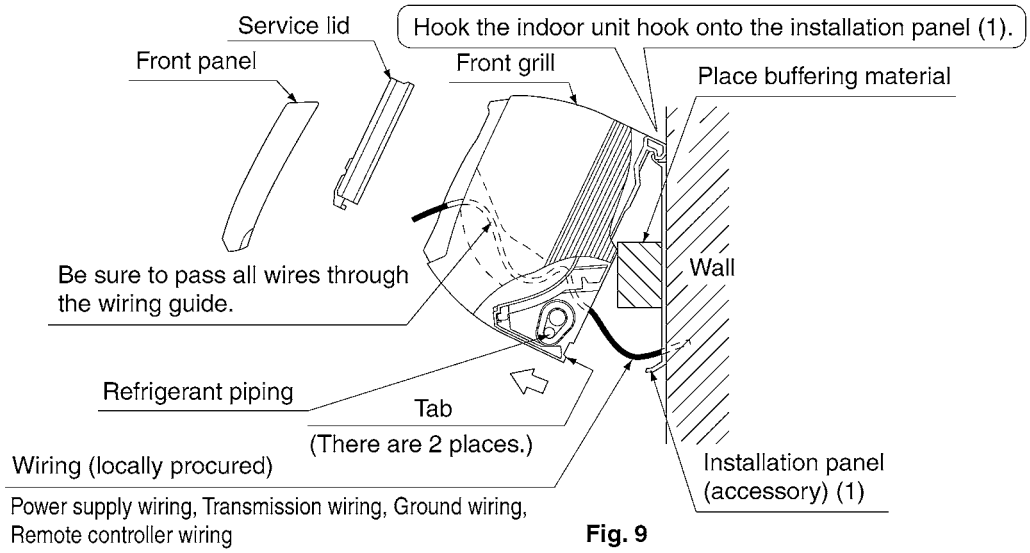

Fig. 9

For right, bottom-right, and back-right piping

- Pass the drain hose and the refrigerant piping to the wall.

(7) Pass power supply wiring, transmission wiring, ground wiring, and remote controller wiring through the wiring guide in through the back of the indoor unit and to the front.

(8) Connect the piping. (See Fig. 10)

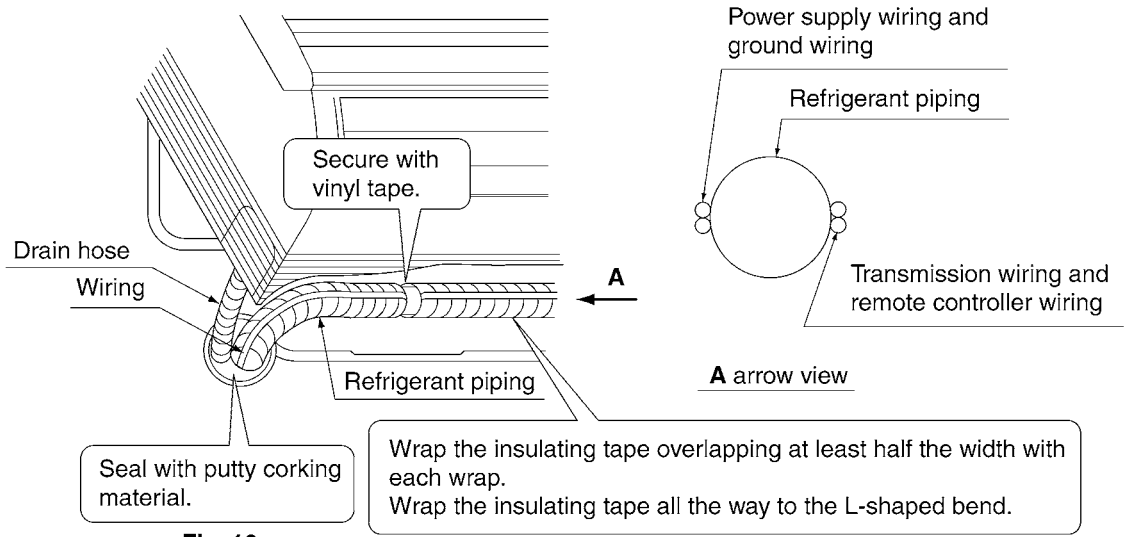

Fig. 10

- To avoid the influence of noise from the power supply line on the transmission wiring and the remote controller wiring, these wirings must be kept as far as possible from the power/ground wirings. As shown in the figure, keep the power supply wiring and the ground wiring together. Keep the transmission and remote controller wirings together and route them maintaining a good distance from the power supply/ground wirings (that is, on the other side of the power supply/ground wirings). Then, fix them securely on the refrigerant pipe.
- Seal the piping through-hole with putty corking material.

(9) Push on both bottom edges of the indoor unit using both hands and hook the tab on the back of the indoor unit onto the installation panel (1). (Refer to Fig. 9)

- At this time remove the buffering material placed in step (6).

C : 3P156215-6D

- Make sure power supply wiring, transmission wiring, ground wiring and remote controller wiring are not caught inside the indoor unit.

■ When screwing in the indoor unit

- Remove the front grill. **(Refer to Fig. 7)**
- Secure the indoor unit to the installation panel (1) with the securing screws (6). **(Refer to Fig. 11)**

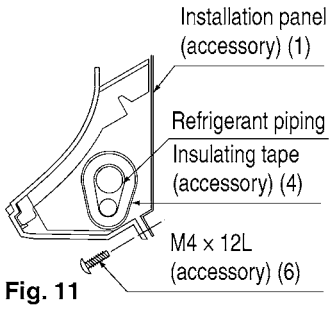

Fig. 11

C : 3P156215-6D

Drain Piping Work

(1) Install the drain piping. (Refer to Fig. 16)

- The drain pipe should be short with a downward slope and should prevent air pockets from forming.
- Watch out for the points in the figure 16 when performing drain work.

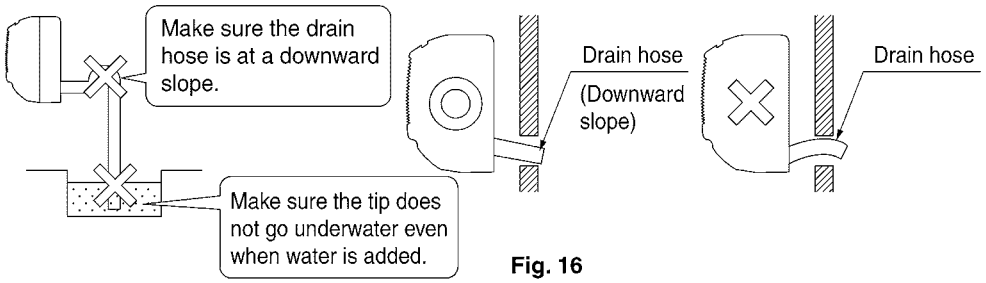

Fig. 16

- When extending the drain hose, use a commercially available drain extension hose, and be sure to insulate the extended section of the drain hose which is indoors. **(Refer to Fig. 17)**

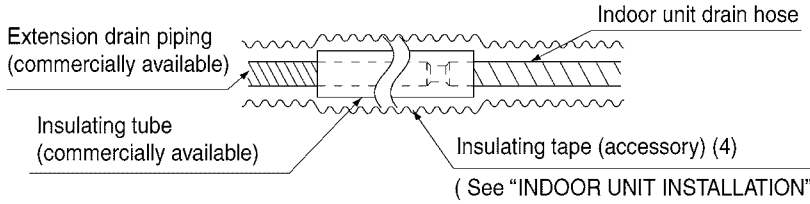

Fig. 17

- Make sure the diameter of the piping is the same as the piping (hard vinyl chloride, nominal diameter 13mm) or bigger.
- When directly connecting a hard vinyl chloride pipe joint (nominal diameter 13mm) to the drain hose connected to the indoor unit (i.e. for embedded piping, etc.), use a commercially available hard vinyl chloride pipe joint (nominal diameter 13mm). **(Refer to Fig. 18)**

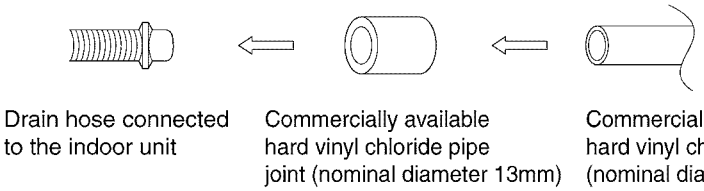

Fig. 18

(2) Make sure the drain works properly.

- After drain work is complete, perform a drain check by opening the front panel, **removing the air filter**, pouring water into the drain pan, and making sure water flows smoothly out of the drain hose. **(Refer to Fig. 19)**

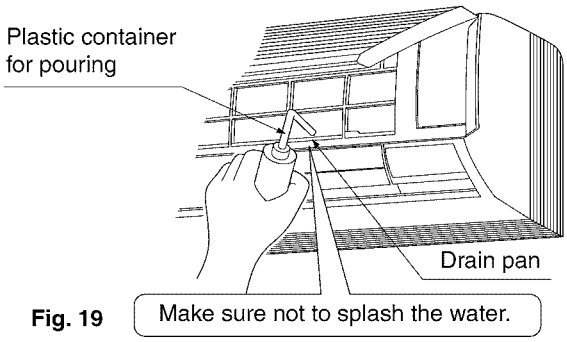

Fig. 19

⚠ CAUTION

Drain piping connections

Do not connect the drain piping directly to sewage pipes that smell of ammonia. The ammonia in the sewage might enter the indoor unit through the drain pipes and corrode the heat exchanger.

Keep in mind that it will become the cause of getting drain pipe blocked if water collects on drain pipe.

C : 3P156215-6D

9

10. Accessories

Standard Accessories

FXAQ20~63MA

Name	(1) Installation panel	(2) Attachment screws for the installation panel	(3) Paper pattern for installation	(4) Insulating tape	(5) Clamp
Quantity	1 set	8 pcs. → FXA(Q)20,25,32 type 9 pcs. → FXA(Q)40,50,63 type	1 pc.	1 pc.	1 large 3 small
Shape	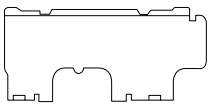	 M4 × 25L	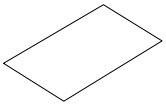	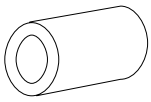	

Name	(6) Securing screws	(Other) • Operation manual • Installation manual
Quantity	2 pcs.	
Shape	 M4 × 12L	

C : 3P156215-6D

Optional Accessories (For Unit)

No.	Type / Item	FXAQ20MA	FXAQ25MA	FXAQ32MA	FXAQ40MA	FXAQ50MA	FXAQ63MA
1	Drain pump kit	K-KDU572CVE					

Optional Accessories (For Controls) : Refer to P.375

Drain Pump Kit — K-KDU572CVE

Specification

Main Applicable Models		20·25·32·40·50·63 Class
Drain pump head (mm)	(Note 1)	1,000
Drain up mechanism	Power supply	Single phase 220-240V/ 220V,50/60Hz
	Power consumption	15.6/14.1(W)
	Operating current	0.26/0.26(A)
	Insulation	Class E
Drain inlet connection pipe diameter		VP20 (Note 2)
Drain exit connection pipe diameter		VP20
Safety device		Float switch
Operating noise (dB)		25
Machine weight (Mass)(kg)		3.0

Note 1: Height from bottom of drain pump kit up to the drain pipe.
Note 2: Connect to the VP13 using the soft reducing socket.

Wiring Diagram

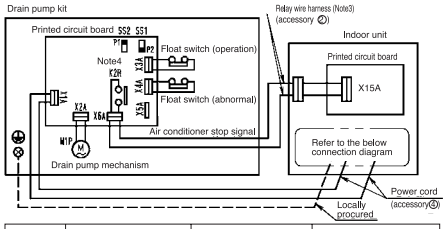

Application model	FAY71LVE FAYP71LV1	FXA20·25·32LVE(C) FXA40·50·63LVE FXAQ20·25·32MVE FXAQ40·50·63MVE	FAQ71BUV1B
Connection diagram	X2M Tes2 ⏚ 1 2 3	X2M ⏚ L N	X2M ⏚ 1 2 3

The earth wire (copper) should be at least 2.0mm² or φ1.6mm.
When the relay wire harness is connected, remove the X15A short-circuit connector.

Note1: Don't forget to turn on the power. If it is not turned on, the air conditioner will perform an error stop and operation will not be possible.
Note2: Make sure that slide switch SS1 on the drain pump kit printed circuit board assembly is set to P2 and slide switch SS2 is set to P1.
Note3: The relay wire harness cannot be extended.
Note4: Turning on the power will close the K2R connector, making is a non-volt B connector.

Component Parts

Name	Shape	Quantity	Name	Shape	Quantity	Name	Shape	Quantity
Drain Pump Kit	①	1	Insulation	⑦ 50X300Xt10	1	Rigid polyvinyl chloride pipe (Note3)	⑬ VP13, 365	1
Relay wire harness	② (Green) (Red)	1	Clamp	⑧	2	Soft drain pipe	⑭ VP20, 200	1
Connecting harness	③ (White)	1	Clamp	⑨	1	Screw Washer	⑮ (White)	1
Power cord	④ (Blue)	1	Soft reducing socket	⑩ VP13	1	Screw	⑯ M5X35	5
Insulation pipe cover	⑤	1	Drain hose	⑪ 150	1	Clamp material	⑰	4
Insulation	⑥ 90X300Xt2	1	Rigid polyvinyl chloride pipe joint	⑫ VP13, 57	1	Paper pattern for Installation	⑱	1
						Installation Manual	⑲	1

Note 3: This pipe must be procured locally for the large capacity machine.

External drawing of drain pump kit and Service space

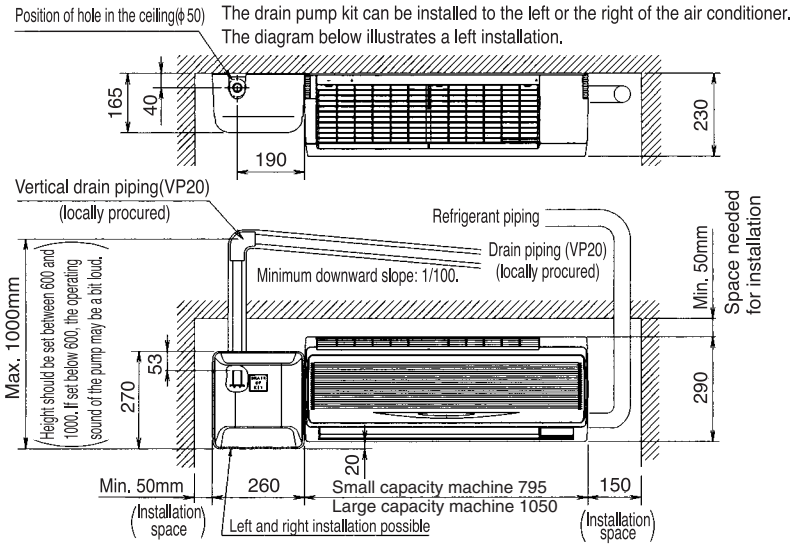

Installation

⚠Caution
- Exit piping parts must be procured locally.
- Be sure to insulate the drain piping.
- Give the horizontal sections on the drain piping a downward slope of at least 1/100 and make sure no air bubbles accumulate.
- Secure long horizontal sections with support clamps to prevent them from shaking.

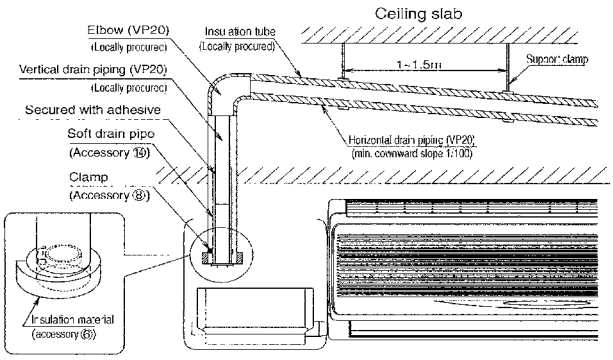

When using centralized piping
- Follow the figure below to make sure there is absolutely no back-up when using centralized piping.

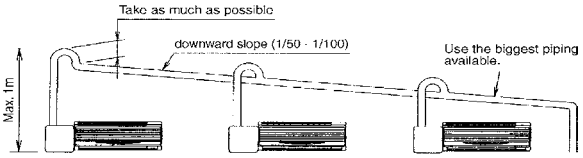

FXLQ-MA / FXNQ-MA Floor Standing Type / Concealed Floor Standing Type

1. Features 264
2. Specifications 265
   2.1 FXLQ-MA 265
   2.2 FXNQ-MA 267
3. Dimensions 269
   3.1 FXLQ-MA 269
   3.2 FXNQ-MA 272
4. Piping Diagrams 275
5. Wiring Diagrams 276
6. Electric Characteristics 277
7. Capacity Tables 278
   7.1 Cooling Capacity 278
   7.2 Heating Capacity 279
8. Sound Levels 280
9. Installation 282
10. Accessories 285

1. Features

Efficient for perimeter zone airconditioning

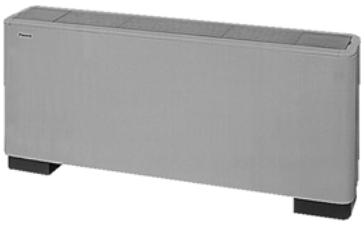

FXLQ-MA

Can be built into peri-counter

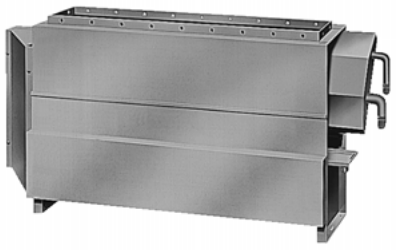

FXNQ-MA

(1) New round-shape adds the gentle feeling to office environment.

- Mild color is applied to the discharge grille and the bottom frame.
- The slimming top plate ensures elegance in dynamics.

(2) Improvement on the installation

- The piping connection work is facilitated drastically.

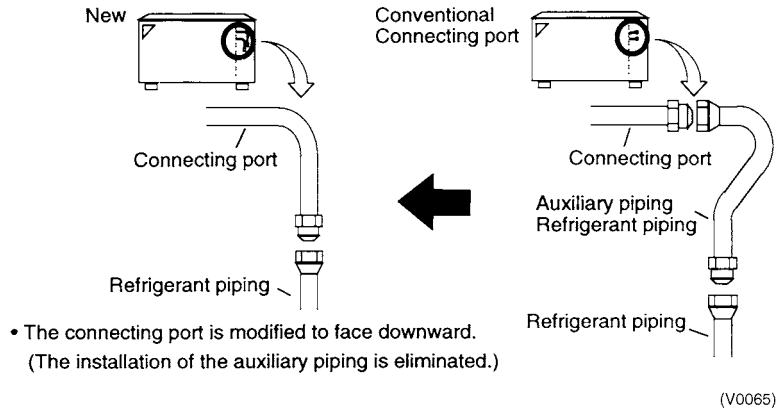

(3) Easy maintenance

When the unit is hung on the wall, it is easy to clean the floor. (Exposed type)

- The maintenance of the discharge grille is improved.
- The interval of filter cleaning is prolonged.

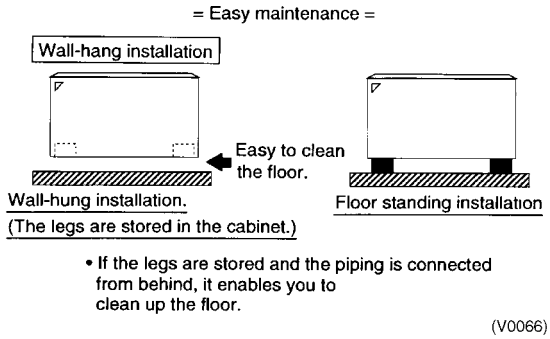

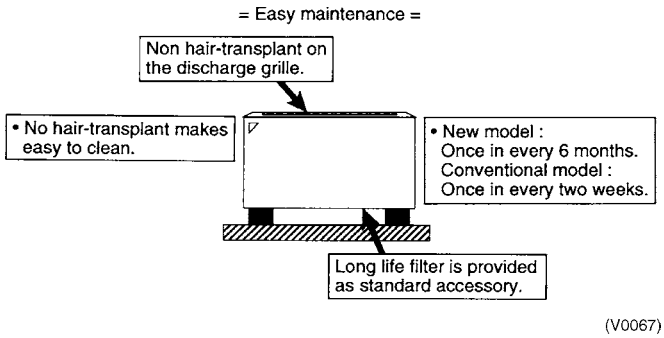

2. Specifications

2.1 FXLQ-MA

Floor Standing Type

Model			FXLQ20MAVE	FXLQ25MAVE	FXLQ32MAVE
∗1 Cooling Capacity (19.5°CWB)		kcal/h	2,000	2,500	3,200
		Btu/h	7,800	9,900	12,600
		kW	2.3	2.9	3.7
∗2 Cooling Capacity (19.0°CWB)		kW	2.2	2.8	3.6
∗3 Heating Capacity		kcal/h	2,200	2,800	3,400
		Btu/h	8,500	10,900	13,600
		kW	2.5	3.2	4.0
Casing Color			Ivory White (5Y7.5/1)	Ivory White (5Y7.5/1)	Ivory White (5Y7.5/1)
Dimensions: (H×W×D)		mm	600×1,000×222	600×1,000×222	600×1,140×222
Coil (Cross Fin Coil)	Rows×Stages×Fin Pitch	mm	3×14×1.5	3×14×1.5	3×14×1.5
	Face Area	m²	0.159	0.159	0.200
Fan	Model		D14B20	D14B20	2D14B13
	Type		Sirocco Fan	Sirocco Fan	Sirocco Fan
	Motor Output × Number of Units	W	15×1	15×1	25×1
	Air Flow Rate (H/L)	m³/min	7/6	7/6	8/6
		cfm	247/212	247/212	282/212
	Drive		Direct Drive	Direct Drive	Direct Drive
Temperature Control			Microprocessor Thermostat for Cooling and Heating	Microprocessor Thermostat for Cooling and Heating	Microprocessor Thermostat for Cooling and Heating
Sound Absorbing Thermal Insulation Material			Glass Fiber/ Urethane Foam	Glass Fiber/ Urethane Foam	Glass Fiber/ Urethane Foam
Air Filter			Resin Net (with Mold Resistant)	Resin Net (with Mold Resistant)	Resin Net (with Mold Resistant)
Piping Connections	Liquid Pipes	mm	ϕ6.4 (Flare Connection)	ϕ6.4 (Flare Connection)	ϕ6.4 (Flare Connection)
	Gas Pipes	mm	ϕ12.7 (Flare Connection)	ϕ12.7 (Flare Connection)	ϕ12.7 (Flare Connection)
	Drain Pipe	mm	ϕ21 O.D (Vinyl Chloride)	ϕ21 O.D (Vinyl Chloride)	ϕ21 O.D (Vinyl Chloride)
Machine Weight (Mass)		kg	25	25	30
∗5 Sound Level (H/L) (220V)		dBA	35/32	35/32	35/32
Safety Devices			Fuse. Thermal Protector for Fan Motor.	Fuse. Thermal Protector for Fan Motor.	Fuse. Thermal Protector for Fan Motor.
Refrigerant Control			Electronic Expansion Valve	Electronic Expansion Valve	Electronic Expansion Valve
Connectable Outdoor Unit			R-410A P Series	R-410A P Series	R-410A P Series
Standard Accessories			Operation Manual. Installation Manual. Insulation for Fitting. Drain Hose. Clamps. Screws. Washers. Level Adjustment Screw.	Operation Manual. Installation Manual. Insulation for Fitting. Drain Hose. Clamps. Screws. Washers. Level Adjustment Screw.	Operation Manual. Installation Manual. Insulation for Fitting. Drain Hose. Clamps. Screws. Washers. Level Adjustment Screw.
Drawing No.			C : 3D038816A		

Note:

∗1 Indoor temp. : 27°CDB, 19.5°CWB / outdoor temp. : 35°CDB / Equivalent piping length : 7.5 m, level difference : 0 m.
∗2 Indoor temp. : 27°CDB, 19.0°CWB / outdoor temp. : 35°CDB / Equivalent piping length : 7.5 m, level difference : 0 m.
∗3 Indoor temp. : 20°CDB / outdoor temp. : 7°CDB, 6°CWB / Equivalent piping length : 7.5 m, level difference : 0 m.
4 Capacities are net, including a deduction for cooling (an addition for heating) for indoor fan motor heat.
∗5 Anechoic chamber conversion value, measured at a point 1.5 m in front of the unit at a height of 1.5 m. During actual operation, these values are normally somewhat higher as a result of ambient conditions.
6 Refer to page 277 for Fan Motor Input.

Conversion Formulae
kcal/h=kW×860 Btu/h=kW×3412 cfm=m³/min×35.3

10

Floor Standing Type

Model			FXLQ40MAVE	FXLQ50MAVE	FXLQ63MAVE
∗1 Cooling Capacity (19.5°CWB)		kcal/h	4,000	5,000	6,300
		Btu/h	16,000	19,800	24,900
		kW	4.7	5.8	7.3
∗2 Cooling Capacity (19.0°CWB)		kW	4.5	5.6	7.1
∗3 Heating Capacity		kcal/h	4,300	5,400	6,900
		Btu/h	17,100	21,500	27,300
		kW	5.0	6.3	8.0
Casing Color			Ivory White (5Y7.5/1)	Ivory White (5Y7.5/1)	Ivory White (5Y7.5/1)
Dimensions: (H×W×D)		mm	600×1,140×222	600×1,420×222	600×1,420×222
Coil (Cross Fin Coil)	Rows×Stages×Fin Pitch	mm	3×14×1.5	3×14×1.5	3×14×1.5
	Face Area	m^2	0.200	0.282	0.282
Fan	Model		2D14B13	2D14B20	2D14B20
	Type		Sirocco Fan	Sirocco Fan	Sirocco Fan
	Motor Output × Number of Units	W	25×1	35×1	35×1
	Air Flow Rate (H/L)	m^3/min	11/8.5	14/11	16/12
		cfm	388/300	494/388	565/424
	Drive		Direct Drive	Direct Drive	Direct Drive
Temperature Control			Microprocessor Thermostat for Cooling and Heating	Microprocessor Thermostat for Cooling and Heating	Microprocessor Thermostat for Cooling and Heating
Sound Absorbing Thermal Insulation Material			Glass Fiber/ Urethane Foam	Glass Fiber/ Urethane Foam	Glass Fiber/ Urethane Foam
Air Filter			Resin Net (with Mold Resistant)	Resin Net (with Mold Resistant)	Resin Net (with Mold Resistant)
Piping Connections	Liquid Pipes	mm	ϕ6.4 (Flare Connection)	ϕ6.4 (Flare Connection)	ϕ9.5 (Flare Connection)
	Gas Pipes	mm	ϕ12.7 (Flare Connection)	ϕ12.7 (Flare Connection)	ϕ15.9 (Flare Connection)
	Drain Pipe	mm	ϕ21 O.D (Vinyl Chloride)	ϕ21 O.D (Vinyl Chloride)	ϕ21 O.D (Vinyl Chloride)
Machine Weight (Mass)		kg	30	36	36
∗5 Sound Level (H/L) (220V)		dBA	38/33	39/34	40/35
Safety Devices			Fuse. Thermal Protector for Fan Motor.	Fuse. Thermal Protector for Fan Motor.	Fuse. Thermal Protector for Fan Motor.
Refrigerant Control			Electronic Expansion Valve	Electronic Expansion Valve	Electronic Expansion Valve
Connectable Outdoor Unit			R-410A P Series	R-410A P Series	R-410A P Series
Standard Accessories			Operation Manual. Installation Manual. Insulation for Fitting. Drain Hose. Clamps. Screws. Washers. Level Adjustment Screw.	Operation Manual. Installation Manual. Insulation for Fitting. Drain Hose. Clamps. Screws. Washers. Level Adjustment Screw.	Operation Manual. Installation Manual. Insulation for Fitting. Drain Hose. Clamps. Screws. Washers. Level Adjustment Screw.
Drawing No.			C : 3D038816A		

Note:

∗1 Indoor temp. : 27°CDB, 19.5°CWB / outdoor temp. : 35°CDB / Equivalent piping length : 7.5 m, level difference : 0 m.
∗2 Indoor temp. : 27°CDB, 19.0°CWB / outdoor temp. : 35°CDB / Equivalent piping length : 7.5 m, level difference : 0 m.
∗3 Indoor temp. : 20°CDB / outdoor temp. : 7°CDB, 6°CWB / Equivalent piping length : 7.5 m, level difference : 0 m.
4 Capacities are net, including a deduction for cooling (an addition for heating) for indoor fan motor heat.
∗5 Anechoic chamber conversion value, measured at a point 1.5 m in front of the unit at a height of 1.5 m. During actual operation, these values are normally somewhat higher as a result of ambient conditions.
6 Refer to page 277 for Fan Motor Input.

Conversion Formulae
kcal/h=kW×860 Btu/h=kW×3412 cfm=m^3/min×35.3

2.2 FXNQ-MA

Concealed Floor Standing Type

Model			FXNQ20MAVE	FXNQ25MAVE	FXNQ32MAVE
∗1 Cooling Capacity (19.5°CWB)		kcal/h	2,000	2,500	3,200
		Btu/h	7,800	9,900	12,600
		kW	2.3	2.9	3.7
∗2 Cooling Capacity (19.0°CWB)		kW	2.2	2.8	3.6
∗3 Heating Capacity		kcal/h	2,200	2,800	3,400
		Btu/h	8,500	10,900	13,600
		kW	2.5	3.2	4.0
Casing Color			Galvanized Steel Plate	Galvanized Steel Plate	Galvanized Steel Plate
Dimensions: (H×W×D)		mm	610×930×220	610×930×220	610×1,070×220
Coil (Cross Fin Coil)	Rows×Stages×Fin Pitch	mm	3×14×1.5	3×14×1.5	3×14×1.5
	Face Area	m²	0.159	0.159	0.200
Fan	Model		D14B20	D14B20	2D14B13
	Type		Sirocco Fan	Sirocco Fan	Sirocco Fan
	Motor Output × Number of Units	W	15×1	15×1	25×1
	Air Flow Rate (H/L)	m³/min	7/6	7/6	8/6
		cfm	247/212	247/212	282/212
	Drive		Direct Drive	Direct Drive	Direct Drive
Temperature Control			Microprocessor Thermostat for Cooling and Heating	Microprocessor Thermostat for Cooling and Heating	Microprocessor Thermostat for Cooling and Heating
Sound Absorbing Thermal Insulation Material			Glass Fiber/ Urethane Foam	Glass Fiber/ Urethane Foam	Glass Fiber/ Urethane Foam
Air Filter			Resin Net (with Mold Resistant)	Resin Net (with Mold Resistant)	Resin Net (with Mold Resistant)
Piping Connections	Liquid Pipes	mm	ϕ6.4 (Flare Connection)	ϕ6.4 (Flare Connection)	ϕ6.4 (Flare Connection)
	Gas Pipes	mm	ϕ12.7 (Flare Connection)	ϕ12.7 (Flare Connection)	ϕ12.7 (Flare Connection)
	Drain Pipe	mm	ϕ21 O.D (Vinyl Chloride)	ϕ21 O.D (Vinyl Chloride)	ϕ21 O.D (Vinyl Chloride)
Machine Weight (Mass)		kg	19	19	23
∗5 Sound Level (H/L) (220V)		dBA	35/32	35/32	35/32
Safety Devices			Fuse. Thermal Protector for Fan Motor.	Fuse. Thermal Protector for Fan Motor.	Fuse. Thermal Protector for Fan Motor.
Refrigerant Control			Electronic Expansion Valve	Electronic Expansion Valve	Electronic Expansion Valve
Connectable Outdoor Unit			R-410A P Series	R-410A P Series	R-410A P Series
Standard Accessories			Operation Manual. Installation Manual. Insulation for Fitting. Drain Hose. Clamps. Screws. Washers. Level Adjustment Screw.	Operation Manual. Installation Manual. Insulation for Fitting. Drain Hose. Clamps. Screws. Washers. Level Adjustment Screw.	Operation Manual. Installation Manual. Insulation for Fitting. Drain Hose. Clamps. Screws. Washers. Level Adjustment Screw.
Drawing No.			C : 3D038817A		

Note:

∗1 Indoor temp. : 27°CDB, 19.5°CWB / outdoor temp. : 35°CDB / Equivalent piping length : 7.5 m, level difference : 0 m.
∗2 Indoor temp. : 27°CDB, 19.0°CWB / outdoor temp. : 35°CDB / Equivalent piping length : 7.5 m, level difference : 0 m.
∗3 Indoor temp. : 20°CDB / outdoor temp. : 7°CDB, 6°CWB / Equivalent piping length : 7.5 m, level difference : 0 m.
4 Capacities are net, including a deduction for cooling (an addition for heating) for indoor fan motor heat.
∗5 Anechoic chamber conversion value, measured at a point 1.5 m in front of the unit at a height of 1.5 m. During actual operation, these values are normally somewhat higher as a result of ambient conditions.
6 Refer to page 277 for Fan Motor Input.

Conversion Formulae
kcal/h=kW×860 Btu/h=kW×3412 cfm=m³/min×35.3

10

Concealed Floor Standing Type

Model			FXNQ40MAVE	FXNQ50MAVE	FXNQ63MAVE
∗1 Cooling Capacity (19.5°CWB)		kcal/h	4,000	5,000	6,300
		Btu/h	16,000	19,800	24,900
		kW	4.7	5.8	7.3
∗2 Cooling Capacity (19.0°CWB)		kW	4.5	5.6	7.1
∗3 Heating Capacity		kcal/h	4,300	5,400	6,900
		Btu/h	17,100	21,500	27,300
		kW	5.0	6.3	8.0
Casing Color			Galvanized Steel Plate	Galvanized Steel Plate	Galvanized Steel Plate
Dimensions: (H×W×D)		mm	610×1,070×220	610×1,350×220	610×1,350×220
Coil (Cross Fin Coil)	Rows×Stages×Fin Pitch	mm	3×14×1.5	3×14×1.5	3×14×1.5
	Face Area	m^2	0.200	0.282	0.282
Fan	Model		2D14B13	2D14B20	2D14B20
	Type		Sirocco Fan	Sirocco Fan	Sirocco Fan
	Motor Output × Number of Units	W	25×1	35×1	35×1
	Air Flow Rate (H/L)	m^3/min	11/8.5	14/11	16/12
		cfm	388/300	494/388	565/424
	Drive		Direct Drive	Direct Drive	Direct Drive
Temperature Control			Microprocessor Thermostat for Cooling and Heating	Microprocessor Thermostat for Cooling and Heating	Microprocessor Thermostat for Cooling and Heating
Sound Absorbing Thermal Insulation Material			Glass Fiber / Urethane Foam	Glass Fiber / Urethane Foam	Glass Fiber / Urethane Foam
Air Filter			Resin Net (with Mold Resistant)	Resin Net (with Mold Resistant)	Resin Net (with Mold Resistant)
Piping Connections	Liquid Pipes	mm	ϕ6.4 (Flare Connection)	ϕ6.4 (Flare Connection)	ϕ9.5 (Flare Connection)
	Gas Pipes	mm	ϕ12.7 (Flare Connection)	ϕ12.7 (Flare Connection)	ϕ15.9 (Flare Connection)
	Drain Pipe	mm	ϕ21 O.D (Vinyl Chloride)	ϕ21 O.D (Vinyl Chloride)	ϕ21 O.D (Vinyl Chloride)
Machine Weight (Mass)		kg	23	27	27
∗5 Sound Level (H/L) (220V)		dBA	38/33	39/34	40/35
Safety Devices			Fuse. Thermal Protector for Fan Motor.	Fuse. Thermal Protector for Fan Motor.	Fuse. Thermal Protector for Fan Motor.
Refrigerant Control			Electronic Expansion Valve	Electronic Expansion Valve	Electronic Expansion Valve
Connectable Outdoor Unit			R-410A P Series	R-410A P Series	R-410A P Series
Standard Accessories			Operation Manual. Installation Manual. Insulation for Fitting. Drain Hose. Clamps. Screws. Washers. Level Adjustment Screw.	Operation Manual. Installation Manual. Insulation for Fitting. Drain Hose. Clamps. Screws. Washers. Level Adjustment Screw.	Operation Manual. Installation Manual. Insulation for Fitting. Drain Hose. Clamps. Screws. Washers. Level Adjustment Screw.
Drawing No.			C : 3D038817A		

Note:

∗1 Indoor temp. : 27°CDB, 19.5°CWB / outdoor temp. : 35°CDB / Equivalent piping length : 7.5 m, level difference : 0 m.
∗2 Indoor temp. : 27°CDB, 19.0°CWB / outdoor temp. : 35°CDB / Equivalent piping length : 7.5 m, level difference : 0 m.
∗3 Indoor temp. : 20°CDB / outdoor temp. : 7°CDB, 6°CWB / Equivalent piping length : 7.5 m, level difference : 0 m.
4 Capacities are net, including a deduction for cooling (an addition for heating) for indoor fan motor heat.
∗5 Anechoic chamber conversion value, measured at a point 1.5 m in front of the unit at a height of 1.5 m. During actual operation, these values are normally somewhat higher as a result of ambient conditions.
6 Refer to page 277 for Fan Motor Input.

Conversion Formulae
kcal/h=kW×860 Btu/h=kW×3412 cfm=m^3/min×35.3

3. Dimensions

3.1 FXLQ-MA

FXLQ20MA
FXLQ25MA

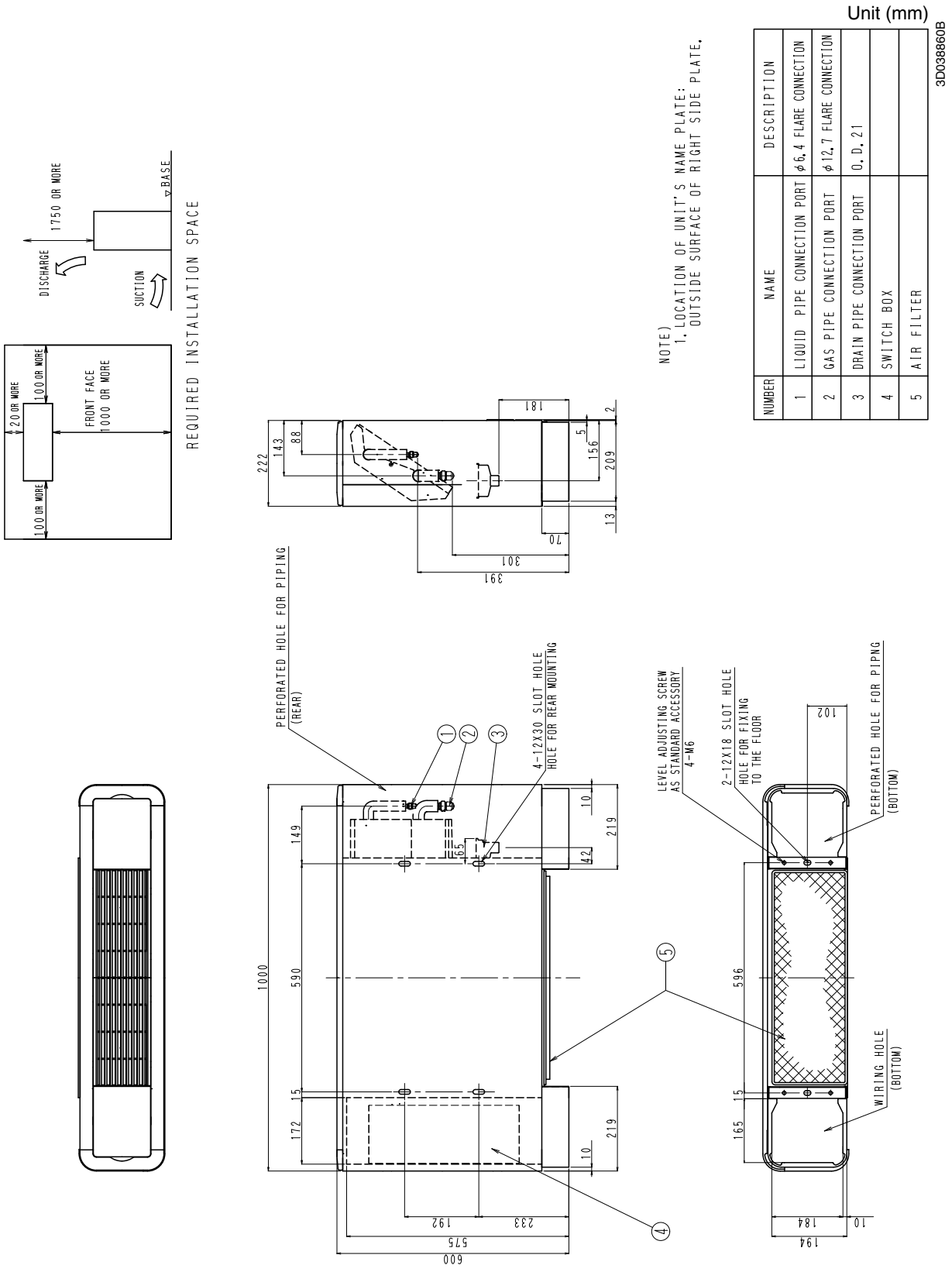

FXLQ32MA
FXLQ40MA

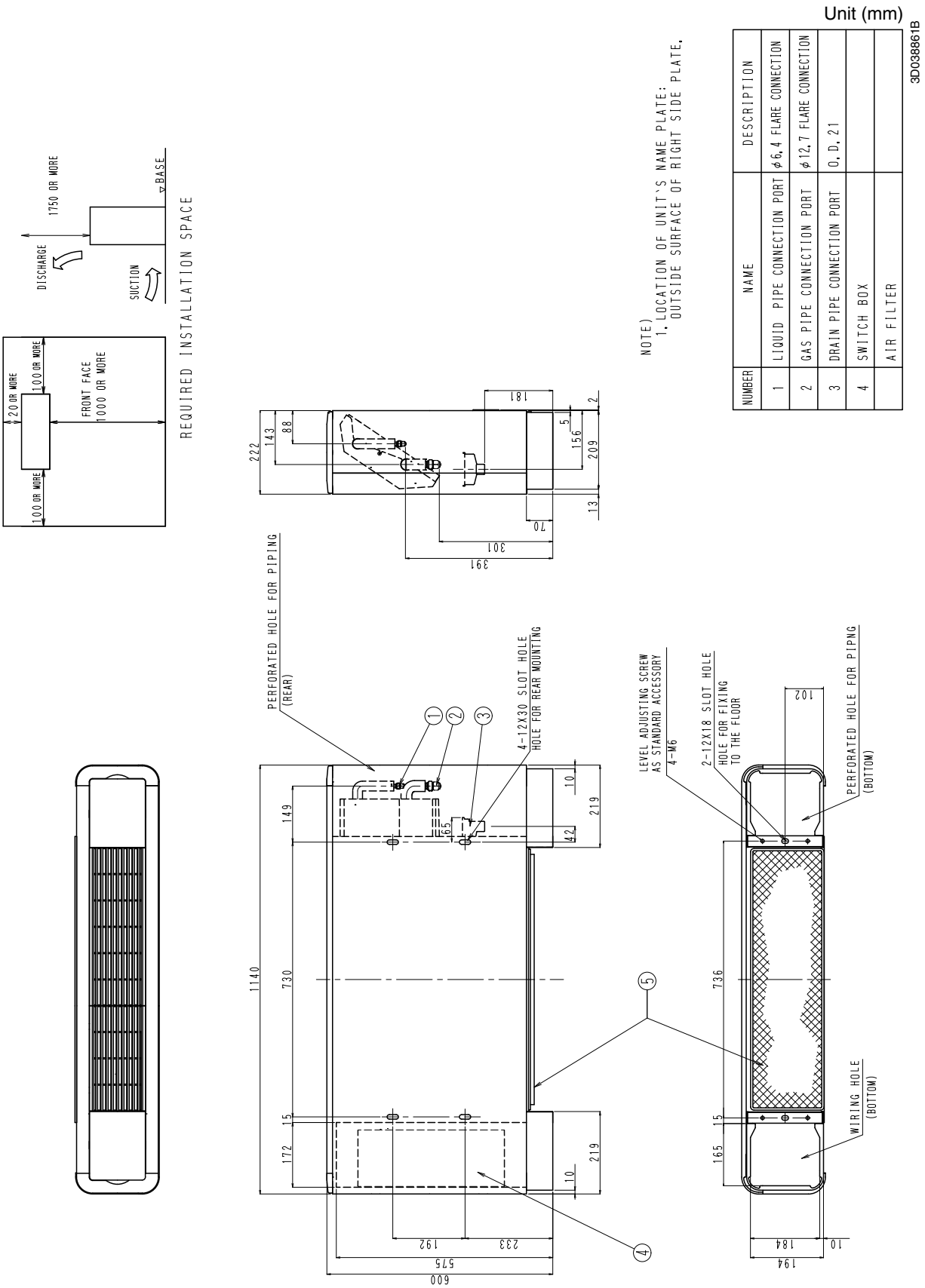

FXLQ50MA
FXLQ63MA

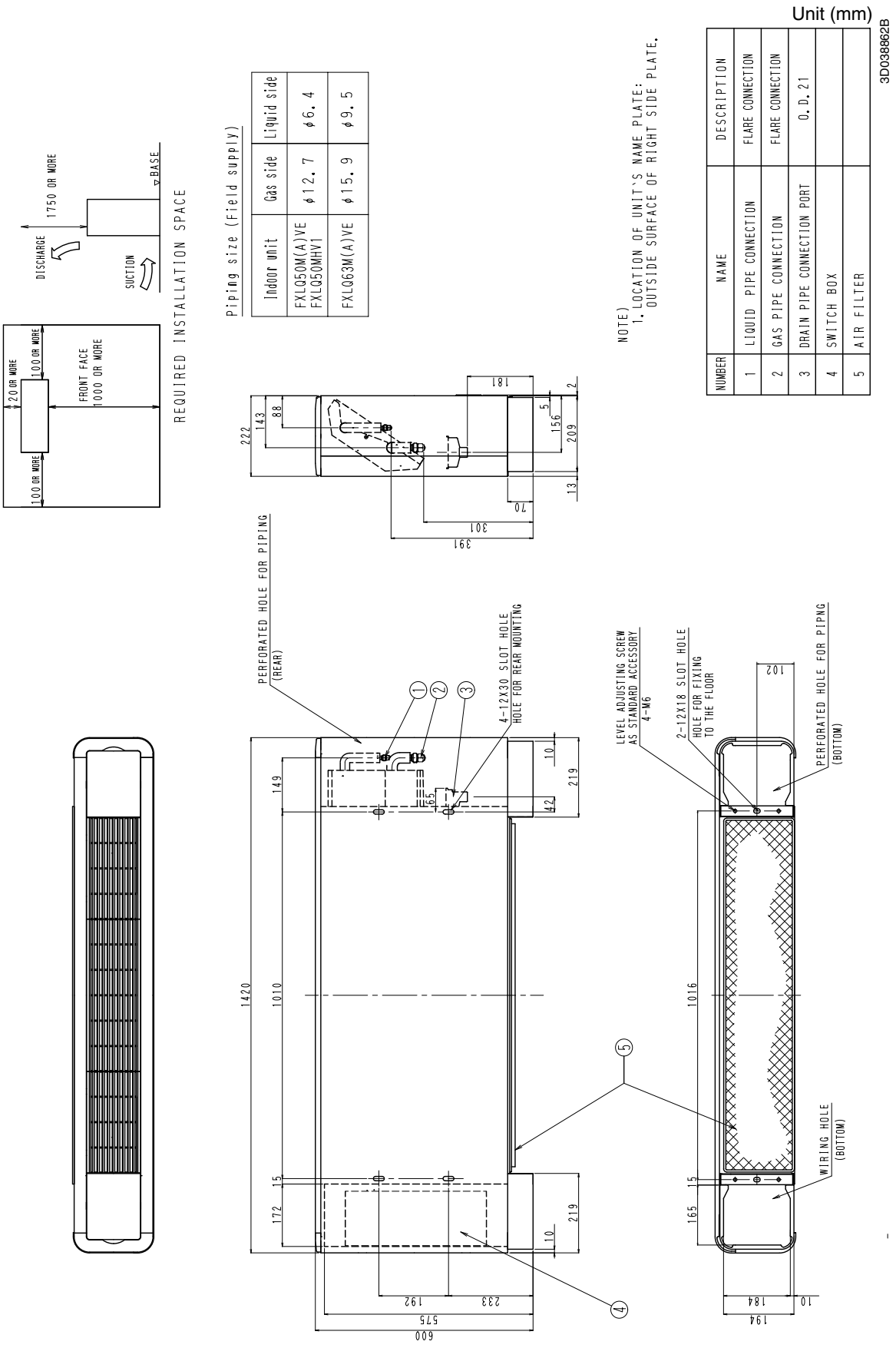

10

3.2 FXNQ-MA

FXNQ20MA
FXNQ25MA

Unit (mm)

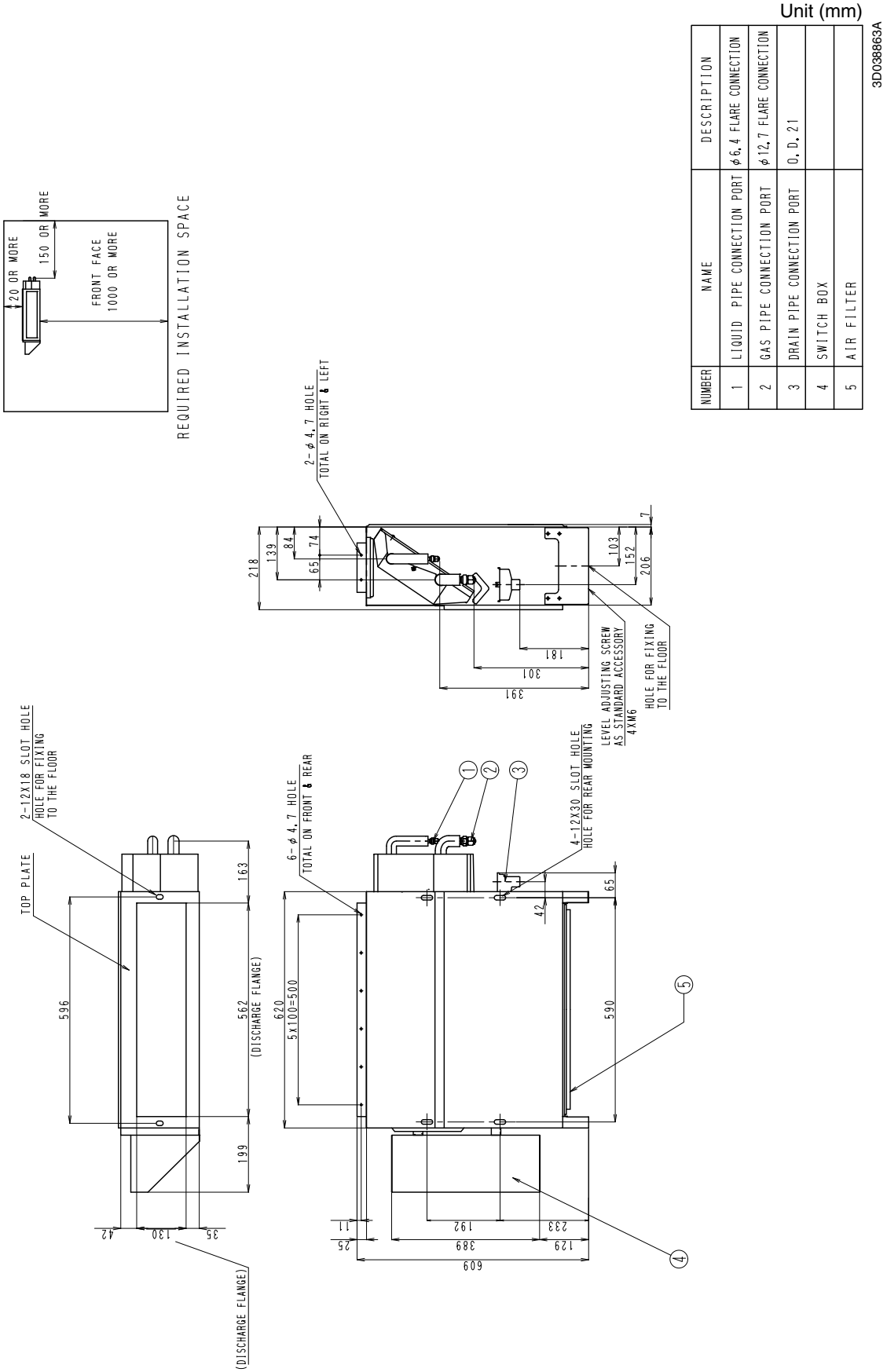

FXNQ32MA
FXNQ40MA

Unit (mm)

3D038864B

NUMBER	NAME	DESCRIPTION
1	LIQUID PIPE CONNECTION PORT	φ6.4 FLARE CONNECTION
2	GAS PIPE CONNECTION PORT	φ12.7 FLARE CONNECTION
3	DRAIN PIPE CONNECTION PORT	O.D.21
4	SWITCH BOX	
5	AIR FILTER	

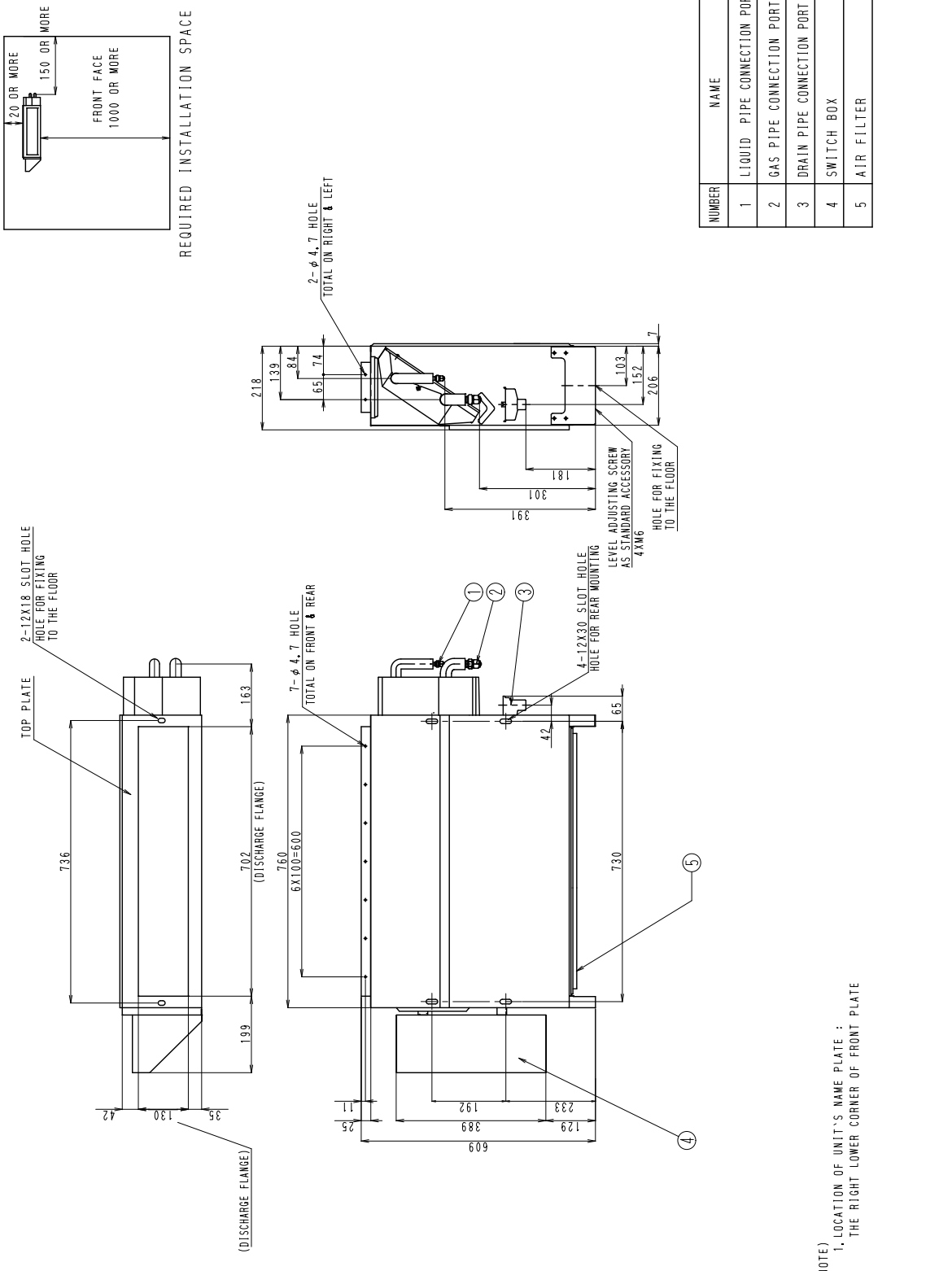

NOTE)
1. LOCATION OF UNIT'S NAME PLATE :
THE RIGHT LOWER CORNER OF FRONT PLATE

10

FXNQ50MA
FXNQ63MA

Unit (mm)

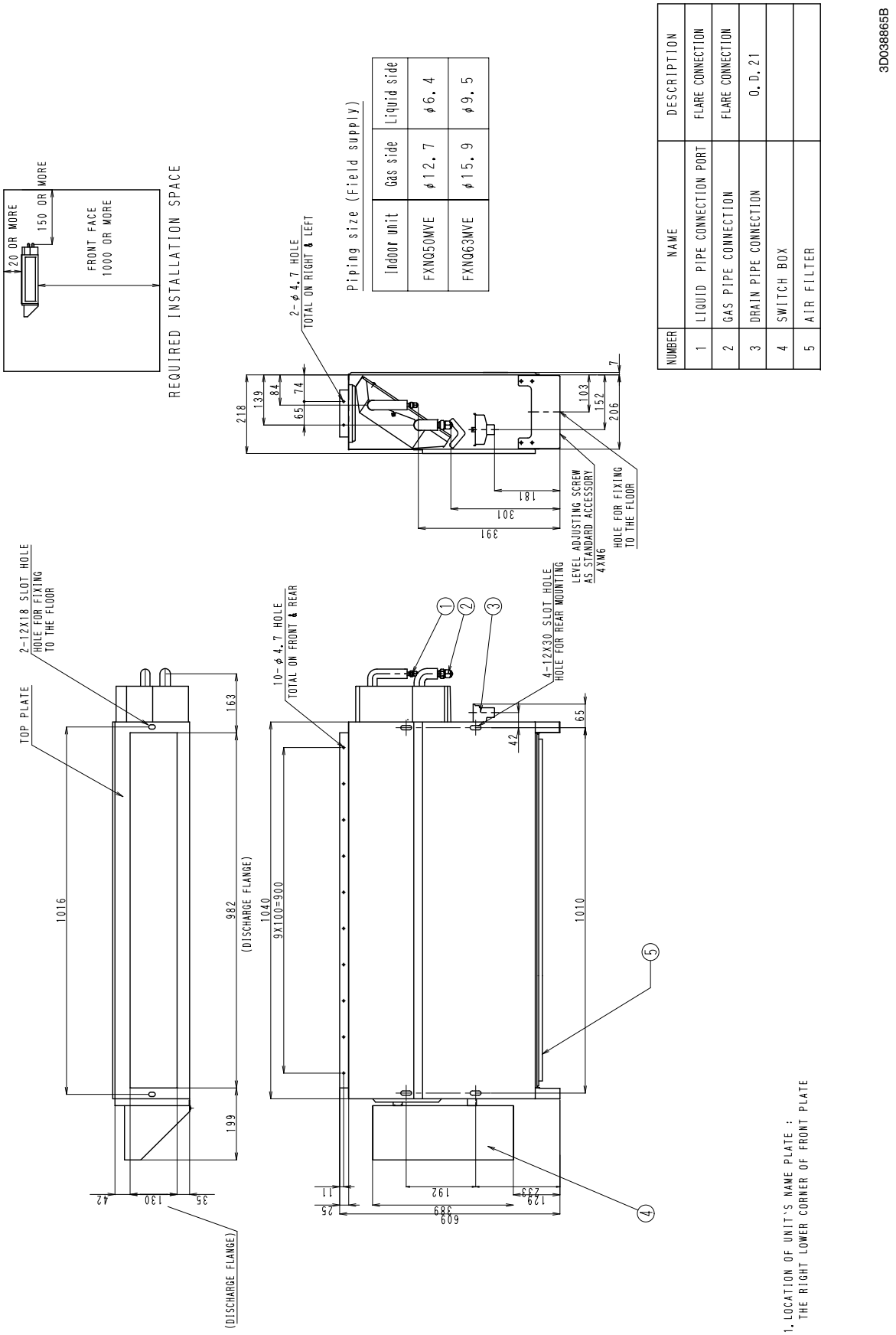

4. Piping Diagrams

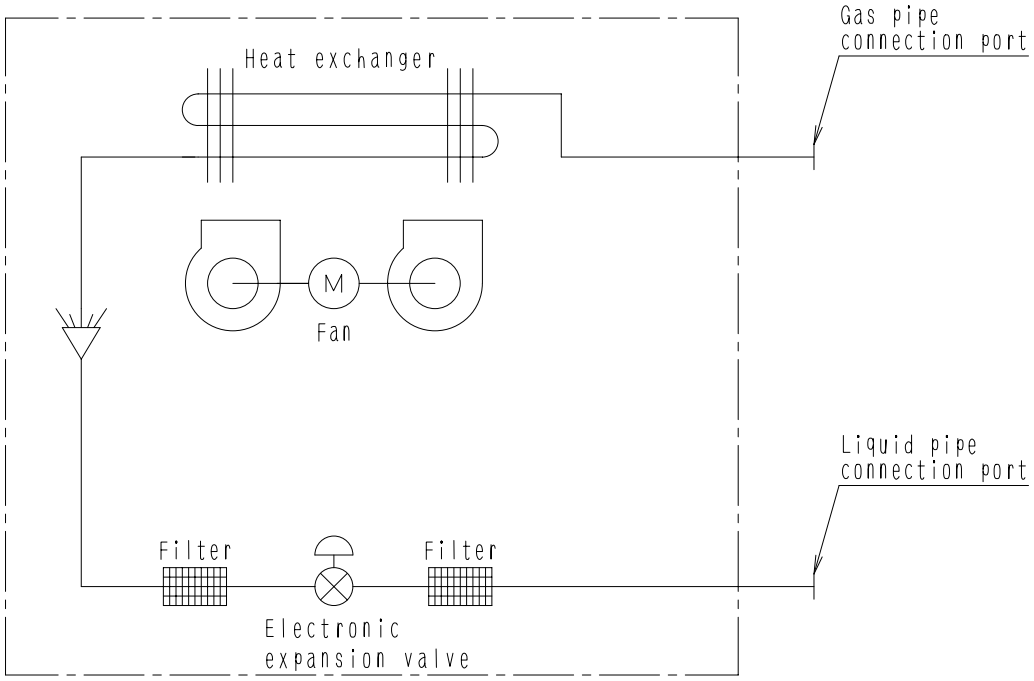

4D034245A

10

■ **Refrigerant pipe connection port diameters**

(mm)

Model	Gas	Liquid
FXLQ20 · 25 · 32 · 40 · 50MA FXNQ20 · 25 · 32 · 40 · 50MA	ϕ12.7	ϕ6.4
FXLQ63MA FXNQ63MA	ϕ15.9	ϕ9.5

5. Wiring Diagrams

FXLQ20 · 25 · 32 · 40 · 50 · 63MAVE
FXNQ20 · 25 · 32 · 40 · 50 · 63MAVE

3D039826D

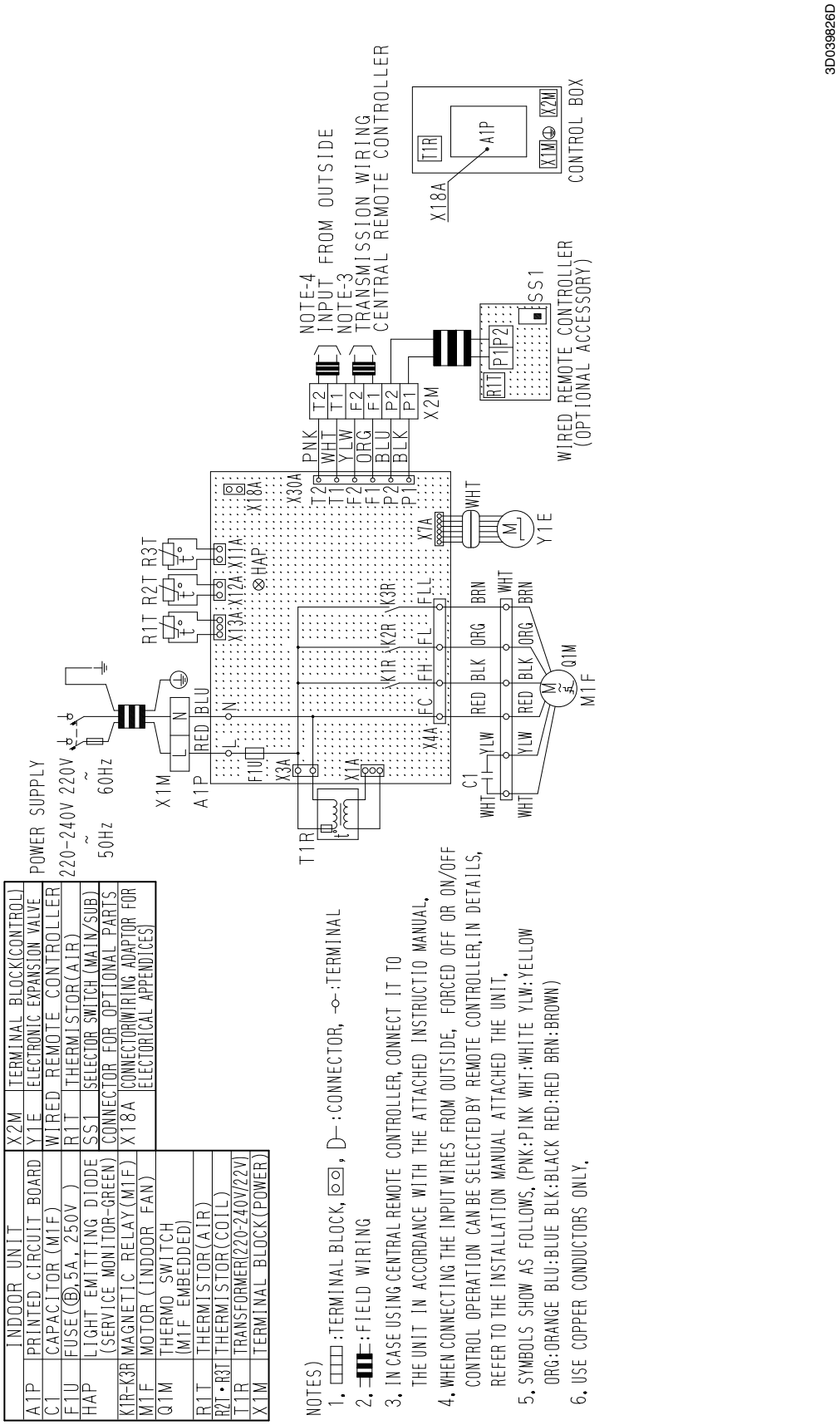

6. Electric Characteristics

Units				Power supply		IFM		Input(W)	
Model	Hz	Volts	Voltage range	MCA	MFA	KW	FLA	Cooling	Heating
FXLQ・FXNQ20MAVE	50	220-240	MAX. 264 Min. 198	0.3	15	0.015	0.2	49	49
FXLQ・FXNQ25MAVE				0.3	15	0.015	0.2	49	49
FXLQ・FXNQ32MAVE				0.6	15	0.025	0.5	90	90
FXLQ・FXNQ40MAVE				0.6	15	0.025	0.5	90	90
FXLQ・FXNQ50MAVE				0.6	15	0.035	0.5	110	110
FXLQ・FXNQ63MAVE				0.6	15	0.035	0.5	110	110
FXLQ・FXNQ20MAVE	60	220	MAX. 242 Min. 198	0.3	15	0.015	0.2	47	47
FXLQ・FXNQ25MAVE				0.3	15	0.015	0.2	47	47
FXLQ・FXNQ32MAVE				0.5	15	0.025	0.4	79	79
FXLQ・FXNQ40MAVE				0.5	15	0.025	0.4	84	84
FXLQ・FXNQ50MAVE				0.6	15	0.035	0.5	105	105
FXLQ・FXNQ63MAVE				0.6	15	0.035	0.5	108	108

Symbols:

MCA : Min. Circuit Amps (A)
MFA : Max. Fuse Amps (See note 5)
KW : Fan Motor Rated Output(KW)
FLA : Full Load Amps(A)
IFM : Indoor Fan Motor

10

Note:

1. Voltage range

   Units are suitable for use on electrical systems where voltage supplied to unit terminals is not below or above listed range limits.

2. Maximum allowable voltage unbalance between phases is 2%.

3. MCA/MFA

   MCA = 1.25 X FLA

   MFA ≦ 4 X FLA

   (Next lower standard fuse rating. Min. 15A)

4. Select wire size based on the MCA.

5. Instead of fuse, use Circuit Breaker.

C : 4D034579B

7. Capacity Tables

7.1 Cooling Capacity

FXLQ-MA / FXNQ-MA [50/60Hz]

Cooling capacity

Unit Size	Outdoor air temp. °CDB	Indoor air temp. 14.0°CWB 20°CDB TC	14.0°CWB 20°CDB SHC	16.0°CWB 23°CDB TC	16.0°CWB 23°CDB SHC	18.0°CWB 26°CDB TC	18.0°CWB 26°CDB SHC	19.0°CWB 27°CDB TC	19.0°CWB 27°CDB SHC	20.0°CWB 28°CDB TC	20.0°CWB 28°CDB SHC	22.0°CWB 30°CDB TC	22.0°CWB 30°CDB SHC	24.0°CWB 32°CDB TC	24.0°CWB 32°CDB SHC
20	10.0	1.5	1.3	1.8	1.5	2.1	1.7	2.2	1.7	2.3	1.8	2.6	1.8	2.9	1.8
	12.0	1.5	1.3	1.8	1.5	2.1	1.7	2.2	1.7	2.3	1.8	2.6	1.8	2.9	1.7
	14.0	1.5	1.3	1.8	1.5	2.1	1.7	2.2	1.7	2.3	1.8	2.6	1.8	2.8	1.7
	16.0	1.5	1.3	1.8	1.5	2.1	1.7	2.2	1.7	2.3	1.8	2.6	1.8	2.8	1.7
	18.0	1.5	1.3	1.8	1.5	2.1	1.7	2.2	1.7	2.3	1.8	2.6	1.8	2.7	1.7
	20.0	1.5	1.3	1.8	1.5	2.1	1.7	2.2	1.7	2.3	1.8	2.6	1.8	2.7	1.6
	21.0	1.5	1.3	1.8	1.5	2.1	1.7	2.2	1.7	2.3	1.8	2.6	1.8	2.7	1.6
	23.0	1.5	1.3	1.8	1.5	2.1	1.7	2.2	1.7	2.3	1.8	2.6	1.8	2.6	1.6
	25.0	1.5	1.3	1.8	1.5	2.1	1.7	2.2	1.7	2.3	1.8	2.6	1.7	2.6	1.6
	27.0	1.5	1.3	1.8	1.5	2.1	1.7	2.2	1.7	2.3	1.8	2.5	1.7	2.5	1.6
	29.0	1.5	1.3	1.8	1.5	2.1	1.7	2.2	1.7	2.3	1.8	2.4	1.7	2.5	1.6
	31.0	1.5	1.3	1.8	1.5	2.1	1.7	2.2	1.7	2.3	1.8	2.4	1.7	2.5	1.6
	33.0	1.5	1.3	1.8	1.5	2.1	1.7	2.2	1.7	2.3	1.8	2.4	1.7	2.4	1.5
	35.0	1.5	1.3	1.8	1.5	2.1	1.7	2.2	1.7	2.3	1.7	2.4	1.6	2.4	1.5
	37.0	1.5	1.3	1.8	1.5	2.1	1.7	2.2	1.7	2.2	1.7	2.3	1.6	2.3	1.5
	39.0	1.5	1.3	1.8	1.5	2.1	1.7	2.2	1.7	2.2	1.7	2.3	1.6	2.3	1.5
25	10.0	1.9	1.6	2.3	1.8	2.6	2.0	2.8	2.0	3.0	2.1	3.4	2.1	3.7	2.1
	12.0	1.9	1.6	2.3	1.8	2.6	2.0	2.8	2.1	3.0	2.1	3.4	2.1	3.6	2.1
	14.0	1.9	1.6	2.3	1.8	2.6	2.0	2.8	2.1	3.0	2.1	3.4	2.1	3.6	2.1
	16.0	1.9	1.6	2.3	1.8	2.6	2.0	2.8	2.1	3.0	2.1	3.4	2.1	3.5	2.1
	18.0	1.9	1.6	2.3	1.8	2.6	2.0	2.8	2.1	3.0	2.1	3.4	2.1	3.5	2.0
	20.0	1.9	1.6	2.3	1.8	2.6	2.0	2.8	2.1	3.0	2.1	3.4	2.1	3.4	2.0
	21.0	1.9	1.6	2.3	1.8	2.6	2.0	2.8	2.1	3.0	2.1	3.4	2.1	3.4	2.0
	23.0	1.9	1.6	2.3	1.8	2.6	2.0	2.8	2.1	3.0	2.1	3.3	2.1	3.3	2.0
	25.0	1.9	1.6	2.3	1.8	2.6	2.0	2.8	2.1	3.0	2.1	3.3	2.1	3.3	1.9
	27.0	1.9	1.6	2.3	1.8	2.6	2.0	2.8	2.1	3.0	2.1	3.2	2.1	3.2	1.9
	29.0	1.9	1.6	2.3	1.8	2.6	2.0	2.8	2.1	3.0	2.1	3.2	2.0	3.2	1.9
	31.0	1.9	1.6	2.3	1.8	2.6	2.0	2.8	2.1	3.0	2.1	3.1	2.0	3.2	1.9
	33.0	1.9	1.6	2.3	1.8	2.6	2.0	2.8	2.1	3.0	2.1	3.1	2.0	3.1	1.9
	35.0	1.9	1.6	2.3	1.8	2.6	2.0	2.8	2.1	3.0	2.1	3.0	2.0	3.1	1.9
	37.0	1.9	1.6	2.3	1.8	2.6	2.0	2.8	2.1	2.9	2.0	3.0	2.0	3.0	1.9
	39.0	1.9	1.6	2.3	1.8	2.6	2.0	2.8	2.1	2.9	2.0	2.9	2.0	3.0	1.9
32	10.0	2.4	2.1	2.9	2.2	3.4	2.5	3.6	2.5	3.8	2.6	4.3	2.6	4.7	2.6
	12.0	2.4	2.1	2.9	2.2	3.4	2.5	3.6	2.5	3.8	2.6	4.3	2.6	4.7	2.6
	14.0	2.4	2.1	2.9	2.2	3.4	2.5	3.6	2.5	3.8	2.6	4.3	2.6	4.6	2.5
	16.0	2.4	2.1	2.9	2.2	3.4	2.5	3.6	2.5	3.8	2.6	4.3	2.6	4.6	2.5
	18.0	2.4	2.1	2.9	2.2	3.4	2.5	3.6	2.5	3.8	2.6	4.3	2.6	4.5	2.5
	20.0	2.4	2.1	2.9	2.2	3.4	2.5	3.6	2.5	3.8	2.6	4.3	2.6	4.4	2.5
	21.0	2.4	2.1	2.9	2.2	3.4	2.5	3.6	2.5	3.8	2.6	4.3	2.6	4.4	2.5
	23.0	2.4	2.1	2.9	2.2	3.4	2.5	3.6	2.5	3.8	2.6	4.2	2.6	4.3	2.4
	25.0	2.4	2.1	2.9	2.2	3.4	2.5	3.6	2.5	3.8	2.6	4.2	2.5	4.2	2.4
	27.0	2.4	2.1	2.9	2.2	3.4	2.5	3.6	2.5	3.8	2.6	4.1	2.5	4.2	2.4
	29.0	2.4	2.1	2.9	2.2	3.4	2.5	3.6	2.5	3.8	2.6	4.0	2.5	4.1	2.4
	31.0	2.4	2.1	2.9	2.2	3.4	2.5	3.6	2.5	3.8	2.6	3.9	2.4	4.0	2.3
	33.0	2.4	2.1	2.9	2.2	3.4	2.5	3.6	2.5	3.8	2.5	3.9	2.4	4.0	2.3
	35.0	2.4	2.1	2.9	2.2	3.4	2.5	3.6	2.5	3.7	2.5	3.8	2.4	3.9	2.3
	39.0	2.4	2.1	2.9	2.2	3.4	2.5	3.6	2.6	3.7	2.5	3.8	2.4	3.8	2.3

Cooling capacity

Unit Size	Outdoor air temp. °CDB	Indoor air temp. 14.0°CWB 20°CDB TC	14.0°CWB 20°CDB SHC	16.0°CWB 23°CDB TC	16.0°CWB 23°CDB SHC	18.0°CWB 26°CDB TC	18.0°CWB 26°CDB SHC	19.0°CWB 27°CDB TC	19.0°CWB 27°CDB SHC	20.0°CWB 28°CDB TC	20.0°CWB 28°CDB SHC	22.0°CWB 30°CDB TC	22.0°CWB 30°CDB SHC	24.0°CWB 32°CDB TC	24.0°CWB 32°CDB SHC
40	10.0	3.0	2.5	3.6	2.7	4.2	3.1	4.5	3.1	4.8	3.2	5.4	3.3	5.9	3.3
	12.0	3.0	2.5	3.6	2.7	4.2	3.1	4.5	3.1	4.8	3.2	5.4	3.3	5.8	3.3
	14.0	3.0	2.5	3.6	2.7	4.2	3.1	4.5	3.1	4.8	3.2	5.4	3.3	5.8	3.2
	16.0	3.0	2.5	3.6	2.7	4.2	3.1	4.5	3.1	4.8	3.2	5.4	3.3	5.7	3.2
	18.0	3.0	2.5	3.6	2.7	4.2	3.1	4.5	3.1	4.8	3.2	5.4	3.3	5.6	3.1
	20.0	3.0	2.5	3.6	2.7	4.2	3.1	4.5	3.1	4.8	3.2	5.4	3.3	5.5	3.1
	21.0	3.0	2.5	3.6	2.7	4.2	3.1	4.5	3.1	4.8	3.2	5.4	3.3	5.5	3.1
	23.0	3.0	2.5	3.6	2.7	4.2	3.1	4.5	3.1	4.8	3.2	5.3	3.2	5.4	3.0
	25.0	3.0	2.5	3.6	2.7	4.2	3.1	4.5	3.1	4.8	3.2	5.2	3.2	5.3	3.0
	27.0	3.0	2.5	3.6	2.7	4.2	3.1	4.5	3.1	4.8	3.2	5.2	3.1	5.3	3.0
	29.0	3.0	2.5	3.6	2.7	4.2	3.1	4.5	3.1	4.8	3.2	5.1	3.1	5.2	3.0
	31.0	3.0	2.5	3.6	2.7	4.2	3.1	4.5	3.1	4.8	3.2	5.1	3.1	5.1	2.9
	33.0	3.0	2.5	3.6	2.7	4.2	3.1	4.5	3.1	4.8	3.2	4.9	3.0	5.0	2.9
	35.0	3.0	2.5	3.6	2.7	4.2	3.1	4.5	3.1	4.7	3.2	4.9	3.1	4.9	2.8
	37.0	3.0	2.5	3.6	2.7	4.2	3.1	4.5	3.2	4.7	3.2	4.9	3.0	4.8	2.8
	39.0	3.0	2.5	3.6	2.7	4.2	3.1	4.5	3.2	4.6	3.1	4.7	3.0	4.8	2.8
50	10.0	3.8	3.0	4.5	3.4	5.2	3.8	5.6	3.9	6.0	4.0	6.7	4.1	7.4	4.1
	12.0	3.8	3.0	4.5	3.4	5.2	3.8	5.6	3.9	6.0	4.0	6.7	4.1	7.3	4.1
	14.0	3.8	3.0	4.5	3.4	5.2	3.8	5.6	3.9	6.0	4.0	6.7	4.1	7.2	4.0
	16.0	3.8	3.0	4.5	3.4	5.2	3.8	5.6	3.9	6.0	4.0	6.7	4.1	7.1	4.0
	18.0	3.8	3.0	4.5	3.4	5.2	3.8	5.6	3.9	6.0	4.0	6.7	4.1	7.0	3.9
	20.0	3.8	3.0	4.5	3.4	5.2	3.8	5.6	3.9	6.0	4.0	6.7	4.1	6.9	3.9
	21.0	3.8	3.0	4.5	3.4	5.2	3.8	5.6	3.9	6.0	4.0	6.7	4.1	6.8	3.8
	23.0	3.8	3.0	4.5	3.4	5.2	3.8	5.6	3.9	6.0	4.0	6.6	4.0	6.7	3.8
	25.0	3.8	3.0	4.5	3.4	5.2	3.8	5.6	3.9	6.0	4.0	6.5	4.0	6.6	3.7
	27.0	3.8	3.0	4.5	3.4	5.2	3.8	5.6	3.9	6.0	4.0	6.4	3.9	6.6	3.7
	29.0	3.8	3.0	4.5	3.4	5.2	3.8	5.6	3.9	6.0	4.0	6.3	3.9	6.5	3.7
	31.0	3.8	3.0	4.5	3.4	5.2	3.8	5.6	3.9	6.0	4.0	6.2	3.8	6.4	3.7
	33.0	3.8	3.0	4.5	3.4	5.2	3.8	5.6	3.9	6.0	4.0	6.1	3.8	6.3	3.6
	35.0	3.8	3.0	4.5	3.4	5.2	3.8	5.6	3.9	5.9	4.0	6.0	3.8	6.2	3.6
	37.0	3.8	3.0	4.5	3.4	5.2	3.8	5.6	3.9	5.8	3.9	5.9	3.7	6.1	3.6
	39.0	3.8	3.0	4.5	3.4	5.2	3.8	5.6	3.9	5.7	3.9	5.8	3.7	6.0	3.5
63	10.0	4.8	3.7	5.7	4.2	6.6	4.8	7.1	4.9	7.6	5.0	8.5	5.1	9.3	5.0
	12.0	4.8	3.7	5.7	4.2	6.6	4.8	7.1	4.9	7.6	5.0	8.5	5.1	9.2	5.0
	14.0	4.8	3.7	5.7	4.2	6.6	4.8	7.1	4.9	7.6	5.0	8.5	5.1	9.1	4.9
	16.0	4.8	3.7	5.7	4.2	6.6	4.8	7.1	4.9	7.6	5.0	8.5	5.1	9.0	4.8
	18.0	4.8	3.7	5.7	4.2	6.6	4.8	7.1	4.9	7.6	5.0	8.5	5.1	8.8	4.8
	20.0	4.8	3.7	5.7	4.2	6.6	4.8	7.1	4.9	7.6	5.0	8.5	5.1	8.7	4.7
	21.0	4.8	3.7	5.7	4.2	6.6	4.8	7.1	4.9	7.6	5.0	8.5	5.1	8.7	4.7
	23.0	4.8	3.7	5.7	4.2	6.6	4.8	7.1	4.9	7.6	5.0	8.4	5.0	8.5	4.6
	25.0	4.8	3.7	5.7	4.2	6.6	4.8	7.1	4.9	7.6	5.0	8.3	5.0	8.4	4.5
	27.0	4.8	3.7	5.7	4.2	6.6	4.8	7.1	4.9	7.6	5.0	8.1	4.9	8.3	4.5
	29.0	4.8	3.7	5.7	4.2	6.6	4.8	7.1	4.9	7.6	5.0	8.0	4.8	8.2	4.5
	31.0	4.8	3.7	5.7	4.2	6.6	4.8	7.1	4.9	7.6	5.0	7.9	4.7	8.1	4.4
	33.0	4.8	3.7	5.7	4.2	6.6	4.8	7.1	4.9	7.6	5.0	7.8	4.7	7.9	4.4
	35.0	4.8	3.7	5.7	4.2	6.6	4.8	7.1	4.9	7.5	4.9	7.7	4.7	7.8	4.3
	37.0	4.8	3.7	5.7	4.2	6.6	4.8	7.1	4.9	7.4	4.9	7.5	4.6	7.7	4.2
	39.0	4.8	3.7	5.7	4.2	6.6	4.8	7.1	4.9	7.2	4.8	7.4	4.6	7.6	4.2

TC Total capacity ; kW
SHC Sensible heat capacity ; kW

Refer to Outdoor Unit Capacity Tables : on page 339~, for the actual performance data of each indoor and outdoor unit combination.

7.2 Heating Capacity

FXLQ-MA / FXNQ-MA [50/60Hz]

Heating capacity

Unit Size	Outdoor air temp. °CDB	Outdoor air temp. °CWB	Indoor air temp. °CDB 16.0 kW	18.0 kW	20.0 kW	21.0 kW	22.0 kW	24.0 kW
20	-19.8	-20.0	1.5	1.5	1.5	1.5	1.5	1.5
	-18.8	-19.0	1.5	1.5	1.5	1.5	1.5	1.5
	-16.7	-17.0	1.6	1.6	1.6	1.6	1.6	1.6
	-14.7	-15.0	1.7	1.7	1.7	1.7	1.7	1.7
	-12.6	-13.0	1.8	1.8	1.8	1.8	1.8	1.8
	-10.5	-11.0	1.9	1.9	1.9	1.9	1.9	1.9
	-9.5	-10.0	1.9	1.9	1.9	1.9	1.9	1.9
	-8.5	-9.1	2.0	2.0	1.9	1.9	1.9	1.9
	-7.0	-7.6	2.0	2.0	2.0	2.0	2.0	2.0
	-5.0	-5.6	2.1	2.1	2.1	2.1	2.1	2.1
	-3.0	-3.7	2.2	2.2	2.2	2.2	2.2	2.2
	0.0	-0.7	2.3	2.3	2.3	2.3	2.2	2.2
	3.0	2.2	2.5	2.5	2.4	2.4	2.2	2.2
	5.0	4.1	2.5	2.5	2.5	2.4	2.3	2.2
	7.0	6.0	2.6	2.6	2.5	2.5	2.3	2.2
	9.0	7.9	2.7	2.7	2.5	2.5	2.3	2.2
	11.0	9.8	2.8	2.7	2.5	2.4	2.3	2.2
	13.0	11.8	2.8	2.7	2.5	2.4	2.3	2.2
	15.0	13.7	2.8	2.7	2.5	2.4	2.3	2.2
25	-19.8	-20.0	1.9	1.9	1.9	1.9	1.9	1.9
	-18.8	-19.0	1.9	1.9	1.9	1.9	1.9	1.9
	-16.7	-17.0	2.1	2.1	2.0	2.0	2.0	2.0
	-14.7	-15.0	2.2	2.2	2.2	2.2	2.2	2.1
	-12.6	-13.0	2.3	2.4	2.3	2.3	2.3	2.3
	-10.5	-11.0	2.4	2.4	2.4	2.4	2.4	2.4
	-9.5	-10.0	2.5	2.5	2.4	2.4	2.4	2.4
	-8.5	-9.1	2.5	2.5	2.5	2.5	2.5	2.5
	-7.0	-7.6	2.6	2.6	2.6	2.6	2.6	2.6
	-5.0	-5.6	2.7	2.7	2.7	2.7	2.7	2.7
	-3.0	-3.7	2.8	2.8	2.8	2.8	2.8	2.8
	0.0	-0.7	3.0	3.0	3.0	3.0	3.0	2.8
	3.0	2.2	3.1	3.1	3.2	3.1	3.0	2.8
	5.0	4.1	3.3	3.2	3.2	3.1	3.0	2.8
	7.0	6.0	3.4	3.4	3.2	3.1	3.0	2.8
	9.0	7.9	3.5	3.4	3.2	3.1	3.0	2.8
	11.0	9.8	3.6	3.4	3.2	3.1	3.0	2.8
	13.0	11.8	3.6	3.4	3.2	3.1	3.0	2.8
	15.0	13.7	3.6	3.4	3.2	3.1	3.0	2.8
32	-19.8	-20.0	2.4	2.4	2.3	2.3	2.3	2.3
	-18.8	-19.0	2.4	2.4	2.4	2.4	2.4	2.4
	-16.7	-17.0	2.6	2.6	2.6	2.6	2.6	2.5
	-14.7	-15.0	2.7	2.7	2.7	2.7	2.7	2.7
	-12.6	-13.0	2.9	2.8	2.8	2.8	2.8	2.8
	-10.5	-11.0	3.0	3.0	3.0	3.0	3.0	3.0
	-9.5	-10.0	3.1	3.1	3.1	3.1	3.0	3.0
	-8.5	-9.1	3.1	3.1	3.1	3.1	3.1	3.1
	-7.0	-7.6	3.2	3.2	3.2	3.2	3.2	3.2
	-5.0	-5.6	3.4	3.4	3.4	3.4	3.4	3.4
	-3.0	-3.7	3.5	3.5	3.5	3.5	3.5	3.5
	0.0	-0.7	3.7	3.7	3.7	3.7	3.7	3.5
	3.0	2.2	3.9	3.9	4.0	3.9	3.7	3.5
	5.0	4.1	4.2	4.1	4.0	3.9	3.7	3.5
	7.0	6.0	4.2	4.2	4.0	3.9	3.7	3.5
	9.0	7.9	4.3	4.3	4.0	3.9	3.7	3.5
	11.0	9.8	4.5	4.3	4.0	3.9	3.7	3.5
	13.0	11.8	4.5	4.3	4.0	3.9	3.7	3.5
	15.0	13.7	4.5	4.3	4.0	3.9	3.7	3.5

Heating capacity

Unit Size	Outdoor air temp. °CDB	Outdoor air temp. °CWB	Indoor air temp. °CDB 16.0 kW	18.0 kW	20.0 kW	21.0 kW	22.0 kW	24.0 kW
40	-19.8	-20.0	3.0	2.9	2.9	2.9	2.9	2.9
	-18.8	-19.0	3.0	3.0	3.0	3.0	3.0	3.0
	-16.7	-17.0	3.2	3.2	3.2	3.2	3.2	3.2
	-14.7	-15.0	3.4	3.4	3.4	3.4	3.4	3.4
	-12.6	-13.0	3.6	3.6	3.6	3.5	3.5	3.5
	-10.5	-11.0	3.7	3.7	3.7	3.7	3.7	3.7
	-9.5	-10.0	3.8	3.8	3.8	3.8	3.8	3.8
	-8.5	-9.1	3.9	3.9	3.9	3.8	3.9	3.9
	-7.0	-7.6	4.0	4.0	4.0	4.0	4.0	4.0
	-5.0	-5.6	4.2	4.2	4.2	4.2	4.2	4.2
	-3.0	-3.7	4.4	4.4	4.4	4.4	4.4	4.4
	0.0	-0.7	4.7	4.6	4.6	4.6	4.6	4.4
	3.0	2.2	4.9	4.9	4.8	4.8	4.7	4.4
	5.0	4.1	5.1	5.1	5.0	4.8	4.7	4.4
	7.0	6.0	5.2	5.2	5.0	4.8	4.7	4.4
	9.0	7.9	5.4	5.3	5.0	4.8	4.7	4.4
	11.0	9.8	5.6	5.3	5.0	4.8	4.7	4.4
	13.0	11.8	5.6	5.3	5.0	4.8	4.7	4.4
	15.0	13.7	5.6	5.3	5.0	4.8	4.7	4.4
50	-19.8	-20.0	3.7	3.7	3.7	3.7	3.7	3.7
	-18.8	-19.0	3.8	3.8	3.8	3.8	3.8	3.8
	-16.7	-17.0	4.1	4.0	4.0	4.0	4.0	4.0
	-14.7	-15.0	4.3	4.3	4.3	4.2	4.2	4.2
	-12.6	-13.0	4.5	4.5	4.5	4.5	4.5	4.5
	-10.5	-11.0	4.7	4.7	4.7	4.7	4.7	4.7
	-9.5	-10.0	4.8	4.8	4.8	4.8	4.8	4.8
	-8.5	-9.1	4.9	4.9	4.9	4.9	4.9	4.9
	-7.0	-7.6	5.1	5.1	5.1	5.1	5.1	5.1
	-5.0	-5.6	5.3	5.3	5.3	5.3	5.3	5.3
	-3.0	-3.7	5.5	5.5	5.5	5.5	5.5	5.5
	0.0	-0.7	5.9	5.9	5.8	5.8	5.8	5.5
	3.0	2.2	6.2	6.2	6.2	6.1	5.9	5.5
	5.0	4.1	6.4	6.4	6.3	6.1	5.9	5.5
	7.0	6.0	6.6	6.6	6.3	6.1	5.9	5.5
	9.0	7.9	6.8	6.7	6.3	6.1	5.9	5.5
	11.0	9.8	7.0	6.7	6.3	6.1	5.9	5.5
	13.0	11.8	7.1	6.7	6.3	6.1	5.9	5.5
	15.0	13.7	7.1	6.7	6.3	6.1	5.9	5.5
63	-19.8	-20.0	4.7	4.7	4.7	4.7	4.7	4.7
	-18.8	-19.0	4.9	4.9	4.8	4.8	4.8	4.8
	-16.7	-17.0	5.1	5.1	5.1	5.1	5.1	5.1
	-14.7	-15.0	5.4	5.4	5.4	5.4	5.4	5.4
	-12.6	-13.0	5.7	5.7	5.7	5.7	5.7	5.7
	-10.5	-11.0	6.0	6.0	6.0	6.0	6.0	5.9
	-9.5	-10.0	6.1	6.1	6.1	6.1	6.1	6.1
	-8.5	-9.1	6.3	6.3	6.2	6.2	6.2	6.2
	-7.0	-7.6	6.5	6.5	6.4	6.4	6.4	6.4
	-5.0	-5.6	6.8	6.7	6.7	6.7	6.7	6.7
	-3.0	-3.7	7.0	7.0	7.0	7.0	7.0	7.0
	0.0	-0.7	7.5	7.4	7.4	7.4	7.4	7.0
	3.0	2.2	7.9	7.8	7.8	7.7	7.5	7.0
	5.0	4.1	8.1	8.1	8.0	7.7	7.5	7.0
	7.0	6.0	8.4	8.4	8.0	7.7	7.5	7.0
	9.0	7.9	8.7	8.5	8.0	7.7	7.5	7.0
	11.0	9.8	8.9	8.5	8.0	7.7	7.5	7.0
	13.0	11.8	9.0	8.5	8.0	7.7	7.5	7.0
	15.0	13.7	9.0	8.5	8.0	7.7	7.5	7.0

Refer to Outdoor Unit Capacity Tables : on page 342~, for the actual performance data of each indoor and outdoor unit combination.

10

8. Sound Levels

Overall

■ **Floor Standing Type**

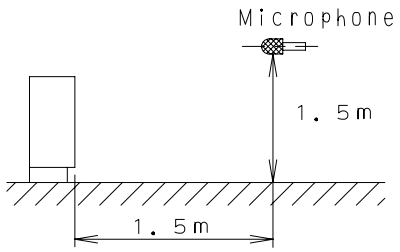

4D034528

■ **Concealed Floor Standing Type**

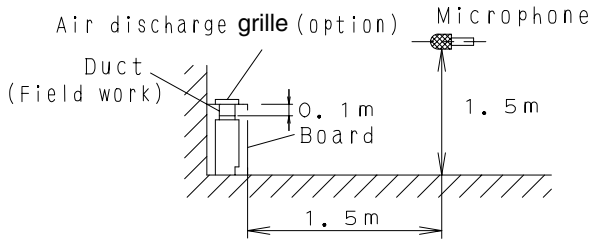

4D034534

dBA

Model	220V, 50/60Hz		240V, 50Hz		Model	220V, 50/60Hz		240V, 50Hz	
	H	L	H	L		H	L	H	L
FXLQ20MA FXLQ25MA FXLQ32MA	35	32	37	34	FXNQ20MA FXNQ25MA FXNQ32MA	35	32	37	34
FXLQ40MA	38	33	40	35	FXNQ40MA	38	33	40	35
FXLQ50MA	39	34	41	36	FXNQ50MA	39	34	41	36
FXLQ63MA	40	35	42	37	FXNQ63MA	40	35	42	37

Note:

1. The operating conditions are assumed to be standard (JIS conditions).
2. These operating values were obtained in a dead room (conversion values).
   Sound level will vary depending on a range of factors such as the construction (acoustic absorption coefficient) of the particular room in which the equipments installed.

Octave Band Level

○———○ 220V
○– – –○ 240V

FXLQ20 · 25MAVE

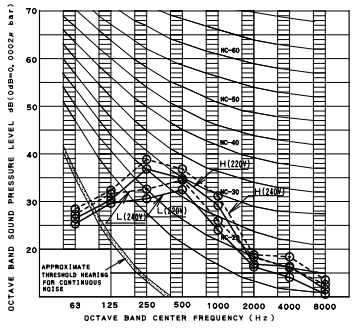

4D034528A

FXLQ32MAVE

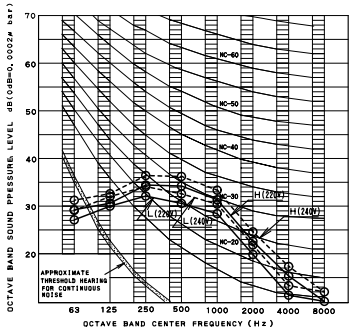

4D034564A

FXLQ40MAVE

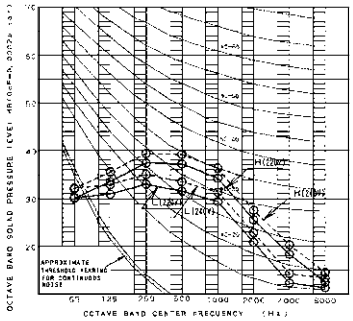

4D034565A

FXLQ50MAVE

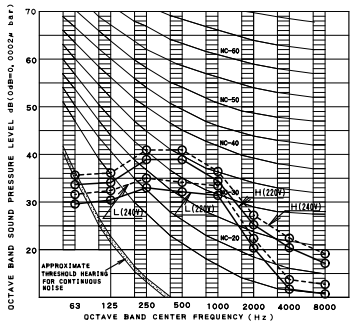

4D034566A

FXLQ63MAVE

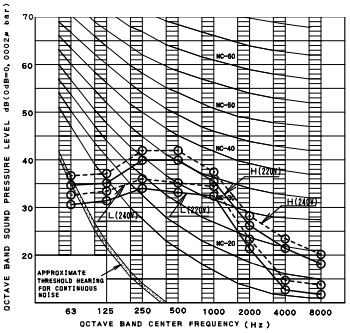

4D034567A

FXNQ20 · 25MAVE

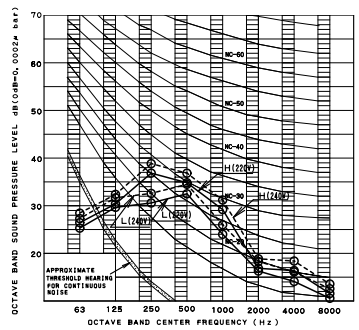

4D034534A

FXNQ32MAVE

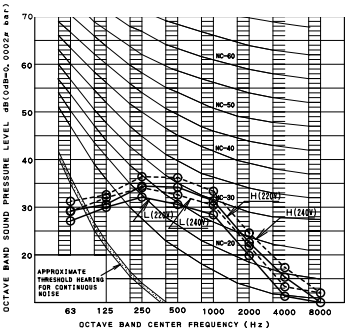

4D034535A

FXNQ40MAVE

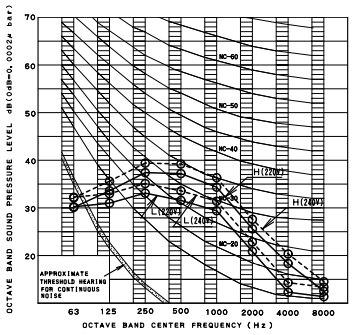

4D034536A

FXNQ50MAVE

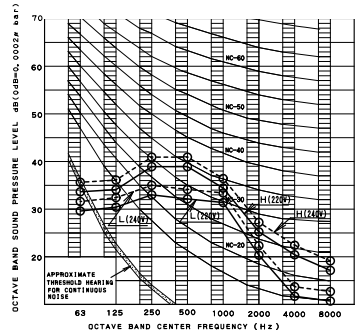

4D034537A

FXNQ63MAVE

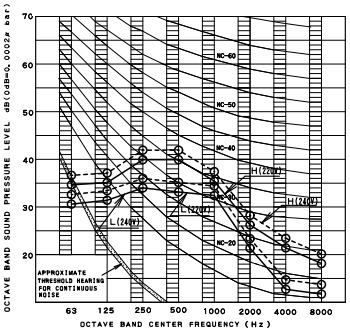

4D034538A

10

9. Installation

Installation Example

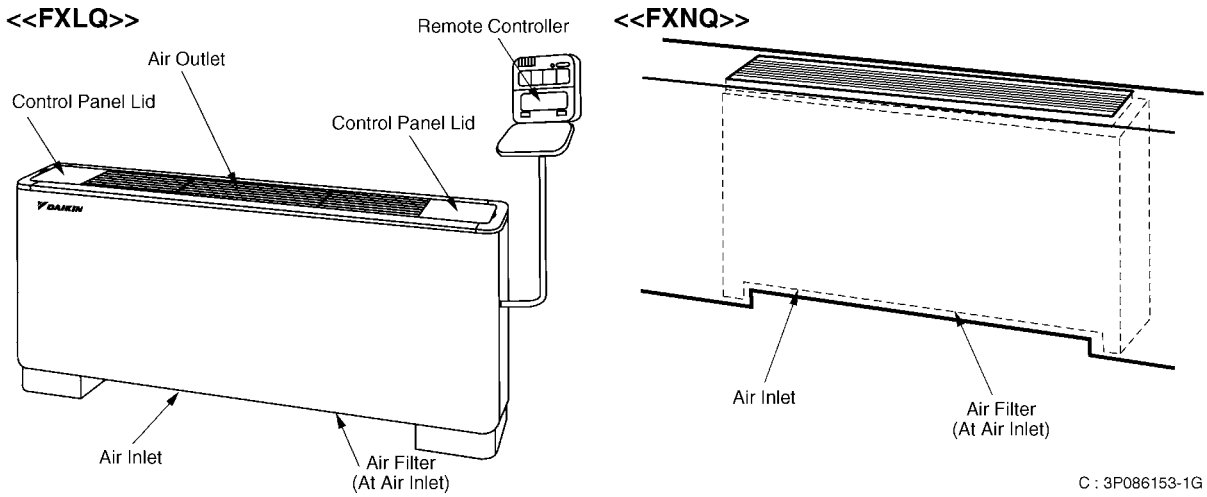

Service Space

(1) Select an installation site where the following conditions are satisfied and that meets with your customer's approval.

- Where the floor is strong enough to dear the indoor unit weight.
- Where the floor is not significantly inclined.
- Where nothing blocks the air passage.
- Where condensate can be properly drained.
- Where sufficient clearance for installation and maintenance can be ensured.
- Where optimum air distribution can be ensured.
- Where there is no risk of flammable gas leakage.
- Where piping between indoor and outdoor units is possible within the allowable limit. (Refer to the installation manual of the outdoor unit.)

⚠ CAUTION

- Install the indoor and outdoor units, power supply wiring and connecting wires at least 1 meter away from televisions or radios in order to prevent image interference or noise.
  (Depending on the radio waves, a distance of 1 meter may not be sufficient enough to eliminate the noise.)

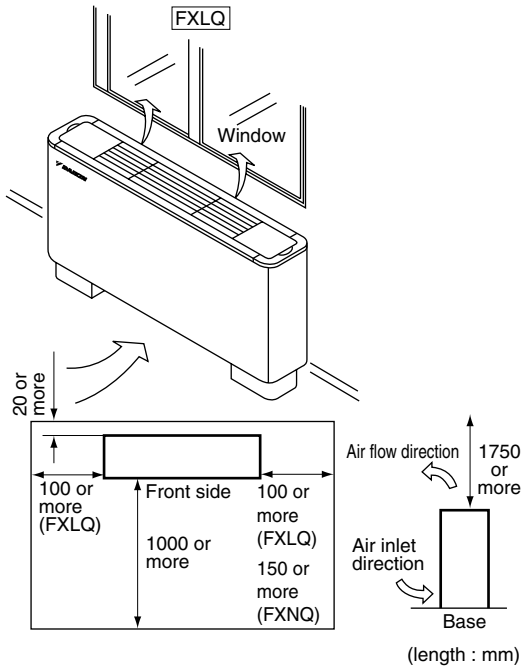

(length : mm)

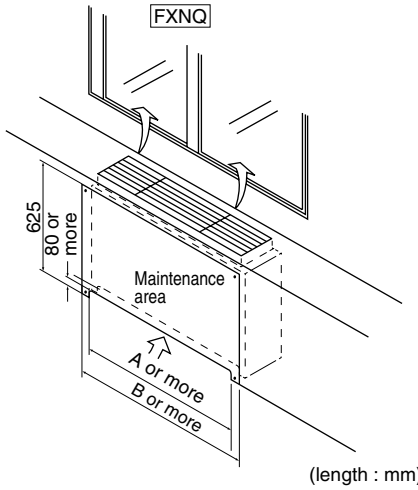

(length : mm)

(IMPORTANT) Leave sufficient clearance for air inlet and maintenance.

Model		A (mm)	B (mm)
FXLQ20 · 25MAVE	FXNQ20 · 25MAVE	570	1030
FXLQ32 · 40MAVE	FXNQ32 · 40MAVE	710	1170
FXLQ50 · 63MAVE	FXNQ50 · 63MAVE	990	1450

C : 3P086154-2K

Center of Gravity

FXLQ

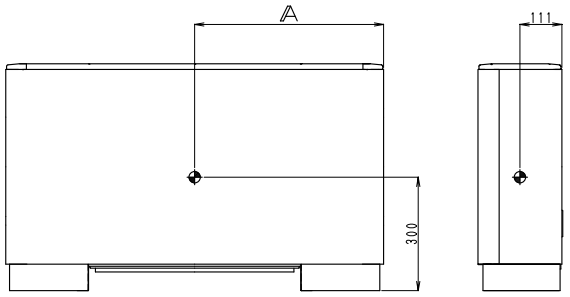

Unit (mm)

	A
FXLQ20•25MAVE	500
FXLQ32•40MAVE	570
FXLQ50•63MAVE	710

C : 4D034527B

FXNQ

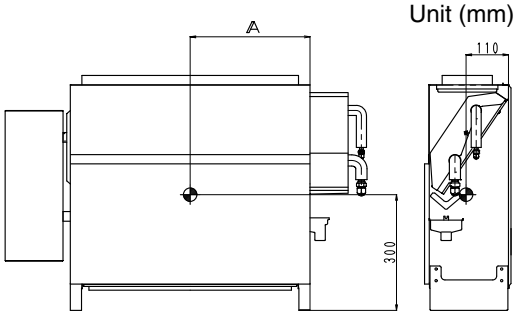

Unit (mm)

	A
FXNQ20•25MAVE	395
FXNQ32•40MAVE	465
FXNQ50•63MAVE	505

C : 4D034533A

Bolt Pitch

(1) Positioning of holes for fastening to the wall

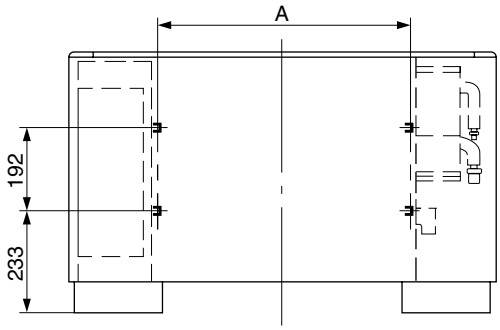

Model	A (mm)
FXNQ20 · 25MAVE	590
FXNQ32 · 40MAVE	730
FXNQ50 · 63MAVE	1010

(2) How to open / close the front panel

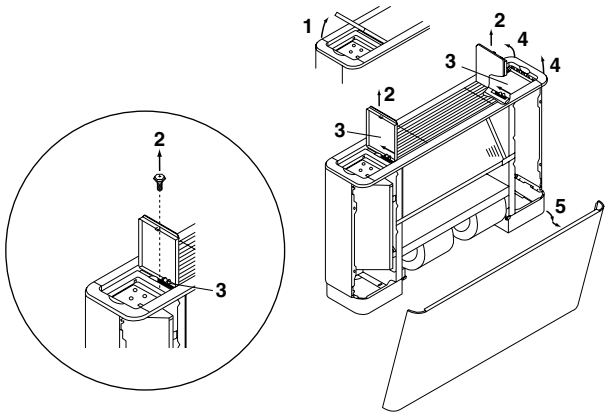

1. Open the lid of controll panel (both left and right)
2. Remove screws (both left and right) that lock the knobs in position.
3. Push the knobs (both left and right) to the rear.
4. Lift the front of the top plate.
5. Lower the front panel towards the front of the unit.

- To close, perform the procedure in opposite order. Pull towards the front unit the knob snaps in place.

C : 3P086154-2K

10

Drain Piping Work

〈〈**Rig the drain pipe as shown below and take measures against condensation. Improperly rigged piping could lead to leaks and eventually wet furniture and belongings.**〉〉

(1) Carry out the drain piping.

Connect the drain hose (1) using the attached hose and parts, as shown in the right drawing.

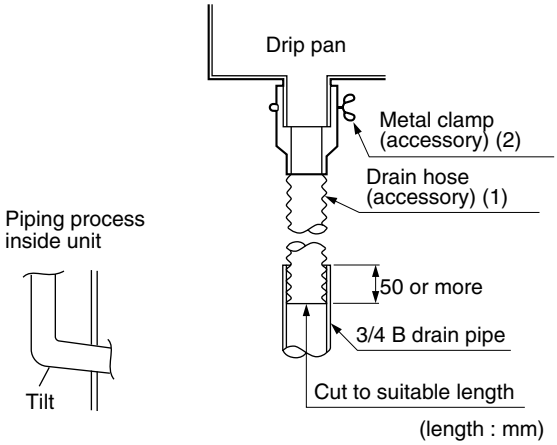

- If converging multiple drain pipes, install according to the procedure shown below.

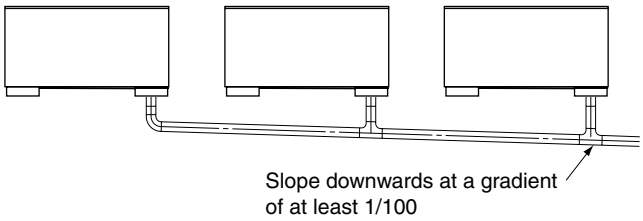

Select converging drain pipes whose gauge is suitable for the operating capacity of the unit.

(2) After piping work is finished, check drainage flows smoothly.
- Add approximately 1 liter of water slowly from the air outlet and check drainage flow.

(3) Be sure to insulate all indoor pipes.

⚠ CAUTION

- Drain piping connections
  Do not connect the drain piping directly to sewage pipes that smell of ammonia. The ammonia in the sewage might enter the indoor unit through the drain pipes and corrode the heat exchanger.
- Keep in mind that it will become the cause of getting drain pipe blocked if water collects on drain pipe.

C : 3P086154-2K

10. Accessories

Standard Accessories

FXLQ20~63MA
FXNQ20~63MA

Name	Drain hose	Insulation for fitting	Sealing pad	Clamp	Leveling	
Quantity	1 set	1 each.	1 pc.	8 pcs.	4 pcs.	
Shape	Hose × 1 Metal clamp × 1 (1) (2) 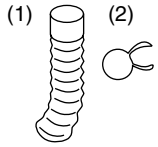	(3)For gas pipe 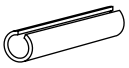 (4)For liquid pipe 	(5) 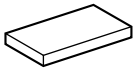	(6) 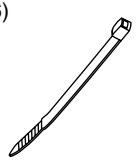	(7) 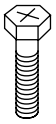	[Other] • Operation manual • Installation manual

C : 3P086154-2K

Optional Accessories (For Unit)

No.	Type / Item	FXLQ20MA FXNQ20MA	FXLQ25MA FXNQ25MA	FXLQ32MA FXNQ32MA	FXLQ40MA FXNQ40MA	FXLQ50MA FXNQ50MA	FXLQ63MA FXNQ63MA
1	Long life replacement filter	KAFJ361K28		KAFJ361K45		KAFJ361K71	

C : 4D034574B

Optional Accessories (For Controls) : Refer to P.375

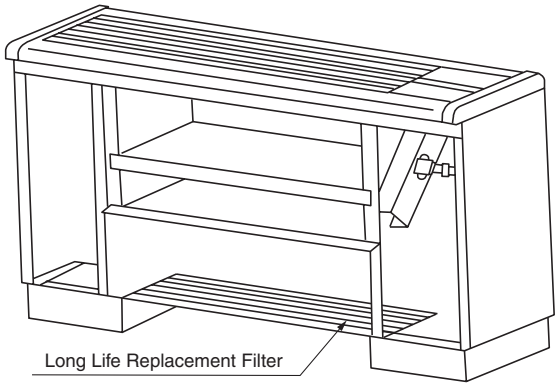

(V0683)

10

FXUQ-MA
Ceiling Suspended Cassette Type (Connection Unit Series)

1. Features 288
2. Specifications 289
3. Dimensions 291
4. Piping Diagrams 294
5. Wiring Diagrams 295
6. Electric Characteristics 297
7. Capacity Tables 298
   7.1 Cooling Capacity 298
   7.2 Heating Capacity 299
8. Air Velocity and Temperature Distributions (Reference Data) 300
9. Sound Levels 303
10. Installation 304
   10.1 Indoor Units 304
   10.2 Connecting Units 309
11. Accessories 319

11

1. Features

Flexibility in installation location

Because the installation location, air flow direction and air flow rate can be selected according to the shape, lighting, and interior design of a room, the Ceiling Suspended Cassette Type air conditioner will create a comfortable environment throughout the room. This is a completely new air conditioning system that produces the comfort level of a four-way air flow, ceiling-mounted cassette type air conditioner with the ease of a ceiling-suspended unit.



Development back ground of FXUQ-MA

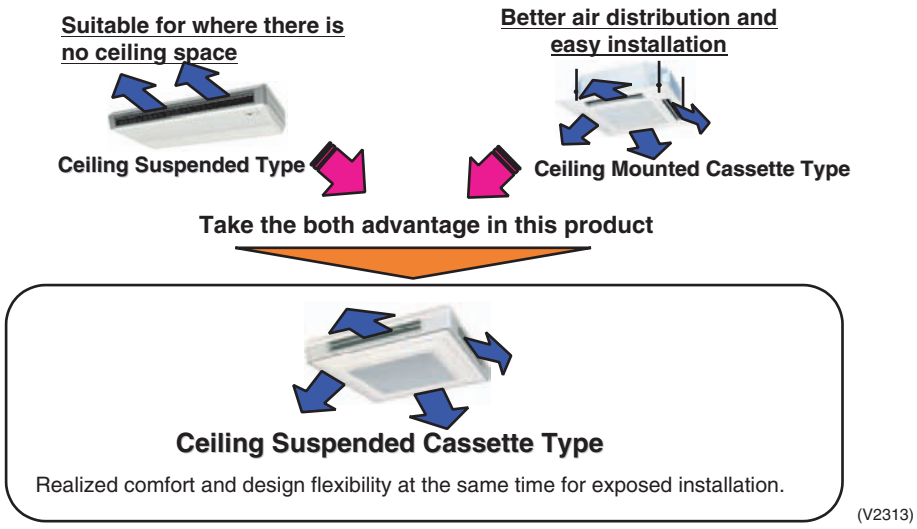

Flexible Design

- •Daikin unique cassette
- •Low Silhouette design:
  71 Type - 165mm thickness
  (Current Multi Flow Cassette:338mm)
- •Aesthetically pleasing design
- •High ceiling up 3.5m
- •Flexible air distribution by control of direction and volume

Easy Installation

- •Flexible piping installation (3 directions)
- •Ceiling space not required

Easy Maintenance

- •Long life filter (standard accessories)
- •Drain pump(standard accessories)

<Variable discharge direction and air volume>

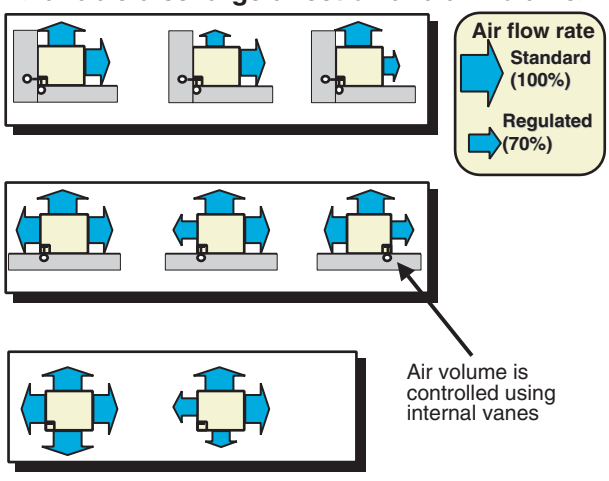

2. Specifications

Ceiling Suspended Cassette Type

Model	Indoor Unit		FXUQ71MAV1	FXUQ100MAV1	FXUQ125MAV1
	Connection Unit		BEVQ71MAVE	BEVQ100MAVE	BEVQ125MAVE
★1 Cooling Capacity (19.5°CWB)		kcal/h	7,100	10,000	12,500
		Btu/h	28,300	39,600	49,500
		kW	8.3	11.6	14.5
★2 Cooling Capacity (19.0°CWB)		kW	8.0	11.2	14.0
★3 Heating Capacity (Max.)		kcal/h	7,700	10,800	12,000
		Btu/h	30,700	42,700	47,700
		kW	9.0	12.5	14.0
Casing Color			White (10Y9/0.5)	White (10Y9/0.5)	White (10Y9/0.5)
Dimensions: (H×W×D)		mm	165×895×895	230×895×895	230×895×895
Coil (Cross Fin Coil)	Rows×Stages×Fin Pitch	mm	3×6×1.5	3×8×1.5	3×8×1.5
	Face Area	m²	0.265	0.353	0.353
Fan	Model		QTS48A10M	QTS50B15M	QTS50B15M
	Type		Turbo Fan	Turbo Fan	Turbo Fan
	Motor Output × Number of Units	W	45×1	90×1	90×1
	Air Flow Rate (H/L)	m³/min	19/14	29/21	32/23
		cfm	671/494	1,024/741	1,130/812
	Drive		Direct Drive	Direct Drive	Direct Drive
Temperature Control			Microprocessor Thermostat for Cooling and Heating	Microprocessor Thermostat for Cooling and Heating	Microprocessor Thermostat for Cooling and Heating
Sound Absorbing Thermal Insulation Material			Heat Resistant Foamed Polyethylene, Regular Foamed Polyethylene	Heat Resistant Foamed Polyethylene, Regular Foamed Polyethylene	Heat Resistant Foamed Polyethylene, Regular Foamed Polyethylene
Piping Connections	Liquid Pipes	mm	ϕ9.5 (Flare Connection)	ϕ9.5 (Flare Connection)	ϕ9.5 (Flare Connection)
	Gas Pipes	mm	ϕ15.9 (Flare Connection)	ϕ15.9 (Flare Connection)	ϕ15.9 (Flare Connection)
	Drain Pipe	mm	VP20 (External Dia. 26 Internal Dia. 20)	VP20 (External Dia. 26 Internal Dia. 20)	VP20 (External Dia. 26 Internal Dia. 20)
Machine Weight		kg	25	31	31
★5 Sound Level (H/L) (230V)		dBA	40/35	43/38	44/39
Safety Devices			Thermal Protector for Fan Motor	Thermal Protector for Fan Motor	Thermal Protector for Fan Motor
Standard Accessories			Operation Manual, Installation Manual, Drain Hose, Clamp Metal, Insulation for Fitting, Sealing Pads, Clamps, Screws, Washers, Holding Plate.	Operation Manual, Installation Manual, Drain Hose, Clamp Metal, Insulation for Fitting, Sealing Pads, Clamps, Screws, Washers, Holding Plate.	Operation Manual, Installation Manual, Drain Hose, Clamp Metal, Insulation for Fitting, Sealing Pads, Clamps, Screws, Washers, Holding Plate.
Drawing No.			C : 4D045395A		

Notes:

★1 Indoor temp. : 27°CDB, 19.5°CWB / outdoor temp.: 35°CDB / Equivalent piping length: 7.5m, level difference: 0m.
★2 Indoor temp. : 27°CDB, 19.0°CWB / outdoor temp.: 35°CDB / Equivalent piping length: 7.5m, level difference: 0m.
★3 Indoor temp. : 20°CDB / outdoor temp.: 7°CDB, 6°CWB / Equivalent piping length; 7.5m, level difference; 0m. (Heat pump only)
4 Capacities are net, including a deduction for cooling (an additional for heating) for indoor fan motor heat.
★5 Anechoic chamber conversion value, measured at a point 1.5m downward from the unit center. These values are normally somewhat higher during actual operation as a result of ambient conditions.
6 Refer to page 297 for Fan Motor Input.

Conversion Formulae
kcal/h=kW×860 Btu/h=kW×3412 cfm=m³/min×35.3

11

BEV Units

Model				BEVQ71MAVE	BEVQ100MAVE	BEVQ125MAVE
Power Supply				1 Phase 50Hz 220~240V	1 Phase 50Hz 220~240V	1 Phase 50Hz 220~240V
Casing				Galvanized Steel Plate	Galvanized Steel Plate	Galvanized Steel Plate
Dimensions: (H×W×D)			mm	100×350×225	100×350×225	100×350×225
Sound Absorbing Thermal Insulation Material				Flame and Heat Resistant Foamed Polyethylene	Flame and Heat Resistant Foamed Polyethylene	Flame and Heat Resistant Foamed Polyethylene
Piping Connection	Indoor Unit	Liquid Pipes		9.5mm (Flare Connection)	9.5mm (Flare Connection)	9.5mm (Flare Connection)
		Gas Pipes		15.9mm (Flare Connection)	15.9mm (Flare Connection)	15.9mm (Flare Connection)
	Outdoor Unit	Liquid Pipes		9.5mm (Flare Connection)	9.5mm (Flare Connection)	9.5mm (Flare Connection)
		Suction Gas Pipes		15.9mm (Flare Connection)	15.9mm (Flare Connection)	15.9mm (Flare Connection)
Machine Weight (Mass)			kg	3.0	3.0	3.5
Standard Accessories				Installation manual, Gas piping connections, Insulation for fitting, Sealing material, Clamps	Installation manual, Gas piping connections, Insulation for fitting, Sealing material, Clamps	Installation manual, Gas piping connections, Insulation for fitting, Sealing material, Clamps
Drawing No.				4D045387A	4D045387A	4D045388A

Connection Example

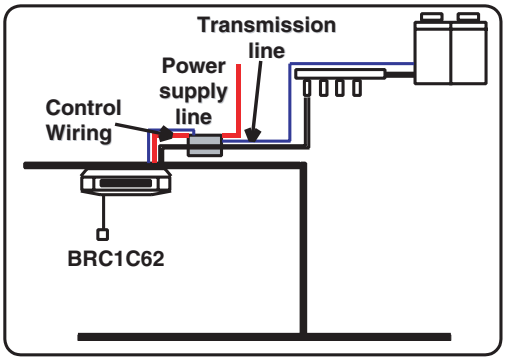

1. Wiring Work
- The connecting line between SkyAir Indoor Unit – BEV Unit : 3 cores…like a Transmission Line
- BEV Unit's power supply line; Single phase 2 line…like a VRV Indoor unit
- BEV Unit – other **VRV** indoor unit or outdoor unit – : 2 cores…DIII network wiring (super wiring)

2. Piping work
SkyAir side,Outdoor Unit Side,They are both flare connection.

Consideration matter

- When connecting centralized-control device, it is necessary to **install an interface adaptor for SkyAir series in an indoor unit.**

- Distance between indoor unit and –BEV unit must be **within 5m**.

(V2315)

Outline figure

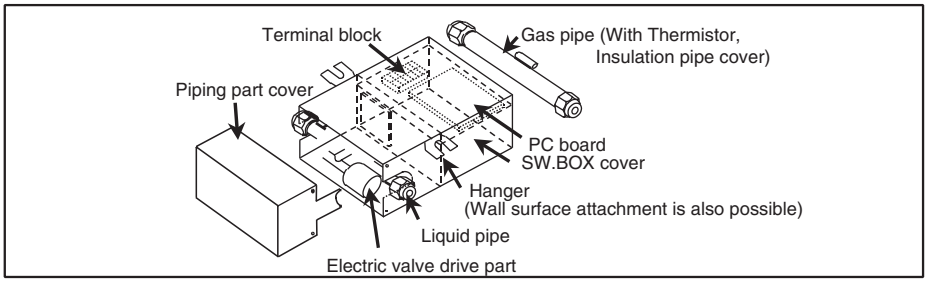

Installation pattern / maintenance

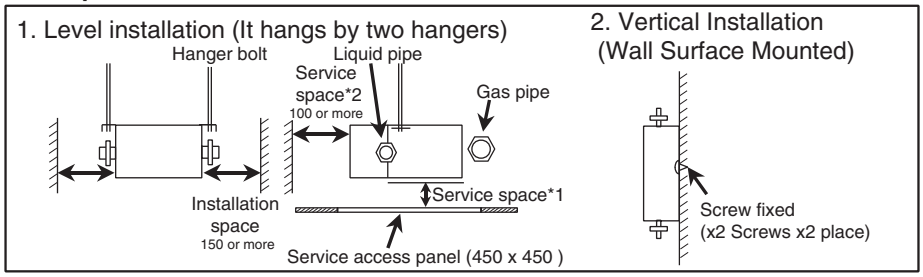

*1; Service space for switch box.
(Service access panel is required for the bottom side. When there is nothing, 350 or more spaces are required.)
*2; For electric valve drive part's maintenance. (a control box is removed)

(V2316)

3. Dimensions

FXUQ71MAV1

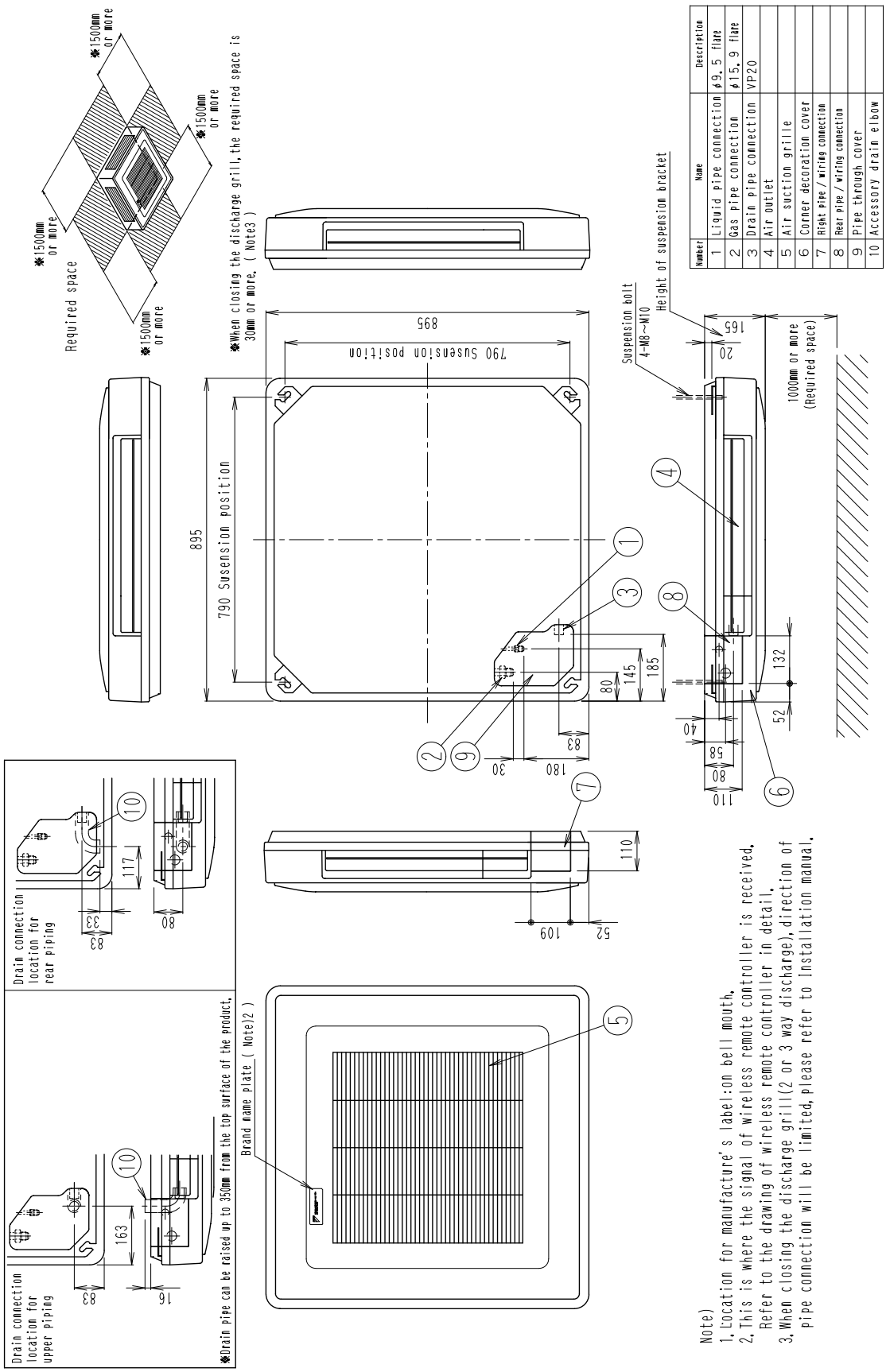

Number	Name	Description
1	Liquid pipe connection	ϕ9.5 flate
2	Gas pipe connection	ϕ15.9 flate
3	Drain pipe connection	VP20
4	Air outlet	
5	Air suction grille	
6	Corner decoration cover	
7	Right pipe / wiring connection	
8	Rear pipe / wiring connection	
9	Pipe through cover	
10	Accessory drain elbow	

11

FXUQ100MAV1
FXUQ125MAV1

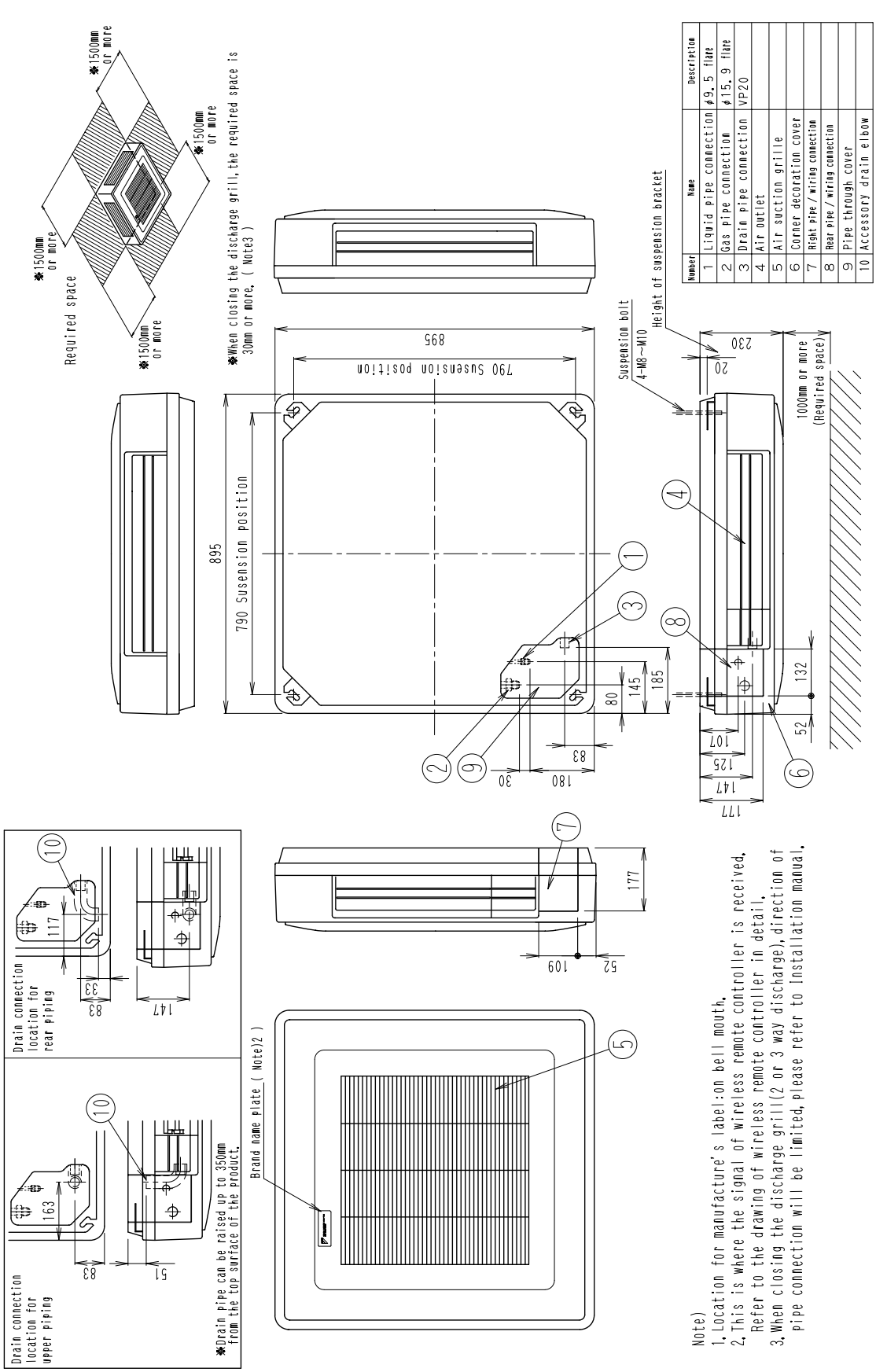

Number	Name	Description
1	Liquid pipe connection	ϕ9.5 flare
2	Gas pipe connection	ϕ15.9 flare
3	Drain pipe connection	VP20
4	Air outlet	
5	Air suction grille	
6	Corner decoration cover	
7	Right pipe / wiring connection	
8	Rear pipe / wiring connection	
9	Pipe through cover	
10	Accessory drain elbow	

BEVQ71MA / 100MA / 125MAVE (When installing the unit on wall)

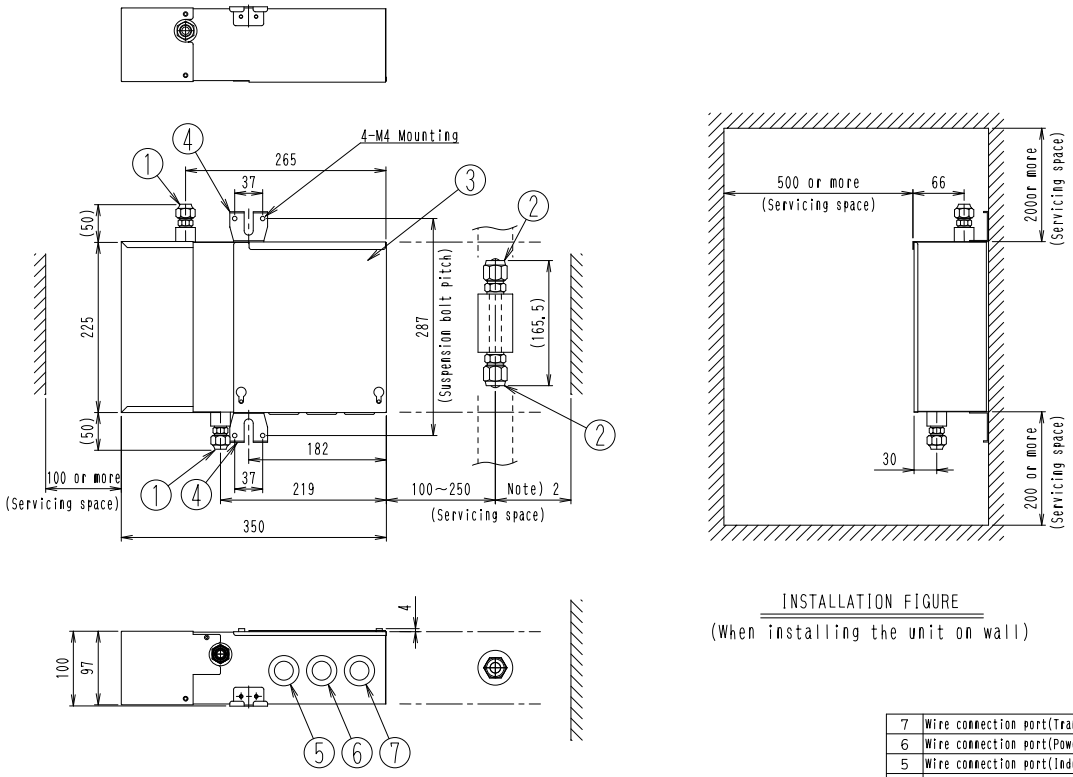

INSTALLATION FIGURE
(When installing the unit on wall)

7	Wire connection port(Transmission(VRV)・Gas pipe thermistor)	
6	Wire connection port(Power supply・Ground)	
5	Wire connection port(Indoor unit connection)	
4	Suspension bolt	
3	Electric parts box	
2	Gas pipe connection port	φ15.9mm flare connection
1	Liquid pipe connection port	φ 9.5mm flare connection
Number	Part name	Description

Notes)1. Be sure to install wire connection port to be sure to become downward.
2. Be sure to secure the space which can be the thinghtening work of the flare nut.

C: 3D045389

11

BEVQ71MA / 100MA / 125MAVE (When hanging the unit from the ceiling)

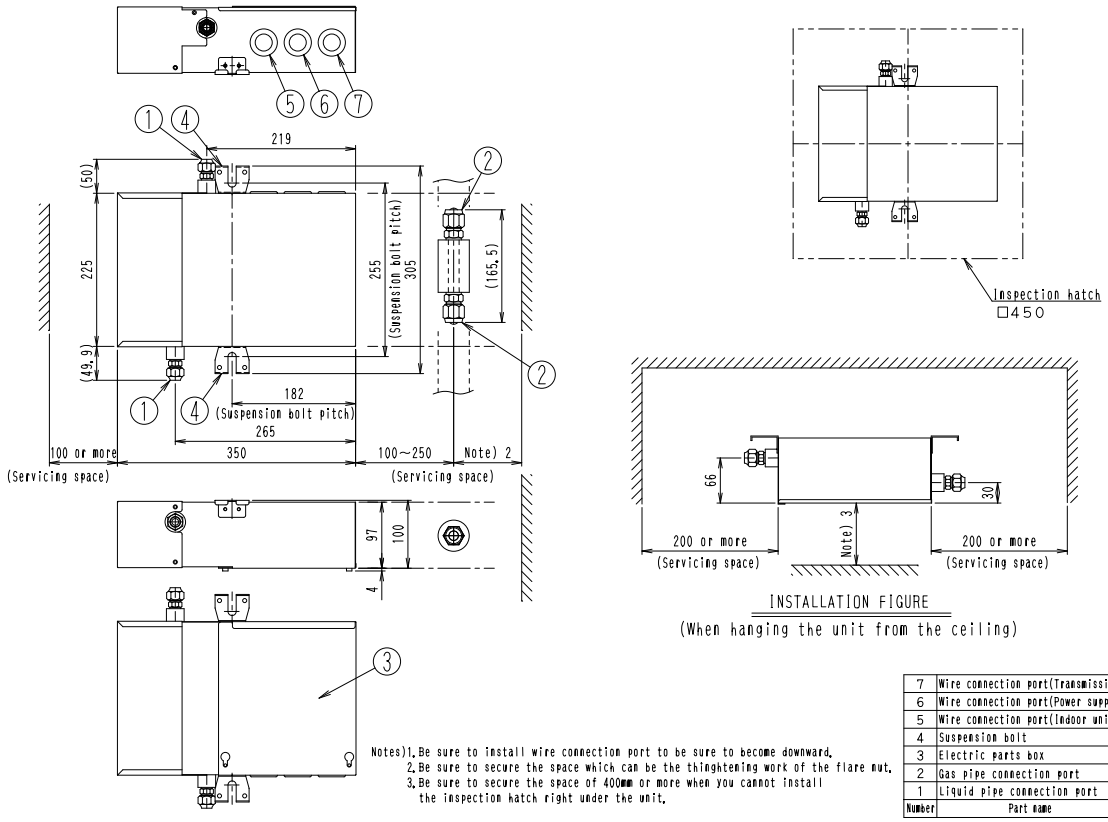

INSTALLATION FIGURE
(When hanging the unit from the ceiling)

7	Wire connection port(Transmission(VRV)・Gas pipe thermistor)	
6	Wire connection port(Power supply・Ground)	
5	Wire connection port(Indoor unit connection)	
4	Suspension bolt	
3	Electric parts box	
2	Gas pipe connection port	φ15.9mm flare connection
1	Liquid pipe connection port	φ 9.5mm flare connection
Number	Part name	Description

Notes)1. Be sure to install wire connection port to be sure to become downward.
2. Be sure to secure the space which can be the thinghtening work of the flare nut.
3. Be sure to secure the space of 400mm or more when you cannot install the inspection hatch right under the unit.

C: 3D045390

4. Piping Diagrams

Indoor unit

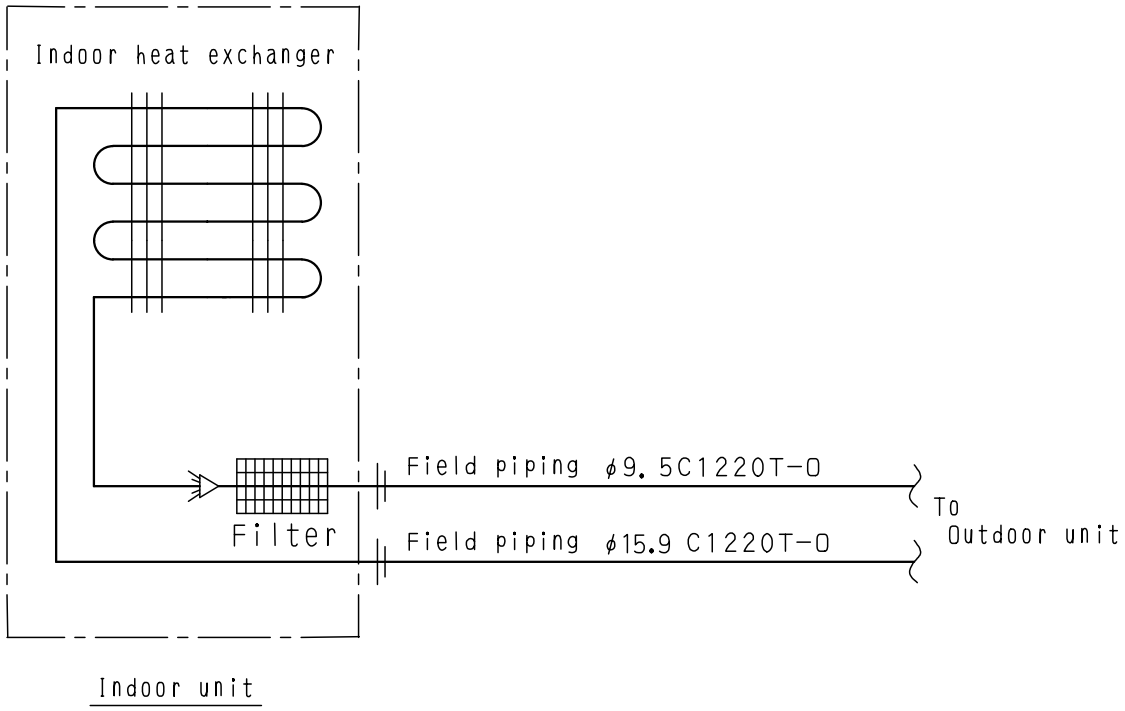

C: 4D037995F

Connection Unit

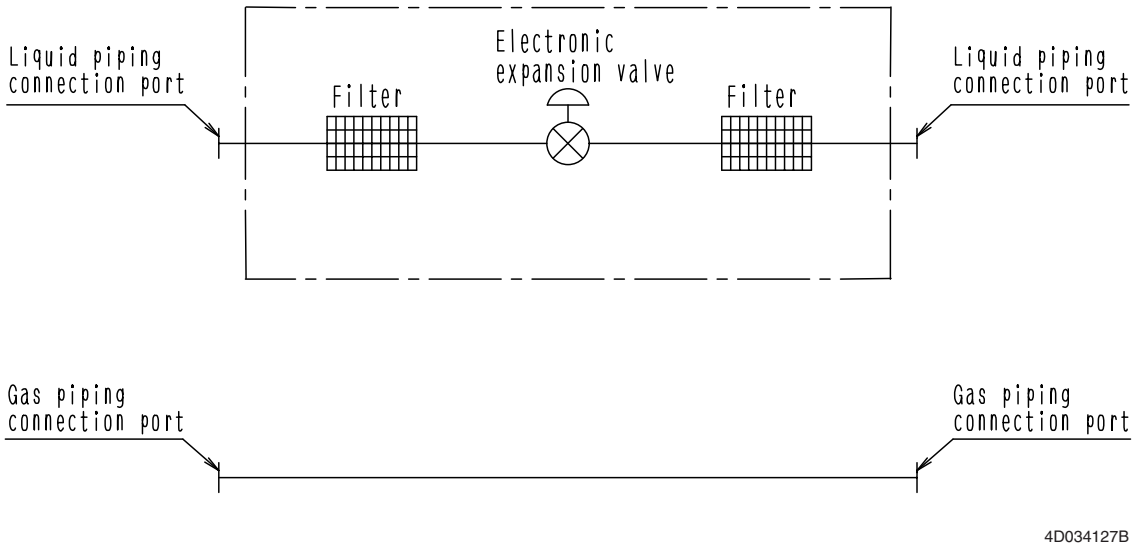

4D034127B

5. Wiring Diagrams

FXUQ71MAV1 / FXUQ100MAV1 / FXUQ125MAV1

3D044973A

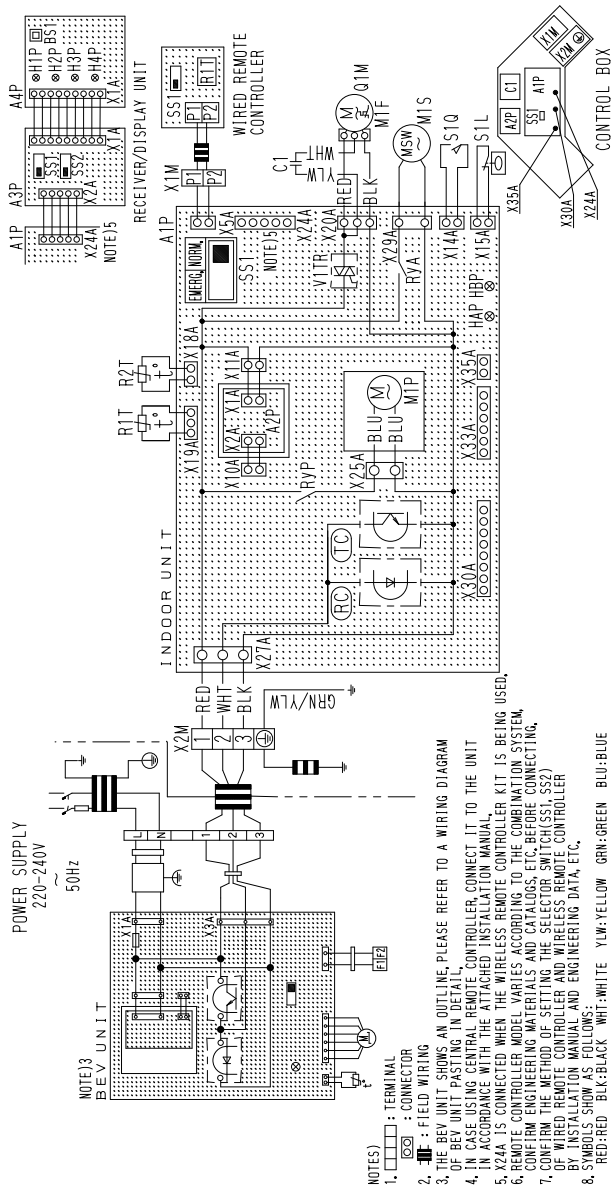

	INDOOR UNIT		WIRED REMOTE CONTROLLER
A1P	PRINTED CIRCUIT BOARD	R1T	THERMISTOR(AIR)
A2P	PRINTED CIRCUIT BOARD (TRANSFORMER 220~240V/16V)	SS1	SELECTOR SWITCH(MAIN/SUB) RECEIVER/DISPLAY UNIT
C1	CAPACITOR(M1F)		(ATTACHED TO WIRLESS REMOTE CONTROLLER)
HAP	LIGHT EMITTING DIODE (SERVICE MONITOR GREEN)	A3P	PRINTED CIRCUIT BOARD
		A4P	PRINTED CIRCUIT BOARD
HBP	LIGHT EMITTING DIODE (SERVICE MONITOR GREEN)	BS1	PUSH BUTTON(ON/OFF)
		H1P	LIGHT EMITTING DIODE (ON-RED)
M1S	MOTOR(SWING FLAP)		
M1F	MOTOR(INDOOR FAN)	H2P	LIGHT EMITTING DIODE (TIMER-GREEN)
M1P	MOTOR(DRAIN PUMP)		
Q1M	THERMO SWITCH(M1F EMBEDDED)	H3P	LIGHT EMITTING DIODE (FILTER SIGN-RED)
R1T	THERMISTOR(AIR)		
R2T	THERMISTOR(COIL)	H4P	LIGHT EMITTING DIODE (DEFROST-ORANGE)
RYA	MAGNETIC RELAY(M1A)		
RYP	MAGNETIC RELAY(M1P)	SS1	SELECTOR SWITCH(MAIN/SUB)
S1Q	LIMIT SWITCH(SWING FLAP)	SS2	SELECTOR SWITCH (WIRELESS ADDRESS SET)
S1L	FLOAT SWITCH		
SS1	SELECTOR SWITCH(EMERGENCY)		CONNECTOR FOR OPTIONAL PARTS
V1TR	PHASE CONTROL CIRCUIT	X24A	CONNECTOR(WIRELESS REMOTE CONTROLLER)
X1M	TERMINAL STRIP	X30A	CONNECTOR(INTERFACE ADAPTOR FOR SKY AIR SERIES)
X2M	TERMINAL STRIP		
(RC)	SIGNAL RECEIVER	X35A	CONNECTOR(GROUP CONTROL ADAPTOR)
(TC)	SIGNAL TRANSMISSION CIRCUIT		

11

BEVQ71MAVE / BEVQ100MAVE / BEVQ125MAVE

BEV UNIT	
A1P	PRINTED CIRCUIT BOARD ASSY
A2P	POWER SUPPLY PRINTED CIRCUIT BOARD ASSY(220-240V/16V)
F1U	FUSE(Ⓑ, 10A, 250V)
HAP	LIGHT EMITTING DIODE (SERVICE MONITOR-GRREN)
R3T	THERMISTOR(GAS)
SS1	SELECTOR SWITCH(M/S)
X1M	TERMINAL STRIP(POWER)
X2M	TERMINAL STRIP(TRANSMISSION)
Y1E	ELECTRONIC EXPANSION VALVE
Z1C・Z2C Z3C・Z4F	NOISE FILTER

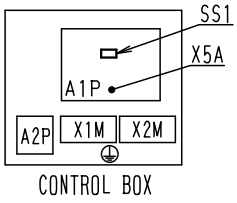

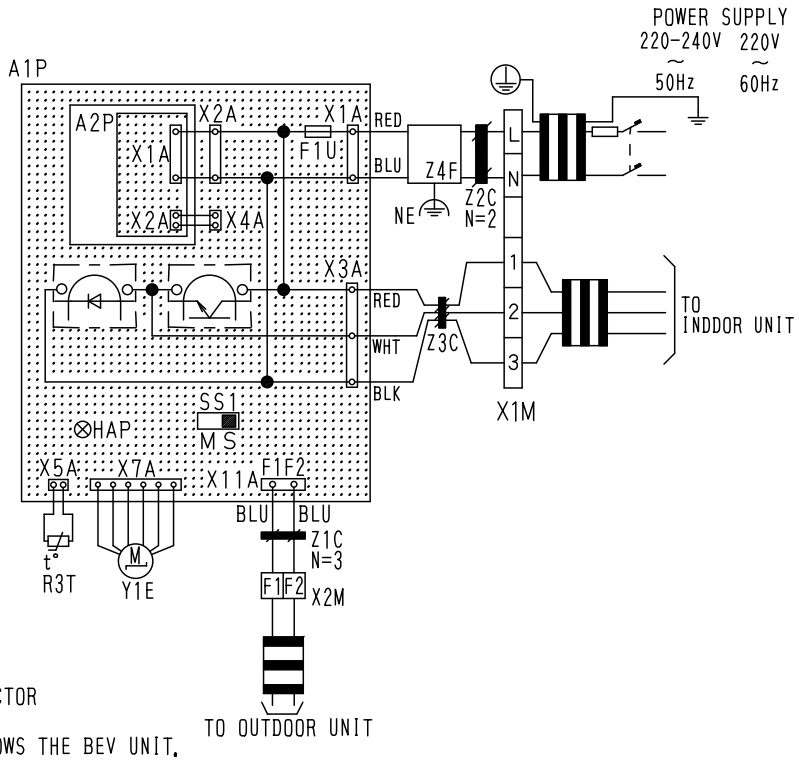

注）1. ▭ : TERMINAL ⊡ :CONNECTOR
2. ═ :FIELD WIRING
3. THIS WIRING DIAGRAM ONLY SHOWS THE BEV UNIT.
   SEE THE WIRING DIAGRAMS AND INSTALLATION MANUALS FOR THE WIRING AND SETTINGS FOR THE INDOOR , OUTDOOR , AND BS UNITS.
4. SEE THE INDOOR UNIT'S WIRING DIAGRAM WHEN INSTALLING OPTIONAL PARTS FOR THE INDOOR UNIT.
5. ONLY ONE INDOOR UNIT MAY BE CONNECTED TO THE BEV UNIT.
   SEE THE INDOOR UNIT'S WIRING DIAGRAM FOR WHEN CONNECTING THE REMOTE CONTROL.
6. ALWAYS USE THE SKY AIR CONNECTION ADAPTER FOR THE INDOOR UNIT WHEN USING A CENTRAL CONTROL UNIT.
   REFER TO THE MANUAL ATTACHED THE UNIT WHEN CONNECTING.
7. COOL/HEAT CHANGEOVER OF INDOOR UNITS CONNECTED TO BEV UNIT CANNOT BE CARRIED OUT UNLESS THEY ARE CONNECTED TO BS UNIT.
   IN CASE OF A SYSTEM WITH BEV UNIT ONLY, COOL/HEAT SELECTOR IS REQUIRED.
8. SET THE SS1 TO " M " ONLY FOR THE BEV UNIT CONNECTED TO THE INDOOR UNIT WHICH IS TO HAVE COOL/HEAT SWITCHING CAPABILITY, WHEN CONNECTING THE BS UNIT.
   THE " M/S " ON THE SS1 STANDS FOR " MAIN/SUB ".
   THIS IS SET TO "S" WHEN SHIPPED FROM THE FACTORY.
9. CONNECT THE ATTACHED THERMISTOR TO THE R3T.
10. SYMBOLS SHOW AS FOLLOWS.
    (BLU:BLUE RED:RED WHT:WHITE BLK:BLACK)

3D044901B

6. Electric Characteristics

Units				Power supply		IFM		Input(W)	
Model	Hz	Volts	Voltage range	MCA	MFA	KW	FLA	Cooling	Heating
BEVQ71M(A)VE + FXUQ71M(A)V1	50	220-240	MAX. 264 Min. 198	0.8	15	0.045	0.6	189	169
BEVQ100M(A)VE + FXUQ100M(A)V1				1.3	15	0.090	1.0	298	278
BEVQ125M(A)VE + FXUQ125M(A)V1									

Symbols:

MCA : Min. Circuit Amps (A)
MFA : Max. Fuse Amps (See note 5)
KW : Fan Motor Rated Output(KW)
FLA : Full Load Amps(A)
IFM : Indoor Fan Motor

Note:

1. Voltage range
   Units are suitable for use on electrical systems where voltage supplied to unit terminals is not below or above listed range limits.
2. Maximum allowable voltage unbalance between phases is 2%.
3. MCA/MFA
   MCA = 1.25 X FLA
   MFA ≦ 4 X FLA
   (Next lower standard fuse rating. Min. 15A)
4. Select wire size based on the MCA.
5. Instead of fuse, use Circuit Breaker.

C: 4D034128B

11

7. Capacity Tables

7.1 Cooling Capacity

FXUQ-MA **[50Hz]**

Cooling capacity

Unit Size	Outdoor air temp. °CDB	Indoor air temp. 14.0°CWB 20°CDB TC	14.0°CWB 20°CDB SHC	16.0°CWB 23°CDB TC	16.0°CWB 23°CDB SHC	18.0°CWB 26°CDB TC	18.0°CWB 26°CDB SHC	19.0°CWB 27°CDB TC	19.0°CWB 27°CDB SHC	20.0°CWB 28°CDB TC	20.0°CWB 28°CDB SHC	22.0°CWB 30°CDB TC	22.0°CWB 30°CDB SHC	24.0°CWB 32°CDB TC	24.0°CWB 32°CDB SHC
71	10.0	5.4	4.8	6.4	5.2	7.5	5.8	8.0	6.0	8.5	6.0	9.6	6.2	10.5	6.3
	12.0	5.4	4.8	6.4	5.2	7.5	5.8	8.0	6.0	8.5	6.0	9.6	6.2	10.4	6.2
	14.0	5.4	4.8	6.4	5.2	7.5	5.8	8.0	6.0	8.5	6.0	9.6	6.2	10.3	6.2
	16.0	5.4	4.8	6.4	5.2	7.5	5.8	8.0	6.0	8.5	6.0	9.6	6.2	10.1	6.1
	18.0	5.4	4.8	6.4	5.2	7.5	5.8	8.0	6.0	8.5	6.0	9.6	6.2	10.0	6.0
	20.0	5.4	4.8	6.4	5.2	7.5	5.8	8.0	6.0	8.5	6.0	9.6	6.2	9.8	5.9
	21.0	5.4	4.8	6.4	5.2	7.5	5.8	8.0	6.0	8.5	6.0	9.6	6.2	9.8	5.9
	23.0	5.4	4.8	6.4	5.2	7.5	5.8	8.0	6.0	8.5	6.0	9.4	6.2	9.6	5.8
	25.0	5.4	4.8	6.4	5.2	7.5	5.8	8.0	6.0	8.5	6.0	9.3	6.1	9.5	5.7
	27.0	5.4	4.8	6.4	5.2	7.5	5.8	8.0	6.0	8.5	6.0	9.2	6.0	9.4	5.7
	29.0	5.4	4.8	6.4	5.2	7.5	5.8	8.0	6.0	8.5	6.0	9.0	5.9	9.2	5.7
	31.0	5.4	4.8	6.4	5.2	7.5	5.8	8.0	6.0	8.5	6.0	8.9	5.8	9.1	5.6
	33.0	5.4	4.8	6.4	5.2	7.5	5.8	8.0	6.0	8.5	6.0	8.7	5.8	8.9	5.6
	35.0	5.4	4.8	6.4	5.2	7.5	5.8	8.0	6.0	8.4	6.0	8.6	5.7	8.8	5.5
	37.0	5.4	4.8	6.4	5.2	7.5	5.8	8.0	5.9	8.3	6.0	8.5	5.8	8.7	5.4
	39.0	5.4	4.8	6.4	5.2	7.5	5.8	8.0	6.1	8.1	5.9	8.3	5.6	8.5	5.4
100	10.0	7.6	6.6	9.0	7.1	10.5	8.0	11.2	8.2	11.9	8.3	13.4	8.4	14.7	8.5
	12.0	7.6	6.6	9.0	7.1	10.5	8.0	11.2	8.2	11.9	8.3	13.4	8.4	14.5	8.4
	14.0	7.6	6.6	9.0	7.1	10.5	8.0	11.2	8.2	11.9	8.3	13.4	8.4	14.4	8.3
	16.0	7.6	6.6	9.0	7.1	10.5	8.0	11.2	8.2	11.9	8.3	13.4	8.4	14.2	8.2
	18.0	7.6	6.6	9.0	7.1	10.5	8.0	11.2	8.2	11.9	8.3	13.4	8.4	14.0	8.1
	20.0	7.6	6.6	9.0	7.1	10.5	8.0	11.2	8.2	11.9	8.3	13.4	8.4	13.8	8.0
	21.0	7.6	6.6	9.0	7.1	10.5	8.0	11.2	8.2	11.9	8.3	13.4	8.4	13.7	7.9
	23.0	7.6	6.6	9.0	7.1	10.5	8.0	11.2	8.2	11.9	8.3	13.2	8.2	13.5	7.8
	25.0	7.6	6.6	9.0	7.1	10.5	8.0	11.2	8.2	11.9	8.3	13.0	8.1	13.3	7.7
	27.0	7.6	6.6	9.0	7.1	10.5	8.0	11.2	8.2	11.9	8.3	12.8	8.0	13.1	7.7
	29.0	7.6	6.6	9.0	7.1	10.5	8.0	11.2	8.2	11.9	8.3	12.6	7.9	12.9	7.6
	31.0	7.6	6.6	9.0	7.1	10.5	8.0	11.2	8.2	11.9	8.3	12.4	7.9	12.7	7.6
	33.0	7.6	6.6	9.0	7.1	10.5	8.0	11.2	8.2	11.9	8.3	12.2	7.8	12.5	7.6
	35.0	7.6	6.6	9.0	7.1	10.5	8.0	11.2	8.2	11.8	8.3	12.1	7.7	12.3	7.4
	37.0	7.6	6.6	9.0	7.1	10.5	8.0	11.2	8.2	11.6	8.3	11.9	7.7	12.2	7.3
	39.0	7.6	6.6	9.0	7.1	10.5	8.0	11.2	8.2	11.4	8.2	11.7	7.6	12.0	7.3
125	10.0	9.5	8.0	11.3	9.0	13.1	9.9	14.0	10.4	14.9	10.6	16.8	10.7	18.4	10.8
	12.0	9.5	8.0	11.3	9.0	13.1	9.9	14.0	10.4	14.9	10.6	16.8	10.7	18.2	10.7
	14.0	9.5	8.0	11.3	9.0	13.1	9.9	14.0	10.4	14.9	10.6	16.8	10.7	18.0	10.5
	16.0	9.5	8.0	11.3	9.0	13.1	9.9	14.0	10.4	14.9	10.6	16.8	10.7	17.7	10.4
	18.0	9.5	8.0	11.3	9.0	13.1	9.9	14.0	10.4	14.9	10.6	16.8	10.7	17.5	10.2
	20.0	9.5	8.0	11.3	9.0	13.1	9.9	14.0	10.4	14.9	10.6	16.8	10.7	17.2	10.1
	21.0	9.5	8.0	11.3	9.0	13.1	9.9	14.0	10.4	14.9	10.6	16.8	10.7	17.1	10.0
	23.0	9.5	8.0	11.3	9.0	13.1	9.9	14.0	10.4	14.9	10.6	16.5	10.5	16.9	9.9
	25.0	9.5	8.0	11.3	9.0	13.1	9.9	14.0	10.4	14.9	10.6	16.3	10.4	16.6	9.9
	27.0	9.5	8.0	11.3	9.0	13.1	9.9	14.0	10.4	14.9	10.6	16.1	10.2	16.4	9.8
	29.0	9.5	8.0	11.3	9.0	13.1	9.9	14.0	10.4	14.9	10.6	15.8	10.1	16.2	9.7
	31.0	9.5	8.0	11.3	9.0	13.1	9.9	14.0	10.4	14.9	10.6	15.6	10.0	15.9	9.6
	33.0	9.5	8.0	11.3	9.0	13.1	9.9	14.0	10.4	14.9	10.6	15.3	9.9	15.7	9.6
	35.0	9.5	8.0	11.3	9.0	13.1	9.9	14.0	10.4	14.8	10.5	15.1	9.9	15.4	9.4
	37.0	9.5	8.0	11.3	9.0	13.1	9.9	14.0	10.4	14.5	10.5	14.9	9.8	15.2	9.4
	39.0	9.5	8.0	11.3	9.0	13.1	9.9	14.0	10.4	14.3	10.2	14.6	9.6	15.0	9.3

TC Total capacity ; kW
SHC Sensible heat capacity ; kW

Refer to Outdoor Unit Capacity Tables : on page 339~, for the actual performance data of each indoor and outdoor unit combination.

7.2 Heating Capacity

FXUQ-MA **[50Hz]**

Heating capacity

Unit Size	Outdoor air temp. °CDB	Outdoor air temp. °CWB	Indoor air temp. °CDB 16.0 kW	18.0 kW	20.0 kW	21.0 kW	22.0 kW	24.0 kW
71	-19.8	-20.0	5.3	5.3	5.3	5.3	5.3	5.3
	-18.8	-19.0	5.5	5.5	5.4	5.4	5.4	5.4
	-16.7	-17.0	5.8	5.8	5.8	5.7	5.7	5.7
	-14.7	-15.0	6.1	6.1	6.1	6.1	6.1	6.1
	-12.6	-13.0	6.4	6.4	6.4	6.4	6.4	6.4
	-10.5	-11.0	6.7	6.7	6.7	6.7	6.7	6.7
	-9.5	-10.0	6.9	6.9	6.9	6.9	6.9	6.8
	-8.5	-9.1	7.1	7.0	7.0	7.0	7.0	7.0
	-7.0	-7.6	7.3	7.3	7.3	7.3	7.2	7.2
	-5.0	-5.6	7.6	7.6	7.6	7.6	7.5	7.5
	-3.0	-3.7	7.9	7.9	7.9	7.9	7.9	7.9
	0.0	-0.7	8.4	8.4	8.3	8.3	8.3	7.9
	3.0	2.2	8.9	8.8	8.8	8.7	8.4	7.9
	5.0	4.1	9.1	9.1	9.0	8.7	8.4	7.9
	7.0	6.0	9.5	9.4	9.0	8.7	8.4	7.9
	9.0	7.9	9.8	9.6	9.0	8.7	8.4	7.9
	11.0	9.8	10.1	9.6	9.0	8.7	8.4	7.9
	13.0	11.8	10.1	9.6	9.0	8.7	8.4	7.9
	15.0	13.7	10.1	9.6	9.0	8.7	8.4	7.9
100	-19.8	-20.0	7.4	7.4	7.3	7.3	7.3	7.3
	-18.8	-19.0	7.6	7.6	7.6	7.5	7.5	7.5
	-16.7	-17.0	8.0	8.0	8.0	8.0	8.0	8.0
	-14.7	-15.0	8.5	8.5	8.4	8.4	8.4	8.4
	-12.6	-13.0	8.9	8.9	8.9	8.9	8.9	8.8
	-10.5	-11.0	9.4	9.3	9.3	9.3	9.3	9.3
	-9.5	-10.0	9.6	9.6	9.5	9.5	9.5	9.5
	-8.5	-9.1	9.8	9.8	9.7	9.7	9.7	9.7
	-7.0	-7.6	10.1	10.1	10.1	10.1	10.1	10.0
	-5.0	-5.6	10.6	10.5	10.5	10.5	10.5	10.5
	-3.0	-3.7	11.0	11.0	10.9	10.9	10.9	10.9
	0.0	-0.7	11.6	11.6	11.6	11.6	11.6	10.9
	3.0	2.2	12.3	12.3	12.2	12.1	11.7	10.9
	5.0	4.1	12.7	12.7	12.5	12.1	11.7	10.9
	7.0	6.0	13.1	13.1	12.5	12.1	11.7	10.9
	9.0	7.9	13.5	13.3	12.5	12.1	11.7	10.9
	11.0	9.8	14.0	13.3	12.5	12.1	11.7	10.9
	13.0	11.8	14.1	13.3	12.5	12.1	11.7	10.9
	15.0	13.7	14.1	13.3	12.5	12.1	11.7	10.9
125	-19.8	-20.0	8.3	8.2	8.2	8.2	8.2	8.2
	-18.8	-19.0	8.5	8.5	8.4	8.4	8.4	8.4
	-16.7	-17.0	9.0	9.0	9.0	8.9	8.9	8.9
	-14.7	-15.0	9.5	9.5	9.5	9.4	9.4	9.4
	-12.6	-13.0	10.0	10.0	10.0	10.0	9.9	9.9
	-10.5	-11.0	10.5	10.5	10.4	10.4	10.4	10.4
	-9.5	-10.0	10.8	10.7	10.7	10.7	10.7	10.6
	-8.5	-9.1	11.0	10.9	10.9	10.9	10.9	10.8
	-7.0	-7.6	11.3	11.3	11.3	11.3	11.2	11.2
	-5.0	-5.6	11.8	11.8	11.8	11.8	11.7	11.7
	-3.0	-3.7	12.3	12.3	12.3	12.2	12.2	12.2
	0.0	-0.7	13.0	13.0	13.0	13.0	13.1	12.2
	3.0	2.2	13.8	13.7	13.7	13.6	13.1	12.2
	5.0	4.1	14.2	14.2	14.0	13.6	13.1	12.2
	7.0	6.0	14.7	14.7	14.0	13.6	13.1	12.2
	9.0	7.9	15.2	14.9	14.0	13.6	13.1	12.2
	11.0	9.8	15.6	14.9	14.0	13.6	13.1	12.2
	13.0	11.8	15.8	14.9	14.0	13.6	13.1	12.2
	15.0	13.7	15.8	14.9	14.0	13.6	13.1	12.2

Refer to Outdoor Unit Capacity Tables : on page 342~, for the actual performance data of each indoor and outdoor unit combination.

8. Air Velocity and Temperature Distributions (Reference Data)

FXUQ71MA

COOLING • AIR VELOCITY DISTRIBUTION

4 WAY DISCHARGE AIR FLOW DIRECTION : HORIZONTAL

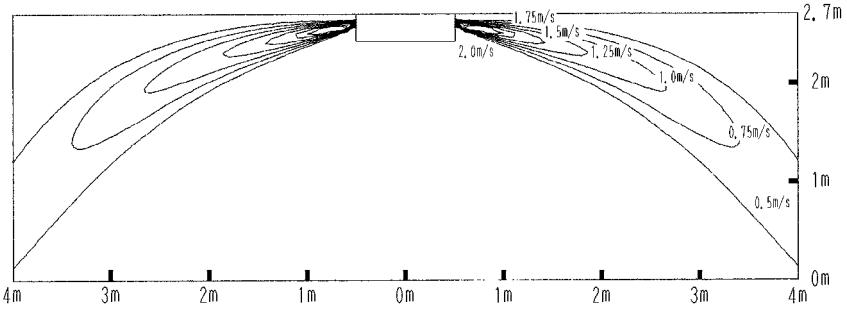

COOLING • AIR TEMPERATURE DISTRIBUTION

4 WAY DISCHARGE AIR FLOW DIRECTION : HORIZONTAL

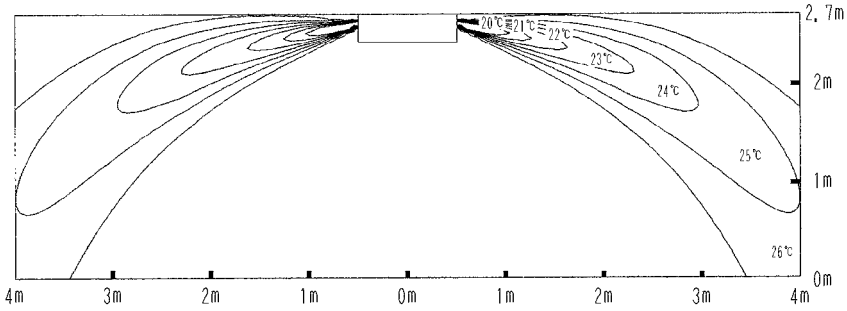

4D028396C

HEATING • AIR VELOCITY DISTRIBUTION

4 WAY DISCHARGE AIR FLOW DIRECTION : DOWN

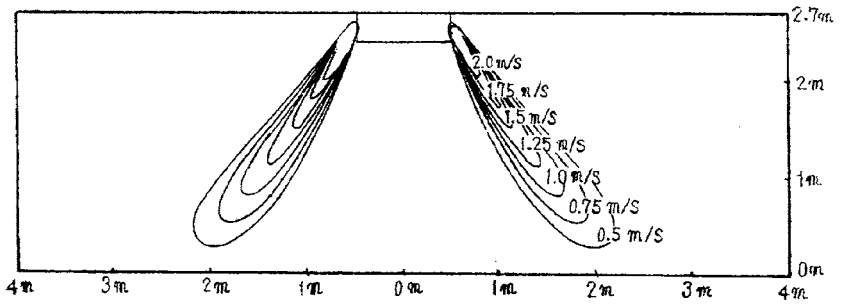

HEATING • AIR TEMPERATURE DISTRIBUTION

4 WAY DISCHARGE AIR FLOW DIRECTION : DOWN

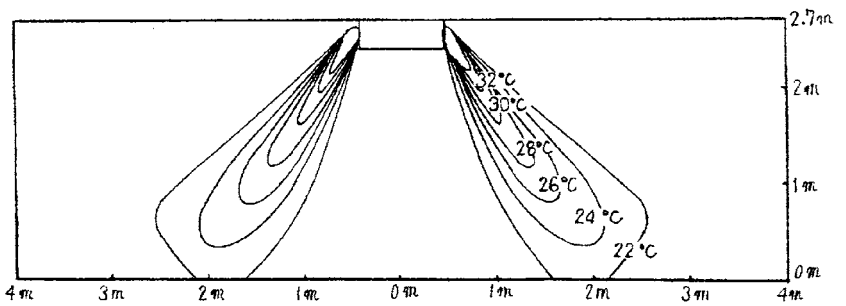

4D013863D

FXUQ100MA

COOLING · AIR VELOCITY DISTRIBUTION

4 WAY DISCHARGE AIR FLOW DIRECTION : HORIZONTAL

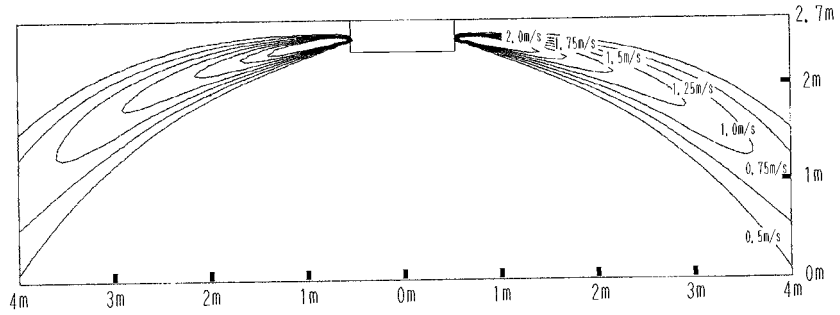

COOLING · AIR TEMPERATURE DISTRIBUTION

4 WAY DISCHARGE AIR FLOW DIRECTION : HORIZONTAL

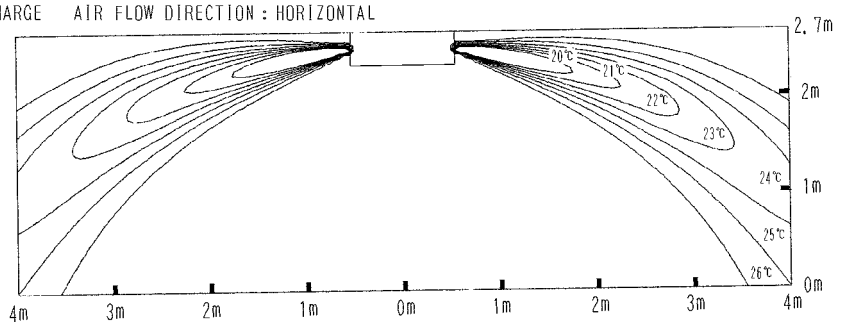

4D028397C

HEATING · AIR VELOCITY DISTRIBUTION

4 WAY DISCHARGE AIR FLOW DIRECTION : DOWN

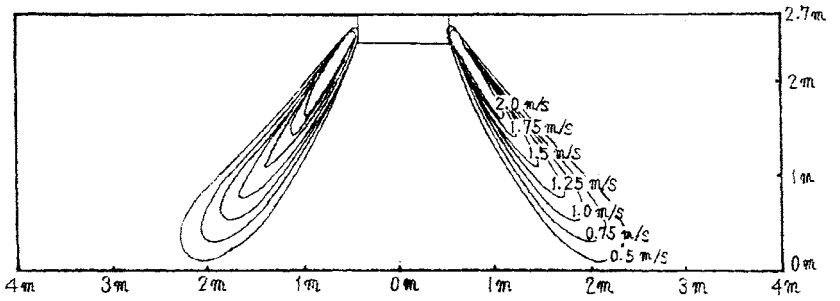

HEATING · AIR TEMPERATURE DISTRIBUTION

4 WAY DISCHARGE AIR FLOW DIRECTION : DOWN

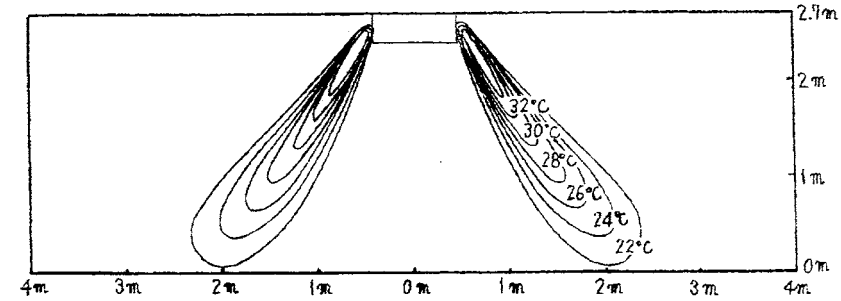

4D014054D

11

FXUQ125MA

COOLING • AIR VELOCITY DISTRIBUTION

4 WAY DISCHARGE AIR FLOW DIRECTION : HORIZONTAL

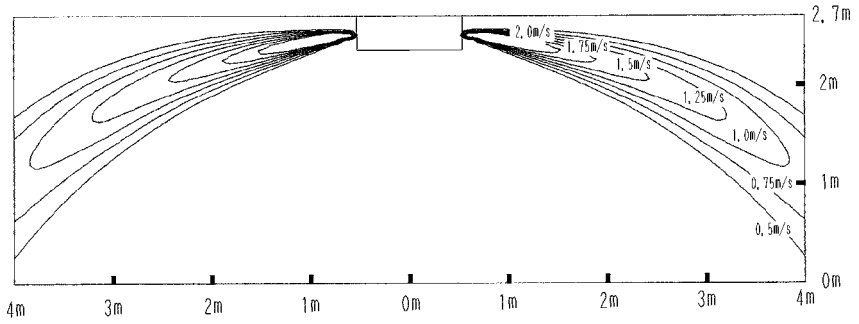

COOLING • AIR TEMPERATURE DISTRIBUTION

4 WAY DISCHARGE AIR FLOW DIRECTION : HORIZONTAL

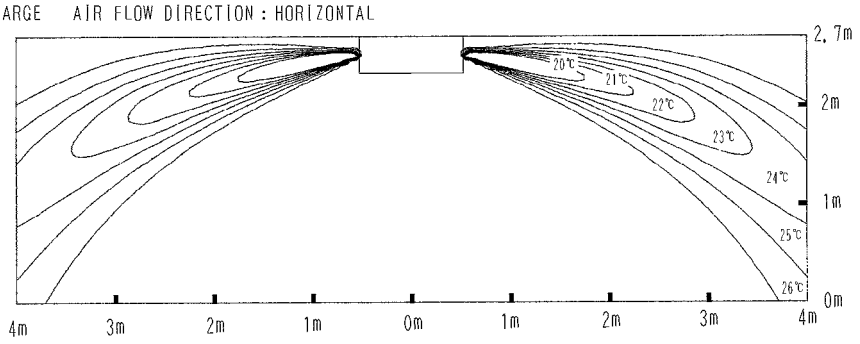

4D028398C

HEATING • AIR VELOCITY DISTRIBUTION

4 WAY DISCHARGE AIR FLOW DIRECTION : DOWN

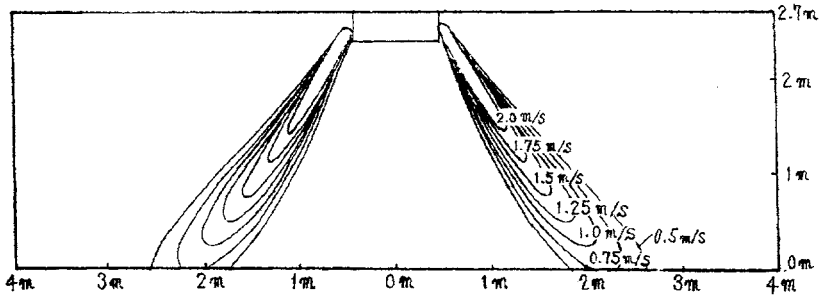

HEATING • AIR TEMPERATURE DISTRIBUTION

4 WAY DISCHARGE AIR FLOW DIRECTION : DOWN

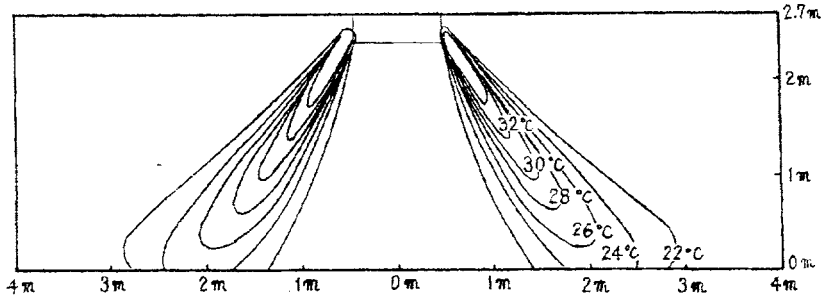

4D014055D

9. Sound Levels

Overall

■ **Ceiling Suspended Cassette Type (Connection unit series)**

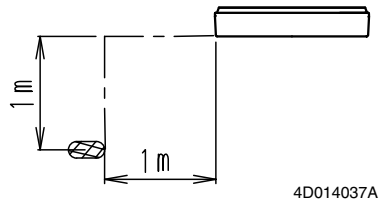

dBA

Model	230V, 50Hz	
	H	L
FXUQ71MAV1	40	35
FXUQ100MAV1	43	38
FXUQ125MAV1	44	39

Notes:

1. The operating conditions are assumed to be standard (JIS conditions).
2. These operating values were obtained in a dead room (conversion values).
   Sound level will vary depending on a range of factors such as the construction (acoustic absorption coefficient) of the particular room in which the equipments installed.

Octave Band Level

○——○ 230V

FXUQ71MAV1

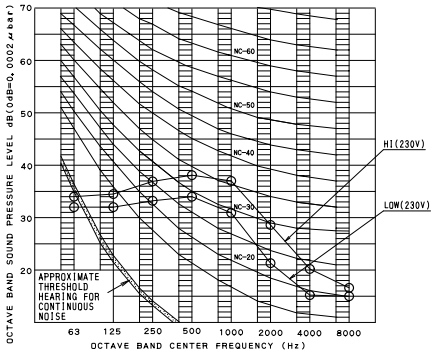

4D014037D

FXUQ100MAV1

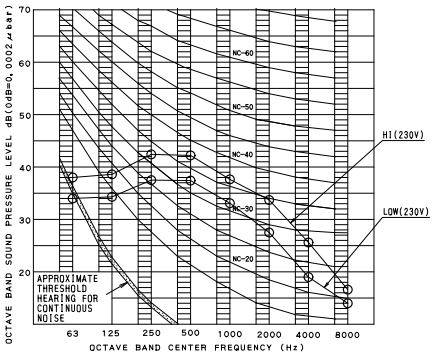

4D014038D

FXUQ125MAV1

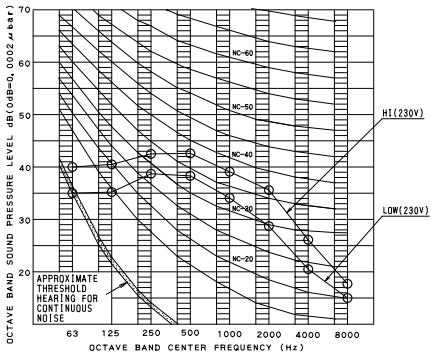

4D014039D

11

10. Installation

10.1 Indoor Units

Installation Example

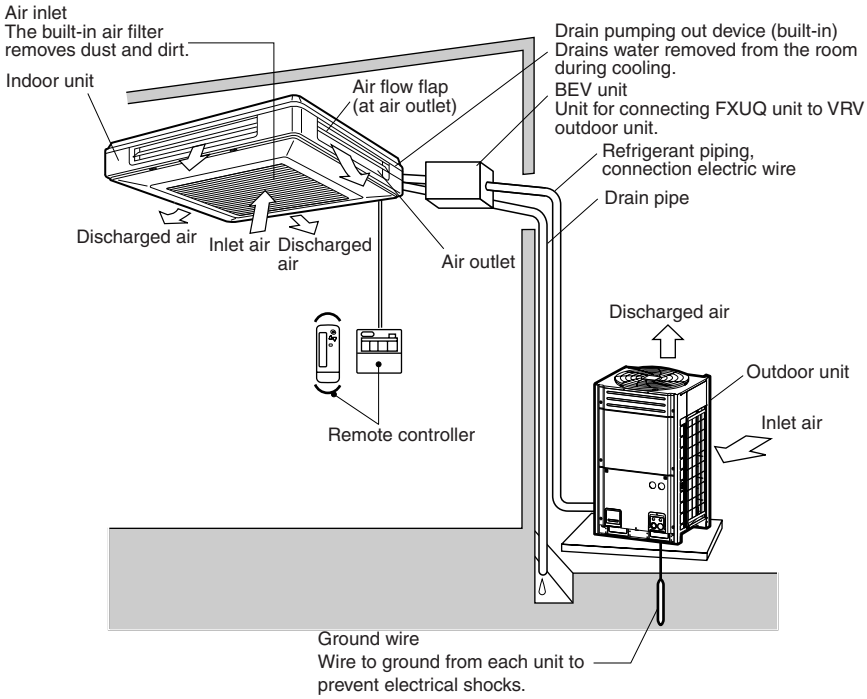

Service Space

Select an installation site where the following conditions are fulfilled and that meets your customer's approval.

- In the upper space (including the back of the ceiling) of the indoor unit where there is no possible dripping of water from the refrigerant pipe, drain pipe, water pipe, etc.
- Where optimum air distribution can be ensured.
- Where nothing blocks air passage.
- Where condensate can be properly drained.
- Where the ceiling is strong enough to bear the indoor unit weight.
- Where the false ceiling is not noticeably on an incline.
- Where sufficient clearance for maintenance and service can be ensured.
- Where there is no risk of flammable gas leakage.
- Where piping between indoor and outdoor units is possible within the allowable limit. (Refer to the installation manual for the outdoor and BEV units.)

[CAUTION]

Only use the included parts or parts which match the specifications when installing the unit.

- Install the indoor unit no less than 2.5 m above the floor. Where unavoidably lower, take what measures are necessary to keep hands out of the air outlet.

Space required for installation

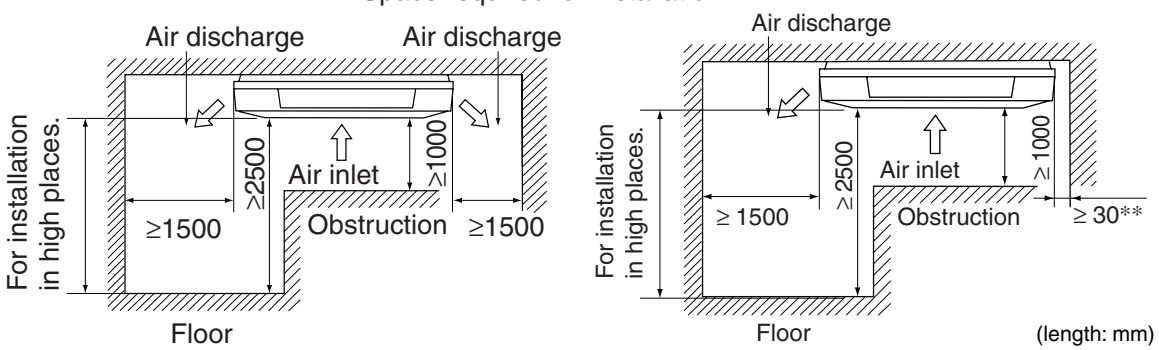

(length: mm)

** Space is required to attach/detach corner covers.

(V2324)

Bolt Pitch

1. FOR 4-WAY AIR DISCHARGE

1. **Relation of holes for indoor unit, suspension bolt position, piping and wiring. (Refer to Fig. 2)**
   (Illustrations seen from ceiling)
   * Dimensions in ( ) for 100 and 125 models
   *** Suspension bolt pitch

2. **Make holes for suspension bolts, refrigerant and drain piping, and wiring. (Refer to Fig. 3)**
   - Refer to the paper patten for the locations.
   - Select the location for each of holes and open the holes in the ceiling.

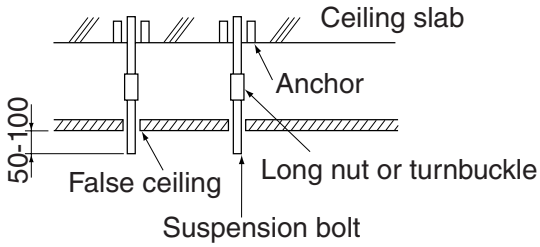

Fig. 3

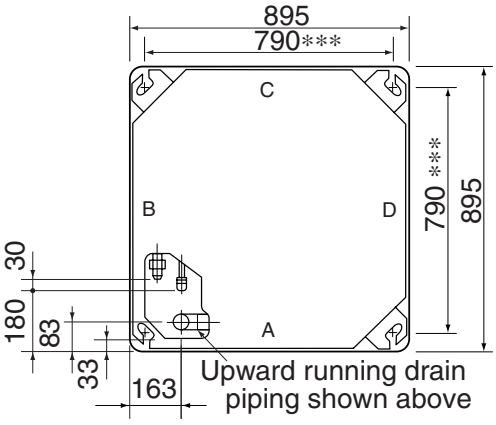

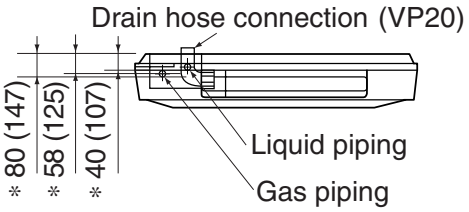

Fig. 2

NOTE
All the above parts are field supplied.

(V2325)

11

2. FOR 2-WAY OR 3-WAY AIR DISCHARGE

2-way and 3-way air discharge must be set from the remote controller. For details, see FIELD SETTING.

1. **Relation of holes for indoor unit, suspension bolt position, piping and wiring. (Refer to Fig. 8)**

NOTE
Illustrations seen from ceiling
* Dimension in ( ) for 100 and 125 models
***Suspension bolt pitch

2. **Make holes for suspension bolts, refrigerant and drain piping, and wiring. (Refer to Fig. 9)**
   - Refer to paper pattern for the locations.
   - Select the location for each of holes and open the holes in the ceiling.

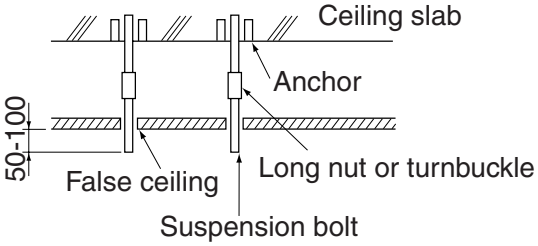

Fig. 9

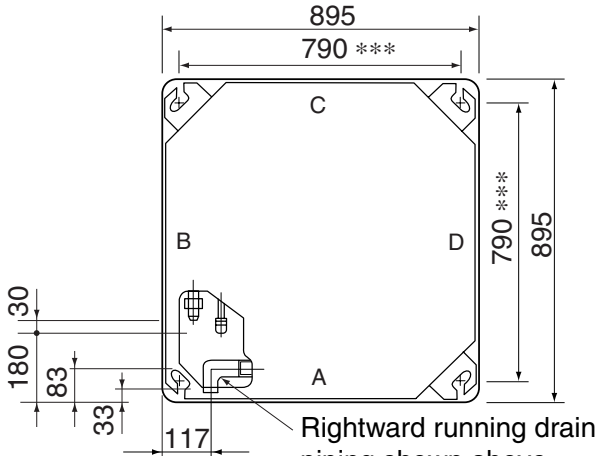

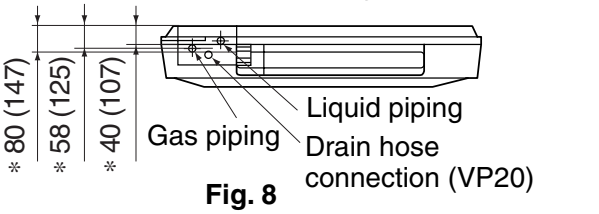

Fig. 8

(V2326)

Drain Piping Work

1. Rig drain piping (Refer to Fig. 26)

As for drain work, perform piping in such a manner that water can be drained properly.
As for drain piping, the connection can be made from three different directions.

- Employ a pipe with either the same diameter or with the diameter larger (excluding the raising section) than that of the connecting pipe (PVC pipe, nominal diameter 20 mm, outside diameter 26 mm).
- Keep the drain pipe short and sloping downwards at a gradient of at least 1/100 to prevent air pockets from forming. **(Refer to Fig. 27)**

⚠ CAUTION

Water pooling in the drainage piping can cause the drain to clog.

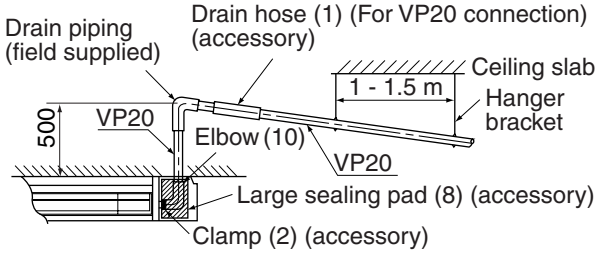

Fig. 26

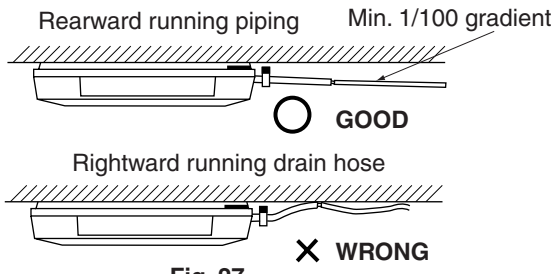

Fig. 27

(V2327)

- To keep the drain hose from sagging, space hanging wires every 1 to 1.5 m. **(Refer to Fig. 26)**
- Use only the included drain hose (1), (for rightward running drain hose) or elbow (10) (for upward running drain hose) and clamp (2).
- Fit the drain hose (1) or elbow (10) over the drain pipe up to the neck and fasten tight with the clamp (2).
- Insulate the clamp (2) and drain hose or elbow (10) with the included sealing pad (8). **(Refer to Fig.28)**
- Make sure that heat insulation work is executed on the following 2 spots to prevent any possible water leakage due to dew condensation.
  - Insulate the drain hose inside the building.
  - Drain socket

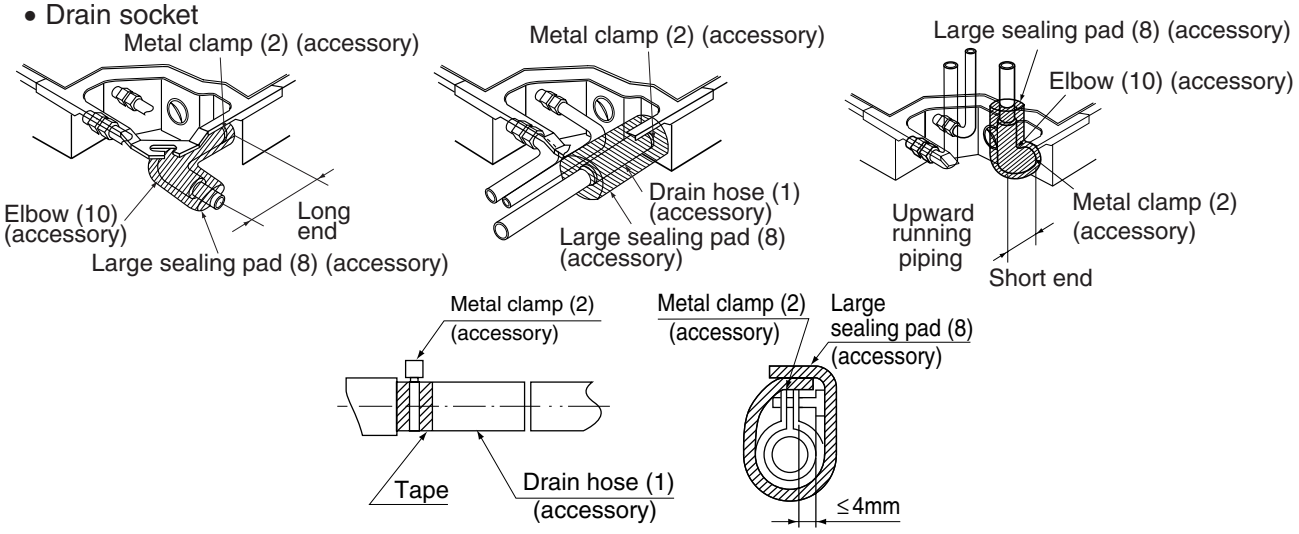

Fig. 28

⚠ CAUTION

- Do not twist or bend the drain hose (1), so that excessive force is not applied to it, as this could cause leaks.

- If converging multiple drain piping, install according to the procedure shown below. **(Refer to Fig. 29)**

Select converging drain piping whose gauge is suitable for the operating capacity of the unit.

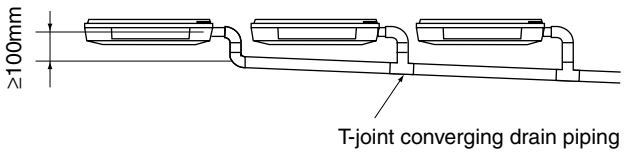

Fig. 29

PRECAUTIONS FOR UPWARD DRAIN RAISING PIPING

- Install the drain raising pipes at a height of less than 500 mm.
- Install the drain raising pipes at a right angle to the indoor unit. **(Refer to Fig. 30)**

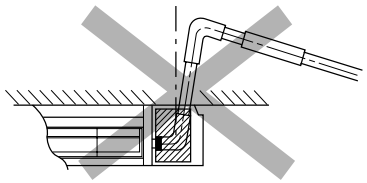

WRONG

Fig. 30

⚠ CAUTION

If the upward running drain hose leans at a slant, the float switch will malfunction and water will leak.

(V2328)

2. **After piping work is finished, check if drainage flows smoothly.**
   - Open the water inlet lid, add approximately 1 liter of water slowly and check drainage flow. **(Refer to Fig. 31)**

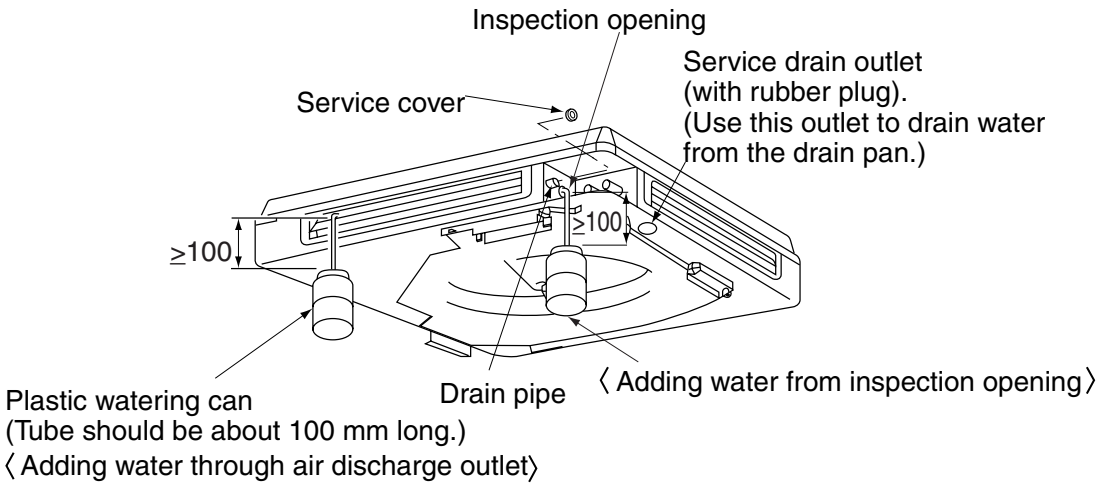

Method of adding water

Fig. 31 (V2329)

[Caution]

Drain piping connections

- Do not connect the drain piping directly to sewage pipes that smell of ammonia. The ammonia in the sewage might enter the indoor unit through the drain pipes and corrode the heat exchanger.

11

CAUTION

- Electrical wiring work should be done by a certified electrician.
- If someone who does not have the proper qualifications performs the work, perform the following after the test run is complete.

- Remove the control box lid and change the emergency switch above the PC board assembly of the indoor unit from “NORM.” to “EMERG.”. Connect the single-phase power supply (1, 3) and ground wire to the inter-unit wiring (50Hz 220-240V) terminal block and confirm drain operation.Be sure to change the switch before turning on the power. **(Refer to Fig. 32)**

CAUTION

- Clamp solidly to clamp C to tension is not added to the wiring connections.
- Be aware that the fan will turn during the operation.

- After confirming drainage, turn off the power and be sure to change the emergency switch back to “NORM.”.

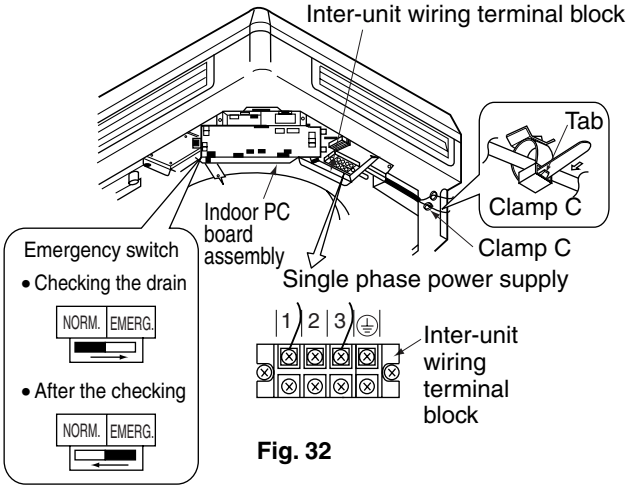

Fig. 32

(V2330)

10.2 Connecting Units

Before Installation

- **When moving the unit while removing it from the carton box, be sure to lift it by holding on to the two lifting lugs without exerting any pressure on other parts, especially, the refrigerant piping.**
- Be sure to check the type of R-410A refrigerant to be used before installing the unit. (Using an incorrect refrigerant will prevent normal operation of the unit.)
- BEV unit is an electronic expansion valve unit for allowing the indoor unit to be connected to the system for the VRV system.
- BEV unit may only be connected to the models shown in the table below. Do not attempt connection with other models.

Indoor unit
Ceiling Suspended Cassette Type

- See the included installation manuals on the VRV outdoor unit and the ceiling suspended cassette type indoor unit for details.
- For the indoor unit connected to the BEV unit, cooling/heating cannot be switched over with the remote controller.
- When the cooling/heating free system is connected to the BS unit, a cooling/heating selection right is allowed.
- When the ceiling suspended cassette type indoor unit and BEV unit are used for all indoor units, a separate “Cool/Heat SELECTOR” is needed to enable the cooling/heating switchover.

Service Space.

《 When hanging the unit from the ceiling 》

Install so that the control box lid is facing down.

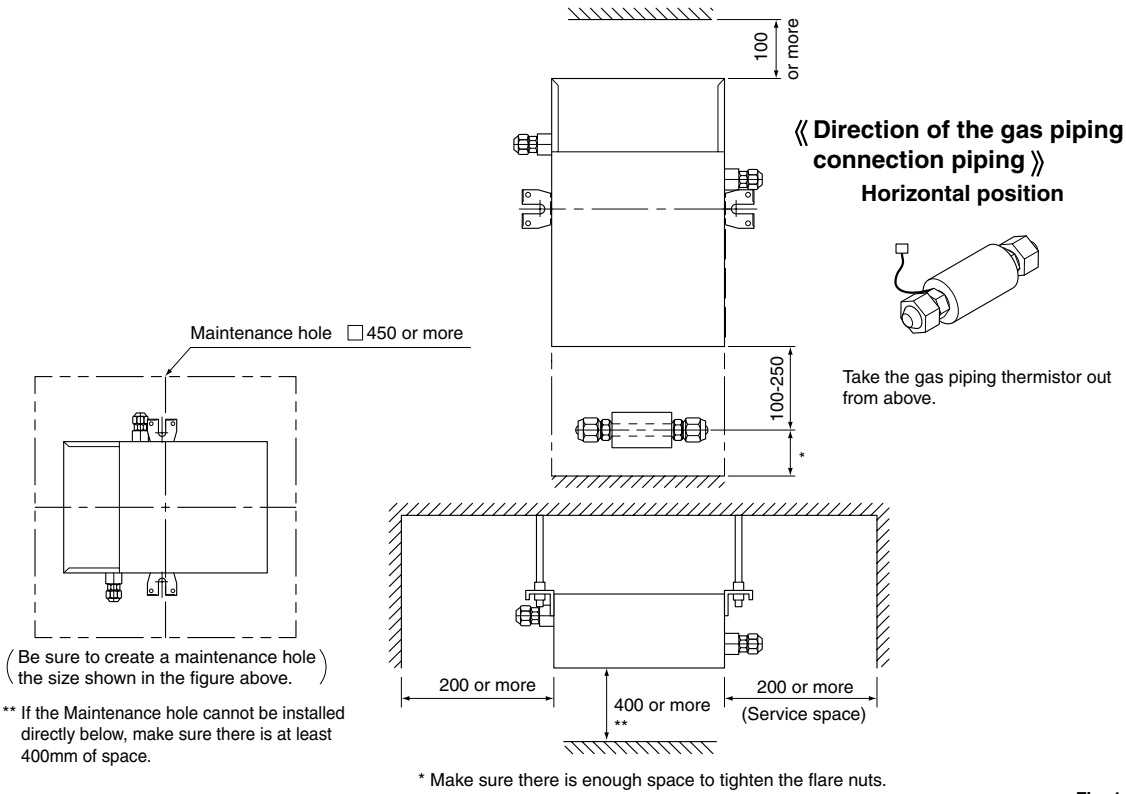

Fig. 1

(length: mm)

.

《When installing the unit on a wall》

Make sure the wiring outtake is facing down, and no other direction.

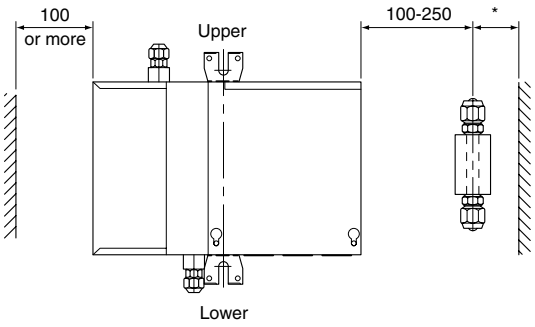

* Make sure there is enough space to tighten the flare nuts.

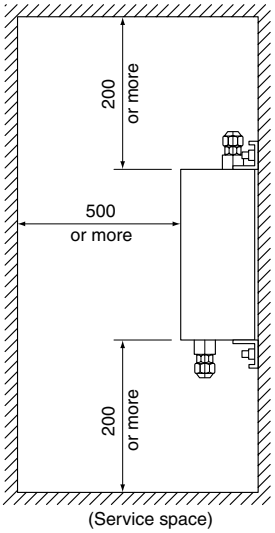

《Direction of the gas piping connection piping》

Upright and diagonal position

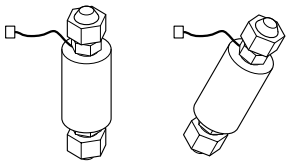

Take the gas piping thermistor out from above.

Fig. 2
(length: mm)

Bolt Pitch

《 When hanging the unit from the ceiling 》

(1) Check the relative locations of ceiling hole, unit, and hanging bolts.

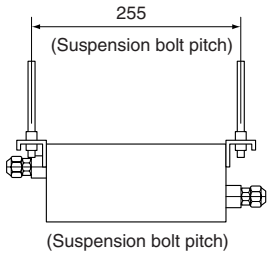

Fig. 3 (length: mm)

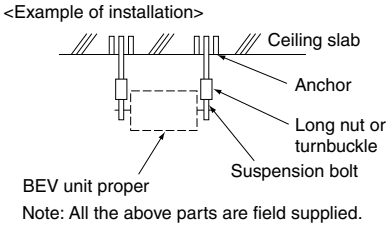

Note: All the above parts are field supplied.

Fig. 4

(2) Open the eyebolt holes or the holes for passing the piping and wiring out of the unit.
- Set the locations for the above holes, open them up and then lay the piping (refrigerant) and wiring (including both power supply and transmission wiring) up to the piping and wiring connections in the unit.
- It might be necessary to reinforce the ceiling frame to maintain the levelness and to prevent vibration. Consult an architect or carpenter for details.

(3) Install the hanging bolts. (Use M8 hanging bolts.)
- If it is pre-set, use hole-in anchors. Otherwise, use embedded inserts or embedded foundation bolts to make sure that the weight of the unit can be supported. Adjust the distance to the ceiling beforehand.

《 When installing the unit on a wall 》

(1) Check the relative locations of ceiling hole, unit, and hanging bolts.

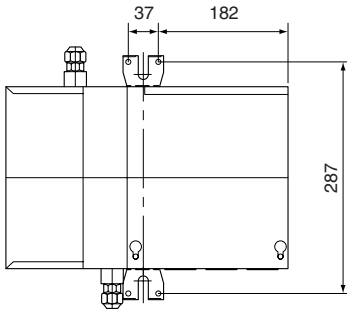

(length: mm)

Fig. 5

- Use only accessories and parts which are of the designated specification when installing.

《 When hanging the unit from the ceiling 》

(1) Temporarily install the BEV unit.
- Mount the hanging fittings to hanging bolts. Secure the hanging fittings on the top and the bottom with nuts (M8, field supplied) and washers (M8: Outside diameter size 24 to 28 mm) (field supplied).

(2) Adjust the height of the main unit with the nut.
(3) Check that the main unit is installed on the level.
(4) Tighten the nut on both the top and the bottom to fix securely.

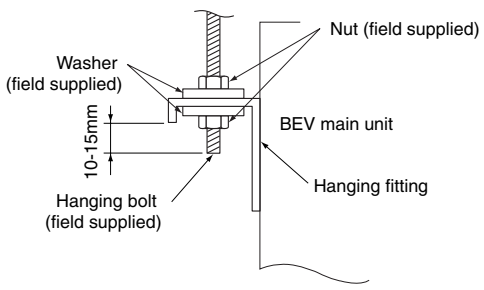

Fig. 6

《 When installing the unit on a wall 》

(1) Mount the hanging fittings with the mounting screws (4 pieces).
(2) Use M4 screws.

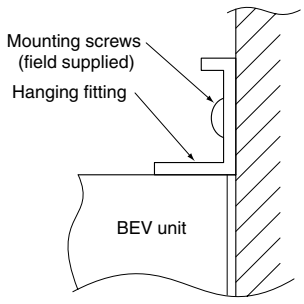

Fig. 7

11

Refrigerant Piping work

〈This shows the piping method between the outdoor unit and the BEV unit and the indoor unit. Select the pipe size and refrigerant branch kit depending on how the piping will be laid.〉
〈For refrigerant piping of outdoor units, see the installation manual attached to the outdoor unit.〉
〈Execute heat insulation work completely on both sides of the gas piping and the liquid piping. Otherwise, a water leakage can result sometimes.〉
〈When using a heat pump, the temperature of the gas piping can reach up to approximately 120˚C, so use insulation which is sufficiently resistant.〉
〈Improve the insulation on the refrigerant piping depending on the installation environment. If the insulation is not sufficient, condensation may form on the surface of the insulation.〉
〈Before refrigerant piping work, check which type of refrigerant is used. Proper operation is not possible if the types of refrigerant are not the same.〉

⚠ CAUTION

- **Use a pipe cutter and flare suitable for the type of refrigerant.**
- **Apply ester oil or ether oil around the flare section before connecting.**
- **To prevent dust, moisuture or other foreign matter from infiltrating the tube, either pinch the end or cover it with tape.**
- **Do not allow anything other than the designated refrigerant to get mixed into the refrigerant circuit, such as air, etc. If any refrigerant gas leaks while working on the unit, ventilate the room thoroughly right away.**

- The outdoor unit is charged with refrigerant.
- For the refrigerant piping and branching, follow the **"piping connection procedure"**.
- Be sure to use both a spanner and torque wrench together, as shown in the drawing, when connecting or disconnecting piping to/from the unit.
- Refer to the Table 1 for the dimensions of flare nut spaces.
- When connecting the flare nut, coat the flare both inside and outside with ester oil or ether oil and initially tighten by hand 3 or 4 turns before tightening firmly.
- Refer to the Table 1 to determine the proper tightening torque.

Table 1

Pipe size	Tightening torque	Flare dimension A (mm)	Flare shape
ϕ9.5 (3/8")	32.7 – 39.9N·m (333 – 407 kgf·cm)	12.8 – 13.2	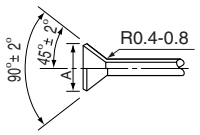
ϕ15.9 (5/8")	61.8 – 75.4N·m (630 – 770 kgf·cm)	19.3 – 19.7	

NOTE
The flare nuts used must be those included with the main body.

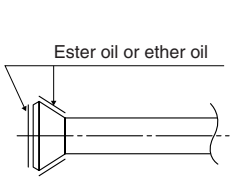

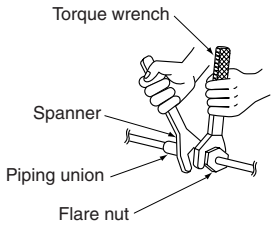

⚠ CAUTION

Over-tightening may damage the flare and cause a refrigerant leakage.

Not recommendable but in case of emergency

You must use a torque wrench but if you are obliged to install the unit without a torque wrench, you may follow the installation method mentioned below.

When you keep on tightening the flare nut with a spanner, there is a point where the tightening torque suddenly increases. From that position, further tighten the flare nut the angle shown below:

Table 2

Pipe size	Further tightening angle	Recommended arm length of tool
ϕ 9.5 (3/8")	60 to 90 degrees	Approx. 200mm
ϕ15.9 (5/8")	30 to 60 degrees	Approx. 300mm

After the work is finished, make sure to check that there is no gas leak.

- Make absolutely sure to execute heat insulation works on the pipe-connecting section after checking gas leakage by thoroughly studying the following figure.
- Wrap the insulation for fitting (3) (4) around the insulation for the joints on the liquid piping side and the gas piping side. **(Refer to Fig. 9, 10)**
- When installing the unit onto the ceiling, make sure that the seam between the insulation for fitting (3) (4) faces up. (Fasten both ends with the clamps (2).) (Fig.9, 10 shows the case of installation on the wall.)
- Wrap the included sealing pad (5) (6) around the insulation for fitting (3) (4). **(Refer to Fig. 8)**

⚠ CAUTION

Be sure to insulate any field piping all the way to the piping connection inside the unit. Any exposed piping may cause condensation or burns if touched.

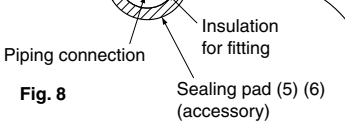

Fig. 8

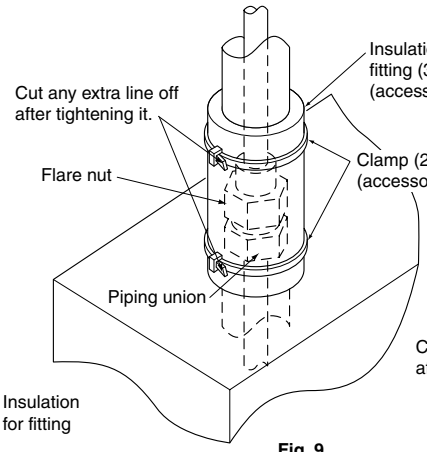

Fig. 9

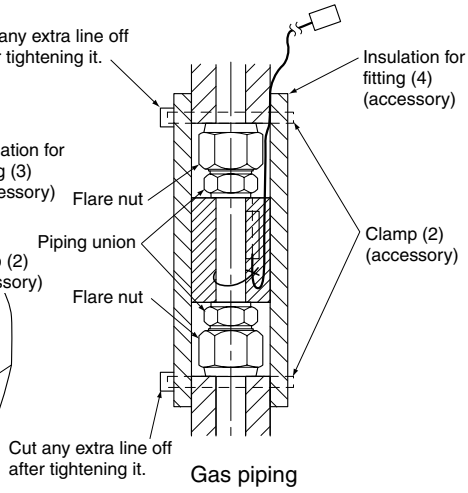

Fig. 10

⚠ CAUTION

CAUTION TO BE TAKEN WHEN BRAZING REFRIGERANT PIPING

Do not use flux when brazing refrigerant piping. Therefore, use the phosphor copper brazing filter metal (BCuP) which does not require flux.
(Flux has extremely harmful infulence on refrigerant piping sysems. For instance, if the chlorine based flux is used, it will cause piping corrosion or, in particular, if the flux contains fluorine, it will damage the refrigerant oil.)

- Before brazing local refrigerant piping, nitrogen gas shall be blown through the piping to expel air from the piping. If your brazing is done without nitrogen gas blowing, a large amount of oxide film develops inside the piping, and could cause system malfunction.
- When brazing the refrigerant piping, only begin brazing after having carried out nitrogen substitution or while inserting nitrogen into the refrigerant piping. Once this is done, connect the indoor unit with a flared connection.
- Nitrogen should be set to 0.02 MPa (0.2 kg/cm^2) with a pressure-reducing valve if brazing while inserting nitrogen into the piping.

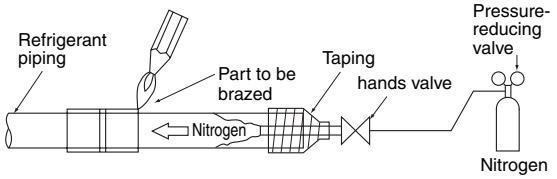

Fig. 11

⚠ CAUTION

Do not use anti-oxidants when brazing the piping joints. Residue can clog piping and break equipment.

11

Piping connection procedure

- Make sure the length of the refrigerant piping between the BEV unit and the indoor unit is no more than 5m and that the difference in height is at least 4m.

(1) Connection example for the indoor unit

- Only one indoor unit may be connected to each BEV unit.

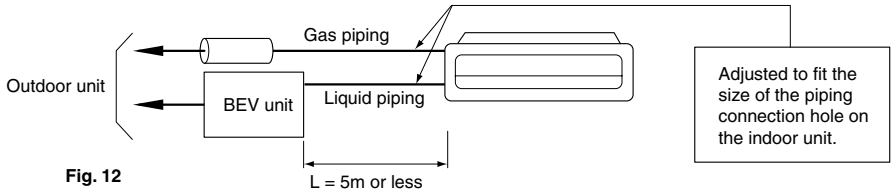

Fig. 12

(2) Height difference between indoor units

- Install the BEV unit in the 15m range of difference in height between the indoor units.
- Make sure the difference in height between the BEV unit and the indoor unit is no more than 4m.

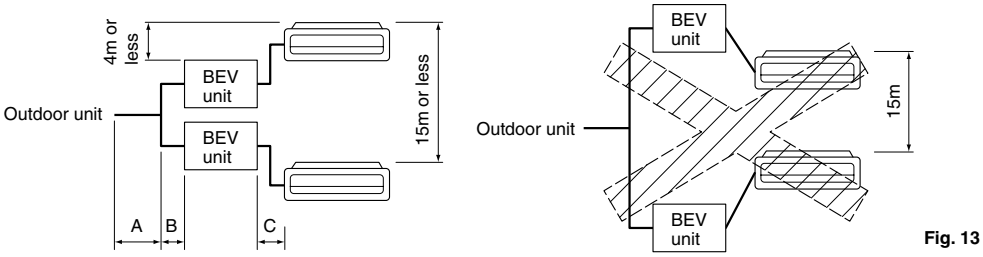

Fig. 13

(3) Allowable length after split (actual piping length)

B+C≤35m (length from the first branch piping to the indoor unit)

(4) Additional refrigerant amount

When measuring the amount of additional to refrigerant to fill, include the length of the liquid piping between the BEV unit and the indoor unit.

Additional filling amount = a+b+c+d+e+f+g+h+i+j+k+l+m+n+p+q

Refer also to the installation manual included with the outdoor unit.

Example of refrigerant branch using a REFNET joint

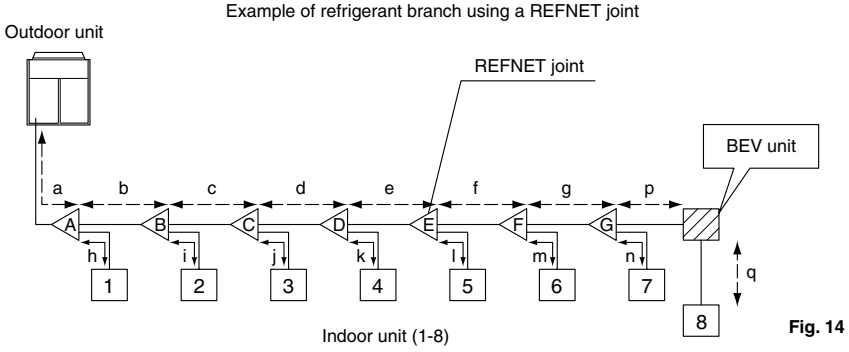

Fig. 14

Wiring Example and How to Set the Remote Controller

1 HOW TO CONNECT WIRINGS

- Connect the piping only after finishing the refrigerant piping work.
- Make sure all power supply is shut down to the unit first.
- As shown in the Fig. 16, loosen the two screws in the control box lid, remove it, and do the wiring work.
- Once all wiring is done, attach the control box lid and secure it with the screws.
  If you are using "4. DEF AULT SETTINGS," however, finish that and then attach the control box lid and secure it with the screws.

2 THE GAS PIPING THERMISTOR

- Connect to (X5A) on A1P.
- Bundle the gas piping thermistor lead wire and the branch wiring (transmission) using the included clamping material.
- Tension is not added to the gas pipe thermistor lead wire coming out of the unit.

• Power supply wiring • Ground wire

Connect the wiring to R (L) and S (N) on the power supply terminal block (X1M). Also, connect the ground wire to the ground terminal. Take the wiring and the ground wire into the unit through the wiring pass-through hole, and firmly secure them together using the included clamp (1).

• Indoor unit inter-unit wiring

Connect the wires to 1, 2, and 3 on the power supply terminal block (X1M). Take the wires into the unit through the wiring pass-through hole, and firmly secure them using the included clamp (1).

• Transmission wiring

Connect the wires to F1 and F2 on the transmission terminal block (X2M). Take them into the unit through the wiring pass-through hole, and firmly secure the gas piping thermister lead wire and the transmission wiring using the included clamp (1).

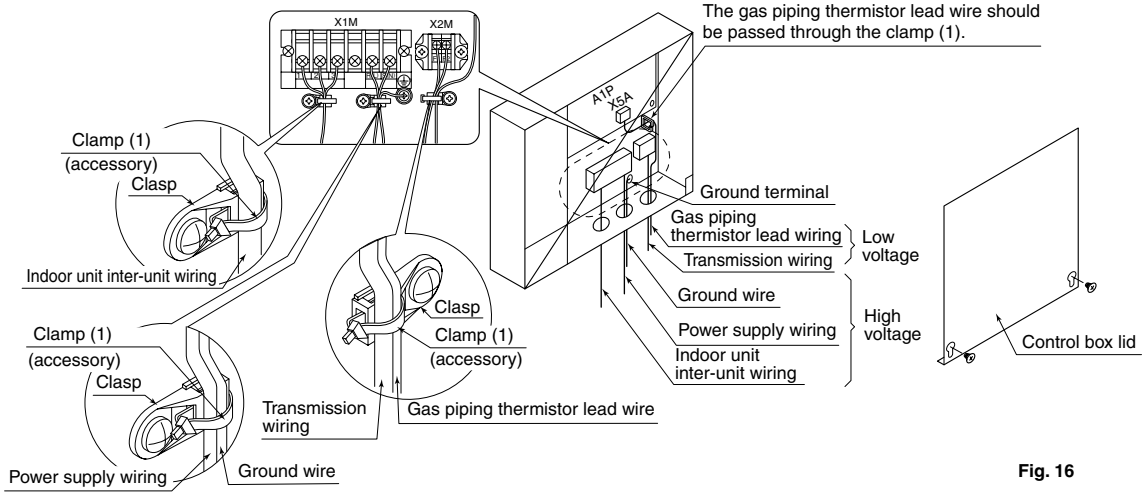

Fig. 16

[CAUTIONS]

- Do not under any circumstances connect the power supply wiring to the transmission terminal block (F1, F2), as this may cause damage to the entire system.

⚠ CAUTION

- When clamping wiring, use the included clamping material to prevent outside presure being exerted on the wiring connections and clamp firmly. When doing the wiring, make sure the wiring is neat and does not cause the control box lid to stick up, then close the cover firmly.
- When attaching the control box lid, make sure you do not pinch any wires.
- After all the wiring connections are done, fill in any gaps in the through holes with putty or insulation (procured locally) to prevent small animals and insects from entering the unit from outside. (If any do get in, they could cause short circuits in the control box.)
- Outside the machine, separate the weak wiring (gas piping thermistor lead wire, transmission wiring) and strong wiring (power supply wiring, inter-unit wiring, ground wire, and other power wiring) at least 50mm so that they do not pass through the same place together. Proximity may cause electrical interference, malfunctions, and breakage.

[PRECAUTIONS]

1. Use round crimp-style terminals for connecting wiring to the power supply terminal block.
   If unavailable, observe the following points when wiring.
   - Do not connect wiring of different gauge to the same power supply terminal. (Looseness in the connection may cause overheating.)
   - Use the specified electric wiring. Connect the wiring securely to the terminal. Lock the wiring down without applying excessive force to the terminal. (Tightening torque: 131N·cm ±10 %)

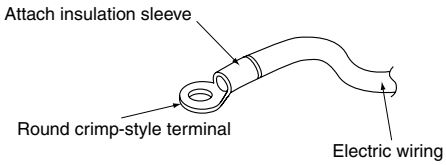

2. **Tightening torque for the terminal screws.**
   - Use the correct screwdriver for tightening the terminal screws. If the blade of screwdriver is too small, the head of the screw might be damaged, and the screw will not be properly tightened.
   - If the terminal screws are tightened too hard, screws might be damaged.
   - Refer to the table below for the tightening torque of the terminal screws.

Terminal	Size	Tightening torque
Transmission terminal block (2P)	M3.5	0.79 – 0.97N·m
Power supply and inter-unit wiring terminal block (6P)	M4	1.18 – 1.44N·m
Ground terminal	M4	1.44 – 1.94N·m

3. Do not connect wiring of different gauge to the same grounding terminal. Looseness in the connection may deteriorate protection.
4. Outside of the unit, keep the weak wiring (gas piping thermistor lead wire, transmission wiring) at least 50 mm away from strong wiring (power supply wiring, inter-unit wiring, ground wire, and other power wiring). The equipment may malfunction if subjected to electrical (external) noise.
5. For remote controller wiring, refer to the “INSTALLATION MANUAL OF REMOTE CONTROLLER” attached to the remote controller.
6. **Never connect power supply wiring to the terminal block for remote controller wiring. A mistake of the sort could damage the entire system.**
7. Use only specified wiring and tightly connect wiring to terminals. Be careful wiring do not place external stress on terminals. Keep wiring in neat order and so as not to obstruct other unit such as popping open the control box lid. Make sure the lid closes tight. Incomplete connections could result in overheating, and in worse case, electric shock or fire.

[WIRING EXAMPLE]

- Fit the power supply wiring of each unit with a switch and fuse as shown in the drawing.

COMPLETE SYSTEM EXAMPLE (3 systems)

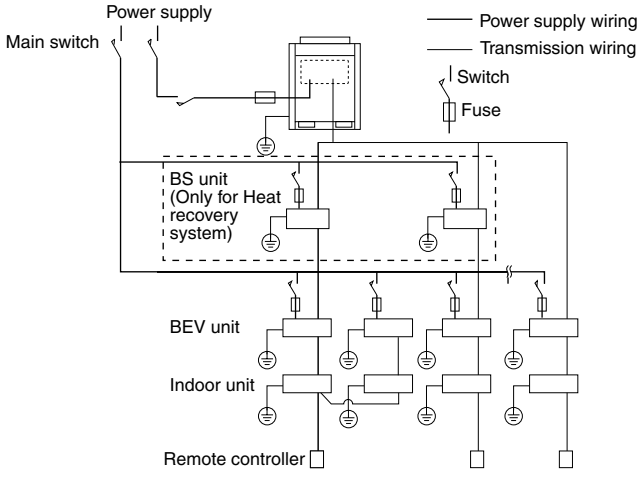

Fig. 17

1. When using 1 remote controller for 1 indoor unit. (Normal operation)

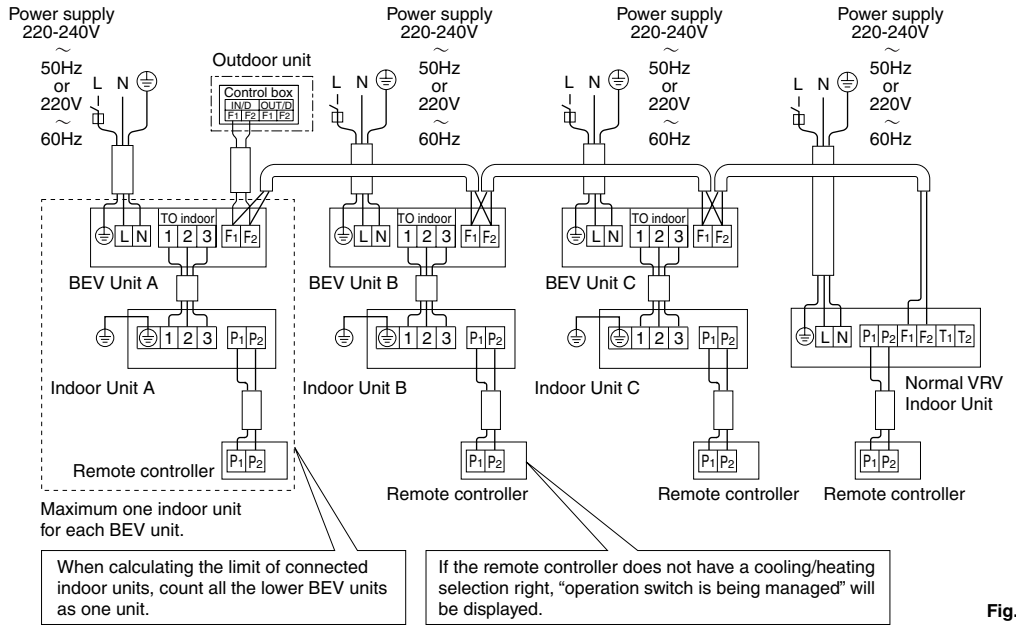

Fig. 18

<Caution>

Group control is not possible between ceiling suspended cassette type units and normal VRV indoor units.

2. For group control or use with 2 remote controllers

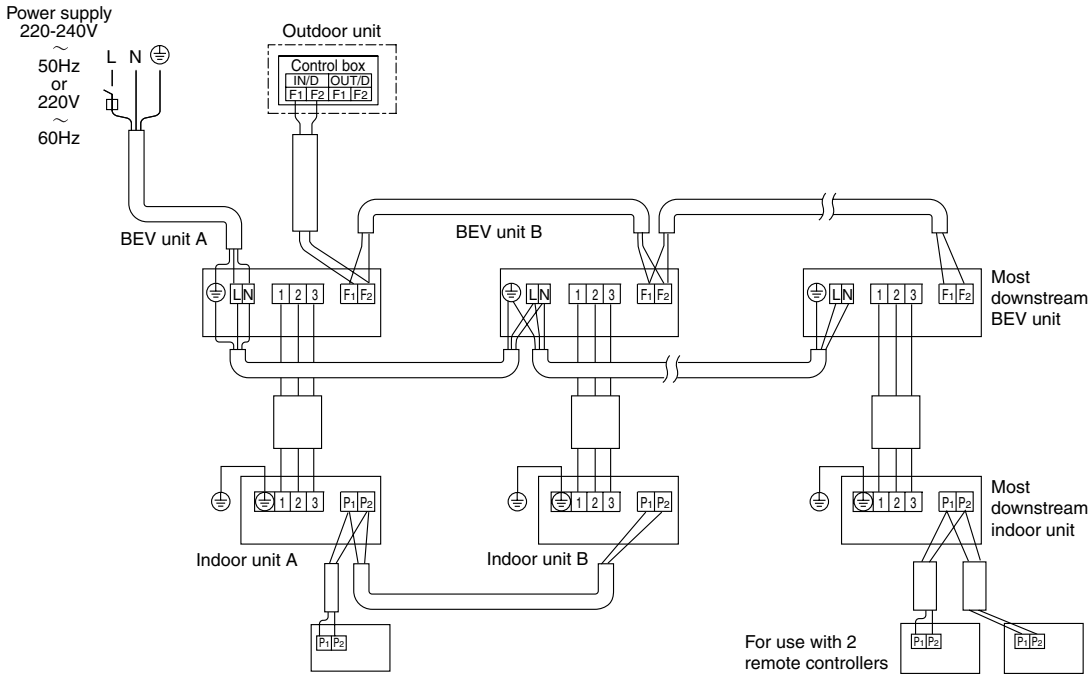

Fig. 19

11

3. When including BS unit

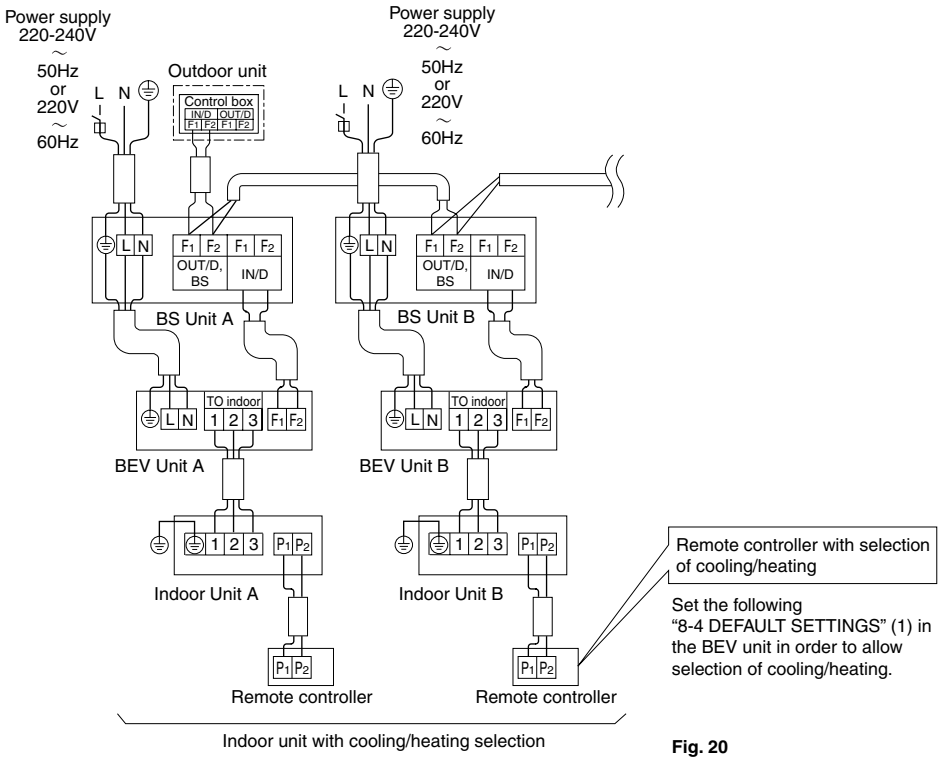

Fig. 20

4. DEFAULT SETTINGS

1. Once piping work is completed, conduct the following settings as needed.

(1) When connecting the BEV unit to the BS unit in the heating/cooling free system, turn the SS1 on the A1P to M (Main) for only one of the BEV units connected to the remote controller on which heating/cooling switching is made possible. **(Refer to Fig. 21)**

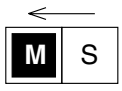

Fig. 21

(2) For BEV unit-only systems
The Cool/Heat SELECTOR is needed.
Refer to the installation manual included with the Cool/Heat SELECTOR for details on how to set it.

2. Once all piping work is done, screw the control box lid shut using the mounting screws.

11. Accessories

Standard Accessories (Indoor Unit)

Check the following accessories are included with the unit.

Name	1) Drain hose	2) Metal Clamp	3) Washer for looking hanger	4) Clamp	5) Wahers fixing plate
Quantity	1 pc.	1 pc.	8 pcs.	6 pcs.	4 pcs.
Shape					

Name	Insulation for fitting	Sealing pad	10) Elbow	11) Paper pattern for installation	12) Blocking pad
Quantity	1 each	2 pcs.	1 pc.	1 pc.	2 pcs.
Shape	6) For gas pipe  7) For liquid pipe	8) Large 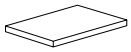 9) Small 		Also used as packing material 	

Name	13) Retainer for blocking pad	14) Retainer for blocking pad	15) Center retainer for blocking pad	(Other) • Operation manual • Installation manual
Quantity	2 pcs.	2 pcs.	2 pcs.	
Shape			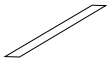	

(V2331)

Standard Accessories (Connecting Unit)

Check if the following accessories are included with your unit.

Name	Clamp	Insulation for fitting	Sealing pad	(7) Gas piping connection piping
Quantity	9 pcs.	3 pcs.	3 pcs.	1 pc.
Shape	(1) 3 short pieces 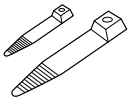 (2) 6 long pieces	(3) For liquid piping × 2 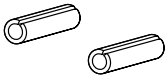 (4) For gas piping × 1 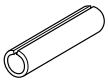	(5)  Small × 2 (6) 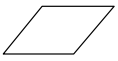 × 1	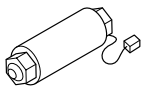

Name	(8) Installation manual	(9) Nameplate
Quantity	1 pc.	1 pc.
Shape		

Optional Accessories (For Indoor Unit)

No.	Item \ Type	FXUQ71MAV1	FXUQ100MAV1	FXUQ125MAV1
1	Sealing Member of Air Discharge Outlet	KDBHJ49F80	KDBHJ49F140	
2	Decoration Panel for Air Discharge	KDBTJ49F80	KDBTJ49F140	
3	Vertical Flap Kit	KDGJ49F80	KDGJ49F140	
4	Replacement Long Life Filter	KAFJ495F140		
5	L Connection Piping Kit	KHFP49M140		

C: 3D045452A

Optional Accessories (For Controls) Refer to P.375

Sealing Member of Air Discharge Outlet – KDBHJ49F80 · 140

Dimension

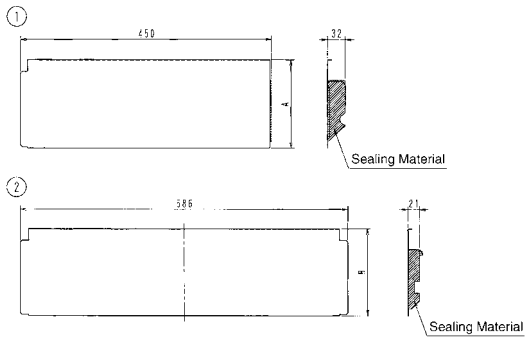

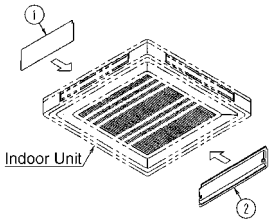

Model	A	B
KDBHJ49F80	100	100
KDBHJ49F140	155	155

Model	Material
KDBHJ49F80	Galvanized Steel Plate
KDBHJ49F140	(with Flocking)

Decoration Panel for Air Discharge – KDBTJ49F80 · 140

Dimension

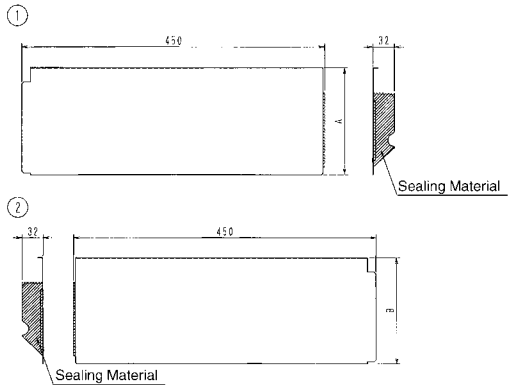

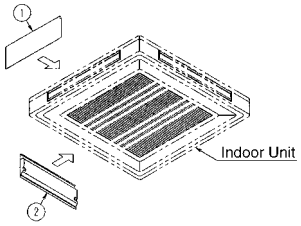

Model	A	B
KDBTJ49F80	100	100
KDBTJ49F140	155	155

Model	Material
KDBTJ49F80	Galvanized Steel Plate
KDBTJ49F140	(with Flocking)

Vertical Flap Kit – KDGJ49F80 · 140

Dimension

KDGJ49F80

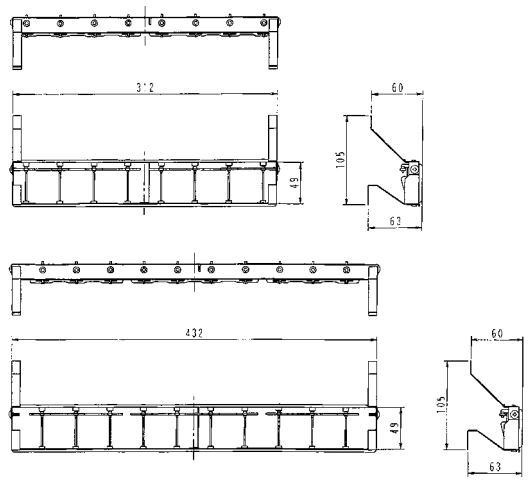

KDGJ49F140

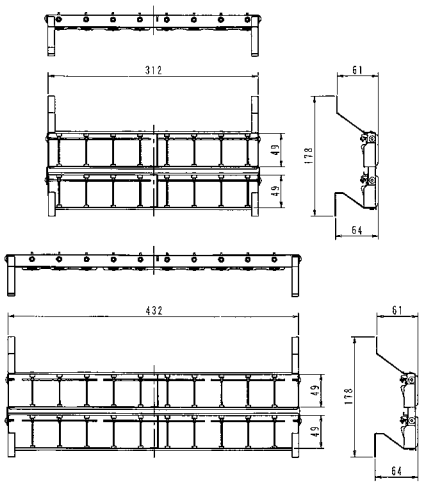

Model	Packing Quantity
KDGJ49F80	4(each 2×2)
KDGJ49F140	

Replacement Long Life Filter – KAFJ495F140

Dimension

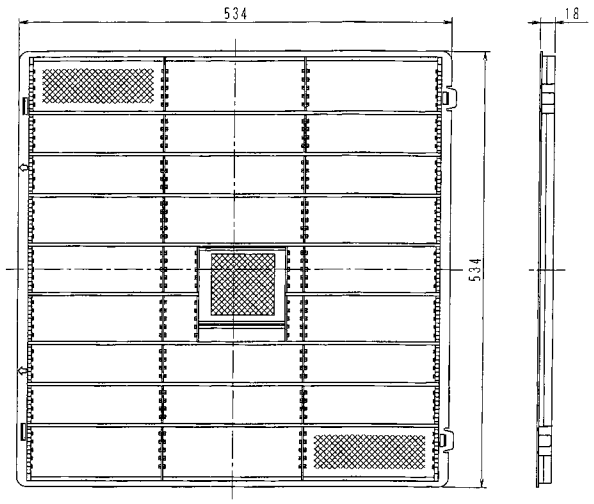

Item \ Model	KAFJ495F140
Initial Pressure Loss (Pa)	Less Than 7
Final Pressure Loss (Pa)	Less Than 49
Average Efficiency (%)	50 (Gravity Method)
Life Time (h)	2,500 (Dust Particle Concentration at 0.15mg/m^3)
Filter Pass Air Flow Rate	18.5m^3/min
Materials	Mildew Proof Resin Net
Number Required Per Model	1
Weight (kg)	0.4

L Connection Piping Kit – KHFP49M140

Dimension

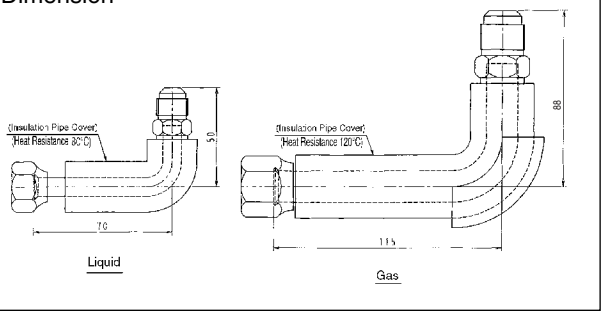

Model	Liquid Side	Gas Side
KHFP49M140	ϕ9.5	ϕ15.9

Installation Box for Adaptor PCB – KRP1B97

Dimension

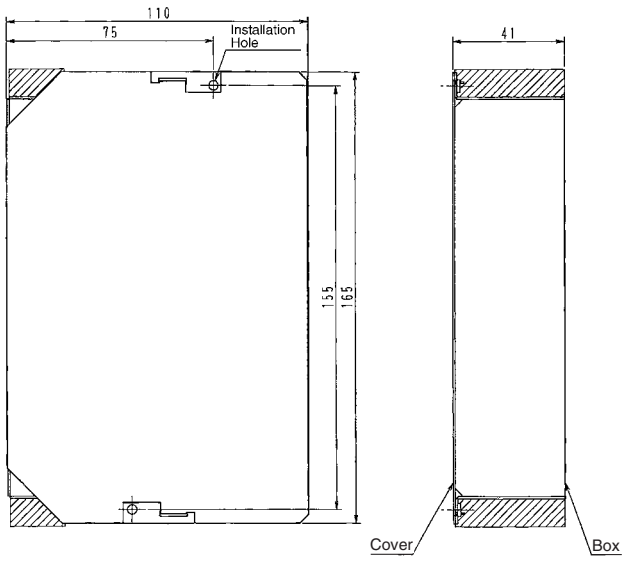

Item \ Model No.	KRP1B97
Adaptor for Wiring	KRP4A53

11

Part 3
Outdoor Units

RX(Y)MQ-P
Heat Pump (50/60Hz)
Cooling Only (50/60Hz) 325

RX(Y)MQ-P
Heat Pump (50/60Hz)
Cooling Only (50/60Hz)

1. Specifications 326
   1.1 Heat Pump 50/60Hz <RXYMQ-PVE> 326
   1.2 Cooling Only 50/60Hz <RXMQ-PVE> 328
2. Dimensions 330
3. Service Space 332
4. Piping Diagrams 334
5. Wiring Diagrams 335
   5.1 Heat Pump 335
   5.2 Cooling Only 336
6. Field Wiring 337
7. Electric Characteristics 338
8. Capacity Tables 339
   8.1 Cooling Capacity 339
   8.2 Heating Capacity 342
   8.3 Capacity Correction Factor 348
   8.4 Notes for Heating Capacity Characteristics 350
9. Operation Limits 351
   9.1 Heat Pump 351
   9.2 Cooling Only 352
10. Sound Levels 353
11. Accessories 354
   11.1 Outdoor Units 354

12

1. Specifications

1.1 Heat Pump 50/60Hz <RXYMQ-PVE>

Model Name			RXYMQ4PVE	RXYMQ5PVE
∗1 Cooling Capacity		kcal / h	9,600	12,000
		Btu / h	38,200	47,800
		kW	11.2	14.0
∗2 Heating Capacity		kcal / h	10,800	13,800
		Btu / h	42,700	54,600
		kW	12.5	16.0
Casing Color			Ivory White	Ivory White
Dimensions: (H×W×D)		mm	1,345×900×320	1,345×900×320
Heat Exchanger			Cross Fin Coil	Cross Fin Coil
Comp.	Type		Hermetically Sealed Scroll Type	Hermetically Sealed Scroll Type
	Piston Displacement	m³/h	19.36	19.36
	Number of Revolutions	r.p.m	6,480	6,480
	Motor Output×Number of Units	kW	2.5×1	3.0×1
	Starting Method		Direct on line	Direct on line
Fan	Type		Propeller Fan	Propeller Fan
	Motor Output	W	70×2	70×2
	Air Flow Rate	m³/min	106	106
	Drive		Direct Drive	Direct Drive
Connecting Pipes	Liquid Pipe	mm	ϕ9.5 (Flare Connection)	ϕ9.5 (Flare Connection)
	Gas Pipe	mm	ϕ15.9 (Flare Connection)	ϕ15.9 (Flare Connection)
Machine Weight		kg	125	125
Safety Devices			High Pressure Switch, Fan Driver Overload Protector, Inverter Overload Protector, Fusible Plugs, Fuse	High Pressure Switch, Fan Driver Overload Protector, Inverter Overload Protector, Fusible Plugs, Fuse
Defrost Method			Reverse cycle defrosting	Reverse cycle defrosting
Capacity Control		%	24~100	24~100
Refrigerant	Refrigerant Name		R-410A	R-410A
	Charge	kg	4.0	4.0
	Control		Electronic Expansion Valve	Electronic Expansion Valve
Refrigerator Oil			DAPHNE FVC68D	DAPHNE FVC68D
	Charge Volume	L	1.5	1.5
Standard Accessories			Installation Manual, Operation Manual, Clamps	Installation Manual, Operation Manual, Clamps
Drawing No.			C: 4D052608	

Notes:

∗1 Indoor temp. : 27°CDB, 19°CWB / outdoor temp. : 35°CDB / Equivalent piping length : 7.5m, level difference : 0m.
∗2 Indoor temp. : 20°CDB / outdoor temp. : 7°CDB, 6°CWB / Equivalent piping length : 7.5m, level difference : 0m.
3 The power input (PI) (Comp. + Outdoor Fan Motor) : Refer to P.339~.

Conversion Formulae
kcal/h=kW×860 Btu/h=kW×3412 cfm=m³/min×35.3

Model Name			RXYMQ6PVE
∗1 Cooling Capacity		kcal / h	13,300
		Btu / h	52,900
		kW	15.5
∗2 Heating Capacity		kcal / h	15,500
		Btu / h	61,400
		kW	18.0
Casing Color			Ivory White
Dimensions: (H×W×D)		mm	1,345×900×320
Heat Exchanger			Cross Fin Coil
Comp.	Type		Hermetically Sealed Scroll Type
	Piston Displacement	m^3/h	19.36
	Number of Revolutions	r.p.m	6,480
	Motor Output×Number of Units	kW	3.5×1
	Starting Method		Direct on line
Fan	Type		Propeller Fan
	Motor Output	W	70×2
	Air Flow Rate	m^3/min	106
	Drive		Direct Drive
Connecting Pipes	Liquid Pipe	mm	ϕ9.5 (Flare Connection)
	Gas Pipe	mm	ϕ19.1 (Brazing Connection)
Machine Weight		kg	125
Safety Devices			High Pressure Switch, Fan Driver Overload Protector, Inverter Overload Protector, Fusible Plugs, Fuse
Defrost Method			Reverse cycle defrosting
Capacity Control		%	24~100
Refrigerant	Refrigerant Name		R-410A
	Charge	kg	4.0
	Control		Electronic Expansion Valve
Refrigerator Oil			DAPHNE FVC68D
	Charge Volume	L	1.5
Standard Accessories			Installation Manual, Operation Manual, Clamps, Auxiliary Piping
Drawing No.			C: 4D052608

Notes:

∗1 Indoor temp. : 27°CDB, 19°CWB / outdoor temp. : 35°CDB / Equivalent piping length : 7.5m, level difference : 0m.
∗2 Indoor temp. : 20°CDB / outdoor temp. : 7°CDB, 6°CWB / Equivalent piping length : 7.5m, level difference : 0m.
3 The power input (PI) (Comp. + Outdoor Fan Motor) : Refer to P.339~.

Conversion Formulae
kcal/h=kW×860 Btu/h=kW×3412 cfm=m^3/min×35.3

1.2 Cooling Only 50/60Hz <RXMQ-PVE>

Model Name			RXMQ4PVE	RXMQ5PVE
∗1 Cooling Capacity		kcal / h	9,600	12,000
		Btu / h	38,200	47,800
		kW	11.2	14.0
Casing Color			Ivory White	Ivory White
Dimensions: (H×W×D)		mm	1,345×900×320	1,345×900×320
Heat Exchanger			Cross Fin Coil	Cross Fin Coil
Comp.	Type		Hermetically Sealed Scroll Type	Hermetically Sealed Scroll Type
	Piston Displacement	m^3/h	19.36	19.36
	Number of Revolutions	r.p.m	6,480	6,480
	Motor Output×Number of Units	kW	2.5×1	3.0×1
	Starting Method		Direct on line	Direct on line
Fan	Type		Propeller Fan	Propeller Fan
	Motor Output	W	70×2	70×2
	Air Flow Rate	m^3/min	106	106
	Drive		Direct Drive	Direct Drive
Connecting Pipes	Liquid Pipe	mm	ϕ9.5 (Flare Connection)	ϕ9.5 (Flare Connection)
	Gas Pipe	mm	ϕ15.9 (Flare Connection)	ϕ15.9 (Flare Connection)
Machine Weight		kg	125	125
Safety Devices			High Pressure Switch, Fan Driver Overload Protector, Inverter Overload Protector, Fusible Plugs, Fuse	High Pressure Switch, Fan Driver Overload Protector, Inverter Overload Protector, Fusible Plugs, Fuse
Defrost Method			Reverse cycle defrosting	Reverse cycle defrosting
Capacity Control		%	24~100	24~100
Refrigerant	Refrigerant Name		R-410A	R-410A
	Charge	kg	4.0	4.0
	Control		Electronic Expansion Valve	Electronic Expansion Valve
Refrigerator Oil			DAPHNE FVC68D	DAPHNE FVC68D
	Charge Volume	L	1.5	1.5
Standard Accessories			Installation Manual, Operation Manual, Clamps	Installation Manual, Operation Manual, Clamps
Drawing No.			C: 4D052613	

Notes:

∗1 Indoor temp. : 27°CDB, 19°CWB / outdoor temp. : 35°CDB / Equivalent piping length : 7.5m, level difference : 0m.

2 The power input (PI) (Comp. + Outdoor Fan Motor) : Refer to P.339~.

Conversion Formulae
kcal/h=kW×860 Btu/h=kW×3412 cfm=m^3/min×35.3

Model Name			RXMQ6PVE
∗1 Cooling Capacity		kcal / h	13,300
		Btu / h	52,900
		kW	15.5
Casing Color			Ivory White
Dimensions: (H×W×D)		mm	1,345×900×320
Heat Exchanger			Cross Fin Coil
Comp.	Type		Hermetically Sealed Scroll Type
	Piston Displacement	m^3/h	19.36
	Number of Revolutions	r.p.m	6,480
	Motor Output×Number of Units	kW	3.5×1
	Starting Method		Direct on line
Fan	Type		Propeller Fan
	Motor Output	W	70×2
	Air Flow Rate	m^3/min	106
	Drive		Direct Drive
Connecting Pipes	Liquid Pipe	mm	ϕ9.5 (Flare Connection)
	Gas Pipe	mm	ϕ19.1 (Brazing Connection)
Machine Weight		kg	125
Safety Devices			High Pressure Switch, Fan Driver Overload Protector, Inverter Overload Protector, Fusible Plugs, Fuse
Defrost Method			Reverse cycle defrosting
Capacity Control		%	24~100
Refrigerant	Refrigerant Name		R-410A
	Charge	kg	4.0
	Control		Electronic Expansion Valve
Refrigerator Oil			DAPHNE FVC68D
	Charge Volume	L	1.5
Standard Accessories			Installation Manual, Operation Manual, Clamps, Auxiliary Piping
Drawing No.			C: 4D052613

Notes:

∗1 Indoor temp. : 27°CDB, 19°CWB / outdoor temp. : 35°CDB / Equivalent piping length : 7.5m, level difference : 0m.
2 The power input (PI) (Comp. + Outdoor Fan Motor) : Refer to P.339~.

Conversion Formulae
kcal/h=kW×860 Btu/h=kW×3412 cfm=m^3/min×35.3

12

2. Dimensions

RX(Y)MQ4 · 5PVE

Unit: mm

3D052615

NO.	Parts name	Remarks
8	Drain pipe connection	Outside Diameter ϕ26
7	Control wiring intake	ϕ27 knock hole
6	Power supply wiring intake	ϕ34 knock hole
5	Refrigerant piping intake	
4	Grounding terminal	In switch box (M5)
3	Service port	In the unit
2	Liquid pipe connection	ϕ9.5 Flare
1	Gas pipe connection	ϕ15.9Flare

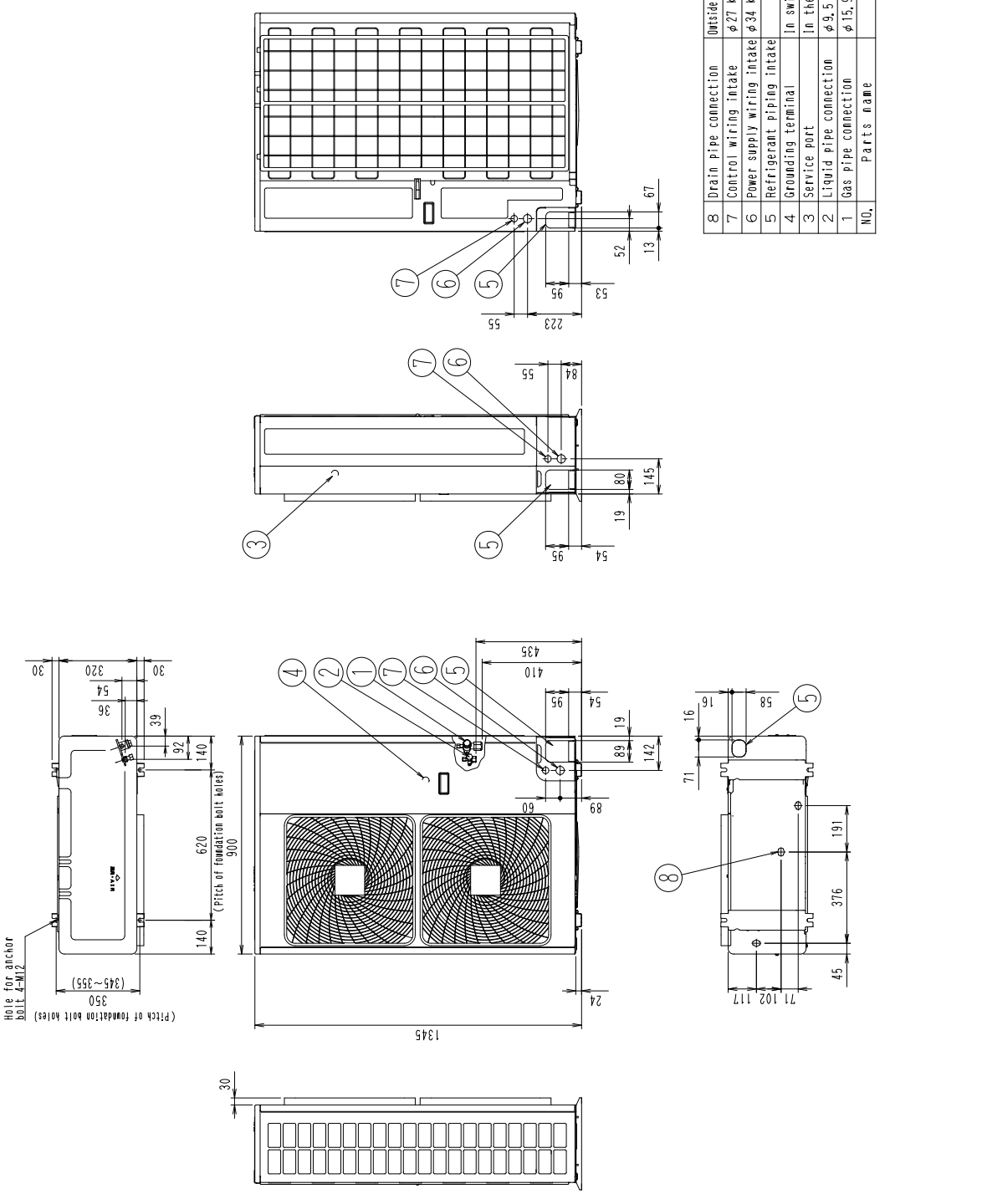

RX(Y)MQ6PVE

Unit: mm

3D052616

NO.	Parts name	Remarks
8	Drain pipe connection	Outside Diameter φ26
7	Control wiring intake	φ27 knock hole
6	Power supply wiring intake	φ34 knock hole
5	Refrigerant piping intake	
4	Grounding terminal	In switch box (M5)
3	Service port	In the unit
2	Liquid pipe connection	φ9.5 Flare
1	Gas pipe connection	φ19.1 Brazing

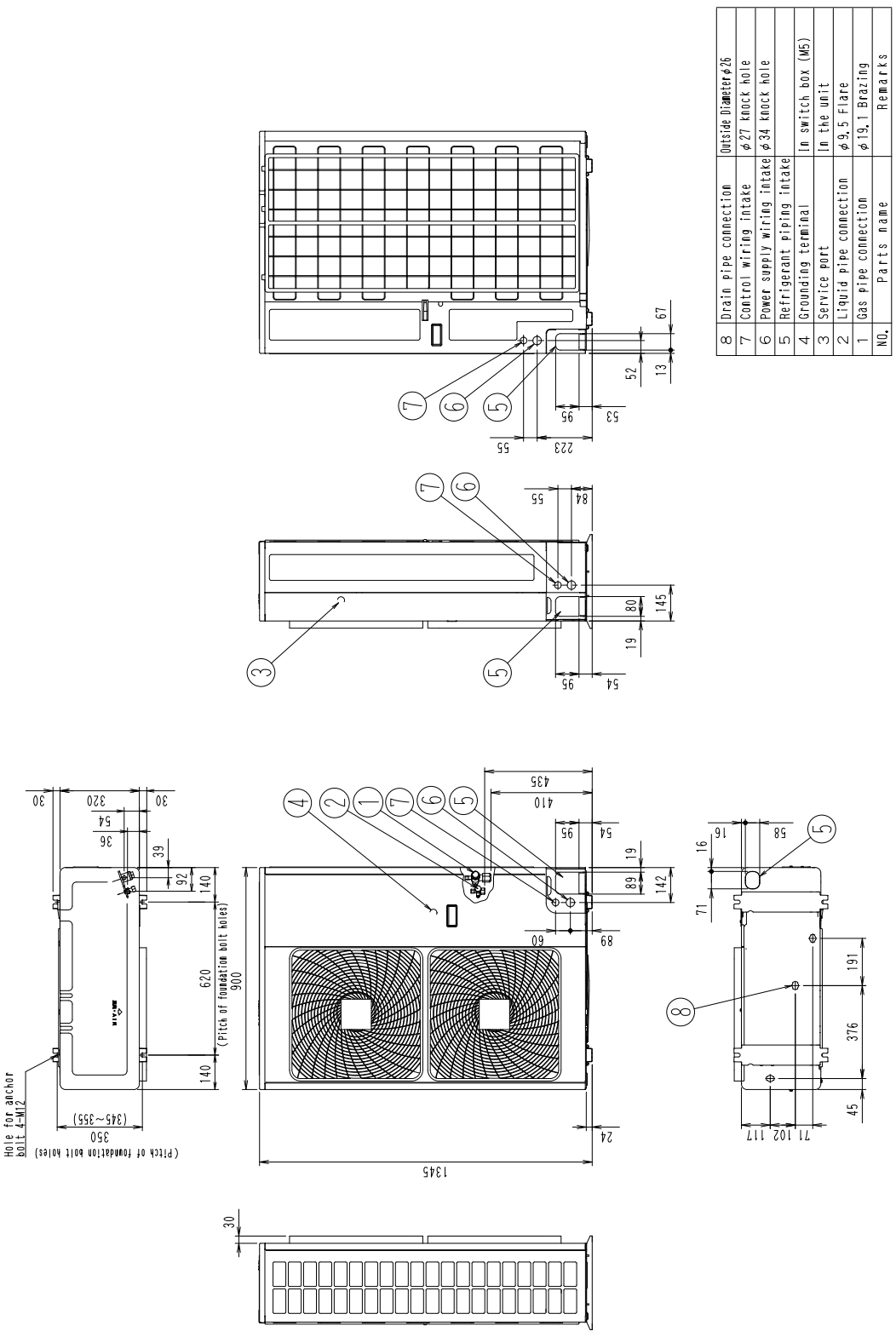

12

3. Service Space

RX(Y)MQ4 · 5 · 6PVE

REQUIRED INSTALLATION SPACE
The unit of the values is mm.

1. Where there is an obstacle on the suction side :

(a) No obstacle above

(1) Stand-alone installation

· Obstacle on the suction side only

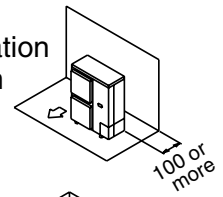

· Obstacle on both sides

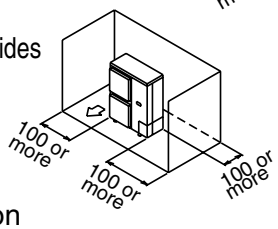

(2) Series installation (2 or more)

· Obstacle on both sides

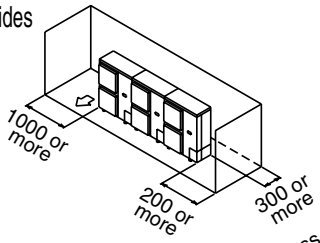

(b) Obstacle above, too

(1) Stand-alone installation

· Obstacle on the suction side, too

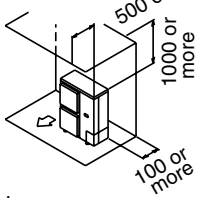

· Obstacle on the suction side and both sides

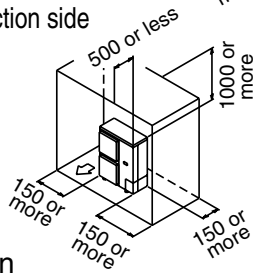

(2) Series installation (2 or more)

· Obstacle on the suction side and both sides

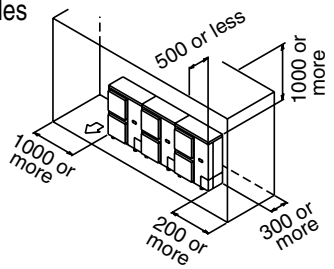

2. Where there is an obstacle on the discharge side :

(a) No obstacle above

(1) Stand-alone installation

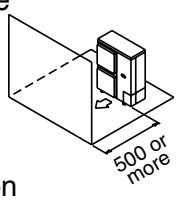

(2) Series installation (2 or more)

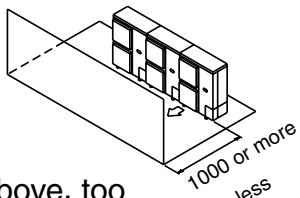

(b) Obstacle above, too

(1) Stand-alone installation

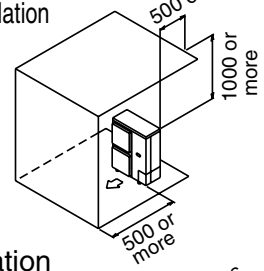

(2) Series installation (2 or more)

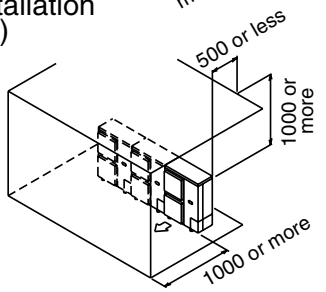

3. Where the reare obstacles on both suction and discharge sides :

Pattern 1

Where the obstacles on the discharge side is higher than the unit :

(There is no height limit for obstructions on the intake side.)

(a) No obstacle above

(1) Stand-alone installation

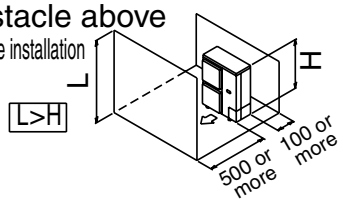

(2) Series installation (2 or more)

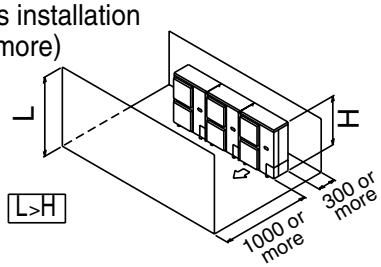

3D045696B

(b) Obstacle above, too

(1) Stand-alone installation

The relations between H, A and L are as follows :

	L	A
L≤H	0<L≤1/2H	750
	1/2H<L≤H	1000
H<L	Set the stand as : L≤H.	

Close the bottom of the installation frame to prevent the discharged air from being bypassed.

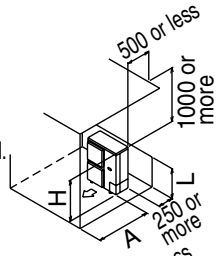

(2) Series installation (2 or more)

The relations between H, A and L are as follows :

	L	A
L≤H	0<L≤1/2H	1000
	1/2H<L≤H	1250
H<L	Set the stand as : L≤H.	

Close the bottom of the installation frame to prevent the discharged air from being bypassed.

Only two units can be installed for this series.

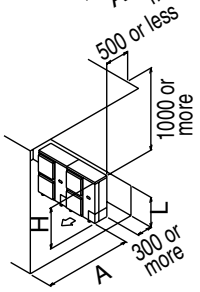

Pattern 2

Where the obstacles on the discharge side is lower than the unit :

(There is no height limit for obstructions on the intake side.)

(a) No obstacle above

(1) Stand-alone installation

L≤H

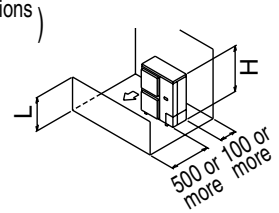

(2) Series installation (2 or more)

The relations between H, A and L are as follows :

L	A
0<L≤1/2H	250
1/2H<L≤H	300

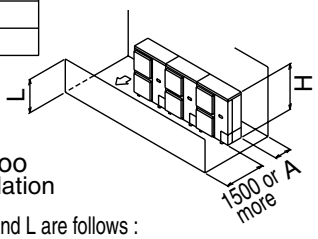

(b) Obstacle above, too

(1) Stand-alone installation

The relations between H, A and L are follows :

	L	A
L≤H	0<L≤1/2H	100
	1/2H<L≤H	200
H<L	Set the stand as : L≤H.	

Close the bottom of the installation frame to prevent the discharged air from being bypassed.

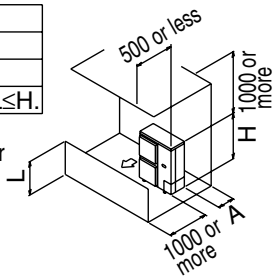

(2) Series installation

The relations between H, A and L are as follows :

	L	A
L≤H	0<L≤1/2H	250
	1/2H<L≤H	300
H<L	Set the stand as : L≤H.	

Close the bottom of the installation frame to prevent the discharged air from being bypassed.

Only two units can be installed for this series.

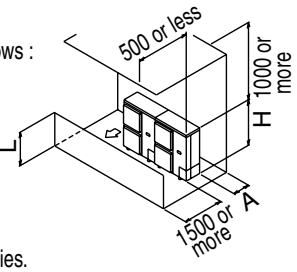

4. Double-decker installation

(a) Obstacle on the discharge side

Close the gap A (the gap between the upper and lower outdoor units) to prevent the discharged air from being bypassed.

Do not stack more than two unit.

(b) Obstacle on the suction side

Close the gap A (the gap between the upper and lower outdoor units) to prevent the discharged air from being bypassed.

Do not stack more than two unit.

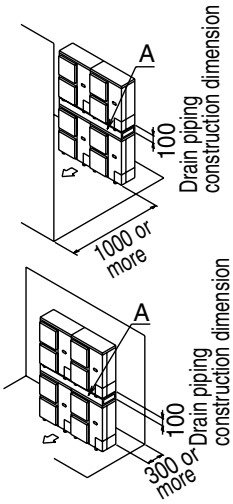

5. Multiple rows of series installation (on the rooftop, etc.)

(a) One row of stand-alone Installation

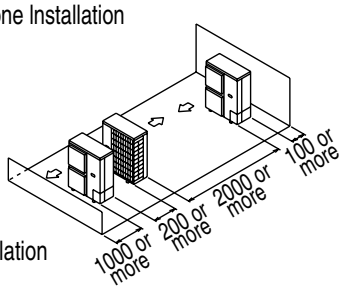

(b) Rows of series installation (2 or more)

The relations between H, A and L are as follows :

	L	A
L≤H	0<L≤1/2H	250
	1/2H<L≤H	300
H<L	Cannot be installed.	

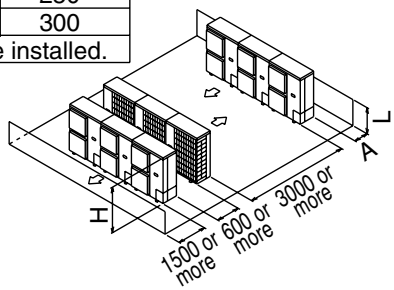

3D045696B

12

4. Piping Diagrams

RX(Y)MQ4 · 5 · 6PVE

3D052628

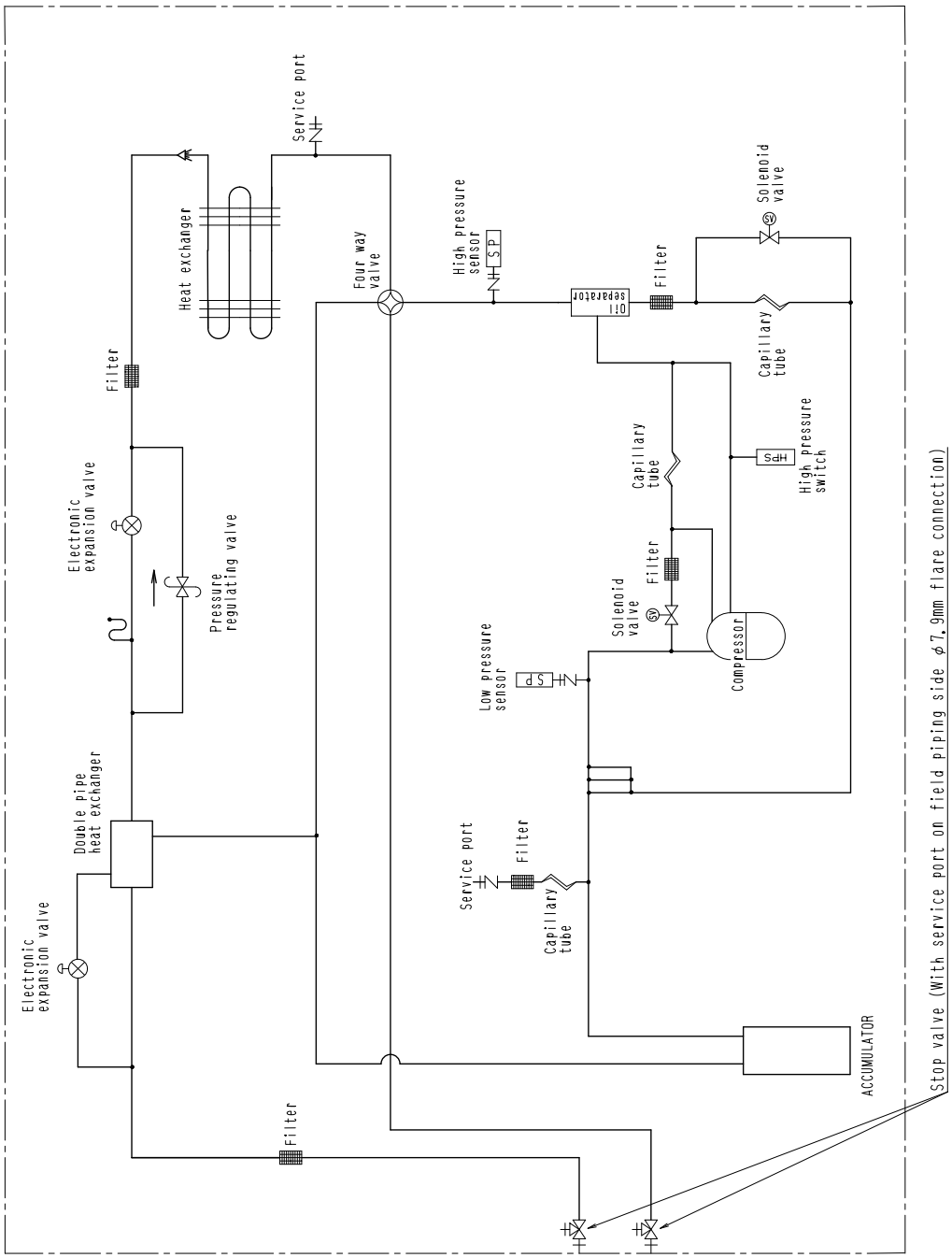

5. Wiring Diagrams

5.1 Heat Pump

RXYMQ4 · 5 · 6PVE

3D051730B

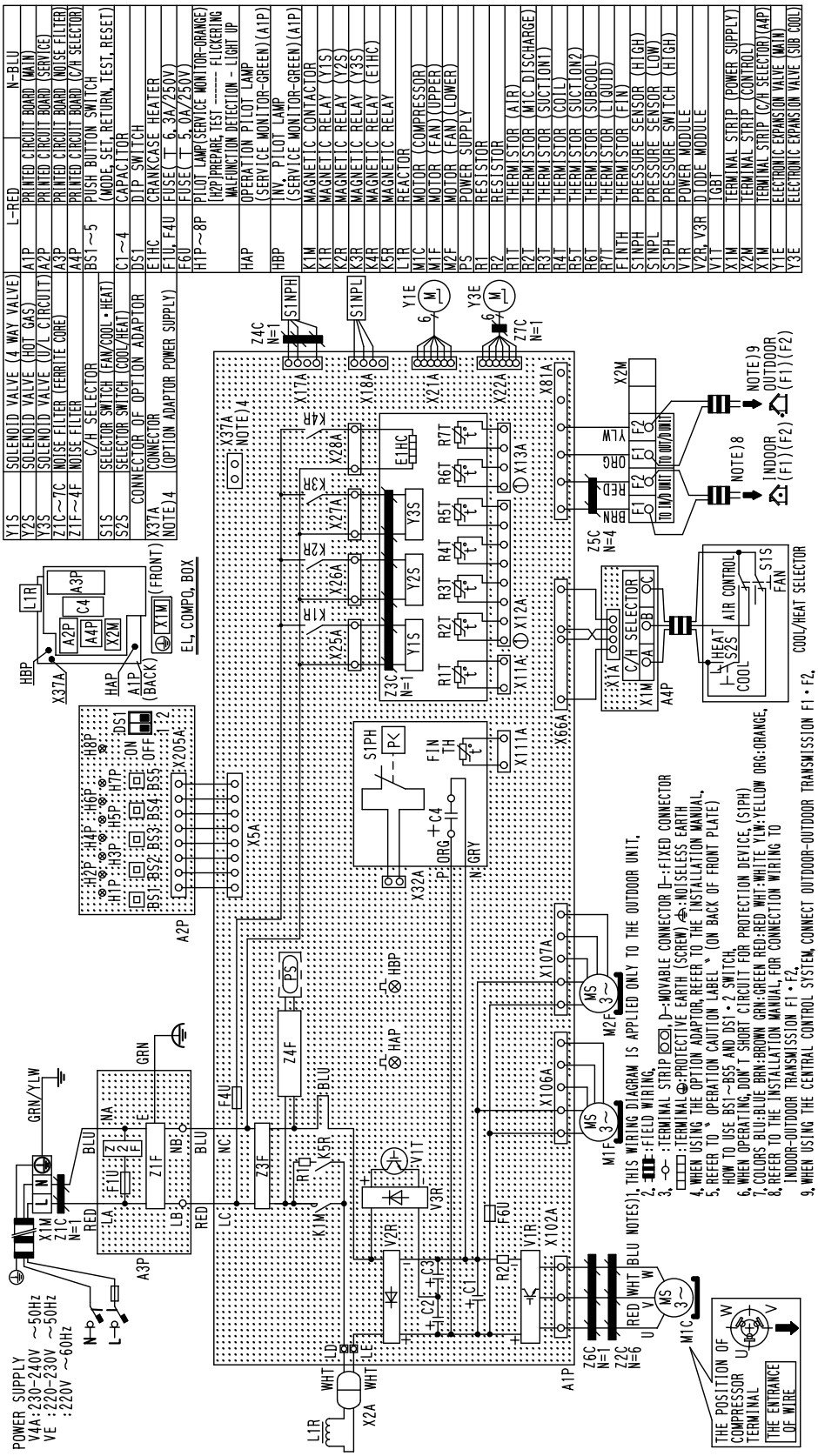

5.2 Cooling Only

RXMQ4 · 5 · 6PVE

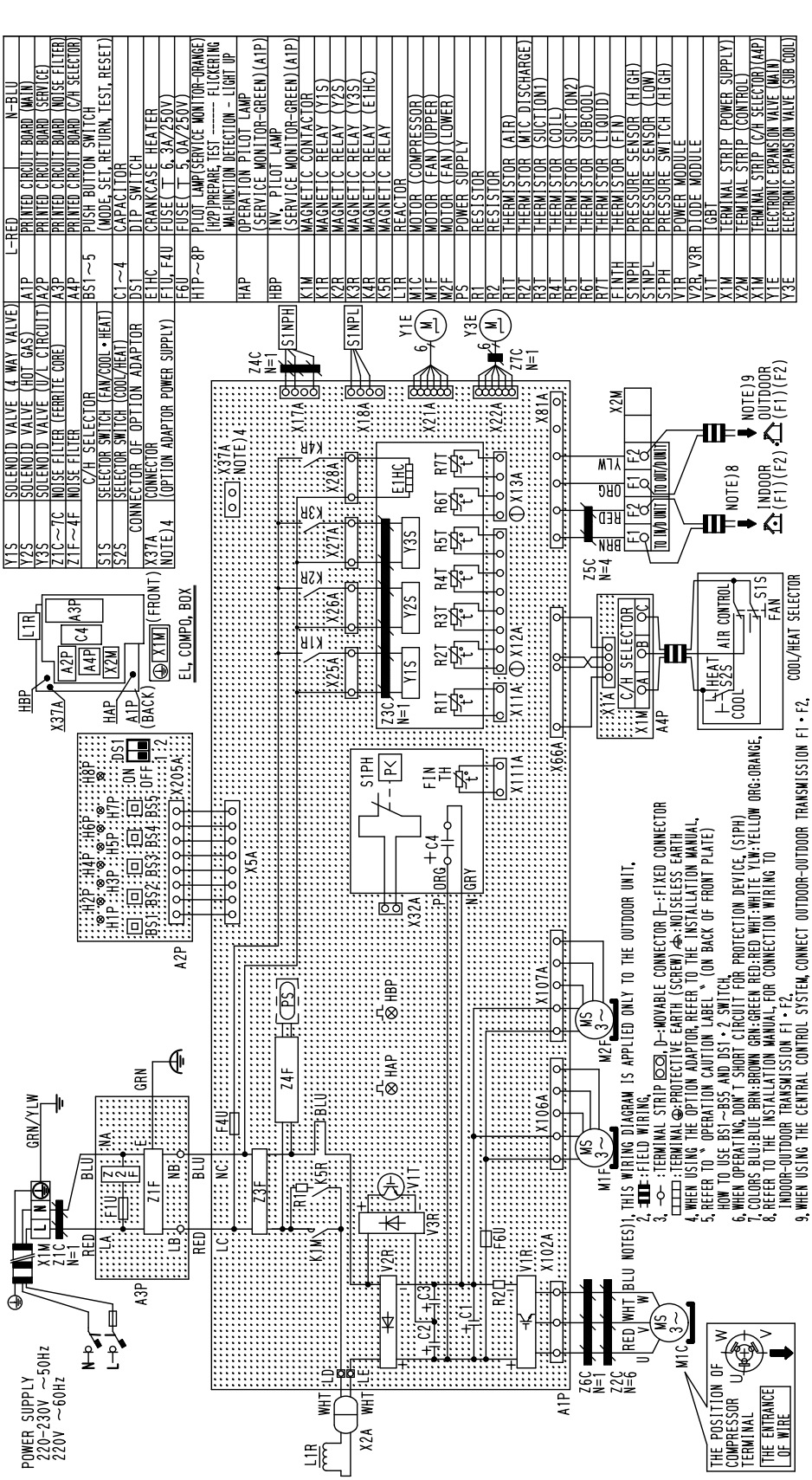

6. Field Wiring

RX(Y)MQ4 · 5 · 6PVE

3D052597

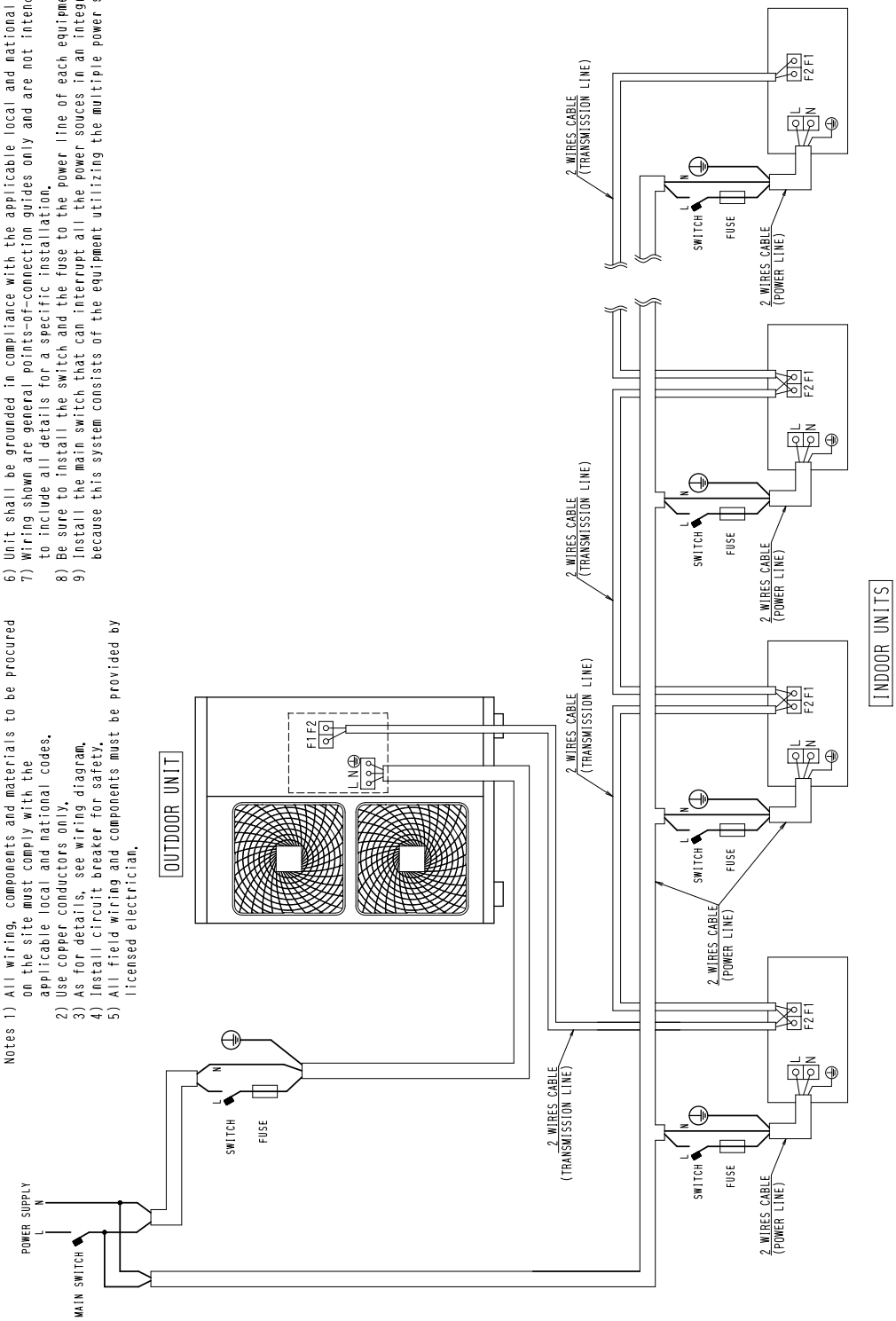

7. Electric Characteristics

RX(Y)MQ4 · 5 · 6PVE

Model		Units				Power supply			Comp.		OFM	
Outdoor	H/P C/O	Hz	Volts	Min.	Max.	MCA	TOCA	MFA	MSC	RLA	KW	FLA
RXYMQ4PVE	H/P	50	220	198	253	27.0	27.0	30	16.7	16.7	0.070 + 0.070	0.3 + 0.3
			230						16.0	16.0		
		60	220		242				16.7	16.7		
RXYMQ5PVE	H/P	50	220	198	253	27.0	27.0	30	20.6	20.6	0.070 + 0.070	0.3 + 0.3
			230						19.7	19.7		
		60	220		242				20.6	20.6		
RXYMQ6PVE	H/P	50	220	198	253	27.0	27.0	30	24.0	24.0	0.070 + 0.070	0.3 + 0.3
			230						22.9	22.9		
		60	220		242				24.0	24.0		
RXMQ4PVE	C/O	50	220	198	253	27.0	27.0	30	15.1	15.1	0.070 + 0.070	0.3 + 0.3
			230						14.4	14.4		
		60	220		242				15.1	15.1		
RXMQ5PVE	C/O	50	220	198	253	27.0	27.0	30	19.8	19.8	0.070 + 0.070	0.3 + 0.3
			230						18.9	18.9		
		60	220		242				19.8	19.8		
RXMQ6PVE	C/O	50	220	198	253	27.0	27.0	30	21.4	21.4	0.070 + 0.070	0.3 + 0.3
			230						22.9	22.9		
		60	220		242				21.4	21.4		

The relationship between the starting time and the starting current.

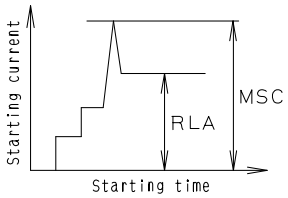

Notes:

1. RLA is based on the following conditions.
   Cooling
   Indoor temp. 27°C DB/19.0°C WB
   Outdoor temp. 35°C DB
   Heating
   Indoor temp. 20°C DB
   Outdoor temp. 7.0°C DB/6.0°C WB
2. TOCA means the total value of each OC set.
3. Voltage range.
   Units are suitable for use on electrical systems where voltage supplied to unit terminal is not below or above listed range limits.
4. Maximum allowable voltage variation between phases is 2%.
5. MCA represents maximum input current.
   MFA represents capacity which may accept MCA.
6. Select wire size based on the larger value of MCA or TOCA.
7. MFA is used to select the circuit breaker and the ground fault circuit interrupter (earth leakage circuit breaker).

Symbols:

MCA :Min. Circuit Amps. (A)
TOCA :Total Over-current Amps. (A)
MFA :Max. Fuse Amps(See note7). (A)
MSC :Max. current during the Starting compressor. (A)
RLA :Rated Load Amps. (A)
OFM :Outdoor Fan Motor. (A)
FLA :Full Load Amps. (A)
kW :Fan Motor Rated Output. (kW)

C:3D052771

8. Capacity Tables

8.1 Cooling Capacity

RX(Y)MQ4PVE [50/60Hz]

Cooling capacity

Combination ratio(%) (Capacity index)	Outdoor air temp.	INDOOR AIR TEMP. -°C																					
		14.0			16.0			18.0			19.0			20.0			22.0			24.0			
	°CDB	TC	PI		TC	PI		TC	PI		TC	PI		TC	PI		TC	PI		TC	PI	
		kW	kW		kW	kW		kW	kW		kW	kW		kW	kW		kW	kW		kW	kW	
130	10.0	9.83	1.36		11.7	1.66		13.6	1.98		14.6	2.14		15.5	2.30		16.9	2.27				
	12.0	9.83	1.38		11.7	1.69		13.6	2.02		14.6	2.18		15.5	2.34		16.7	2.33				
	14.0	9.83	1.41		11.7	1.73		13.6	2.05		14.6	2.22		15.5	2.38		16.5	2.46				
	16.0	9.83	1.44		11.7	1.76		13.6	2.09		14.6	2.29		15.5	2.53		16.3	2.59				
	18.0	9.83	1.46		11.7	1.80		13.6	2.23		14.6	2.47		15.4	2.68		16.1	2.72				
	20.0	9.83	1.49		11.7	1.91		13.6	2.40		14.6	2.66		15.2	2.81		15.9	2.86				
	21.0	9.83	1.54		11.7	1.98		13.6	2.48		14.6	2.76		15.0	2.89		15.8	2.92				
	23.0	9.83	1.64		11.7	2.12		13.6	2.67		14.6	2.96		14.8	3.01		15.5	3.06				
	25.0	9.83	1.76		11.7	2.27		13.6	2.86		14.4	3.13		14.6	3.14		15.3	3.19				
	27.0	9.83	1.88		11.7	2.43		13.6	3.06		14.2	3.26		14.4	3.27		15.1	3.33				
	29.0	9.83	2.00		11.7	2.60		13.6	3.27		14.0	3.39		14.2	3.40		14.9	3.46				
	31.0	9.83	2.14		11.7	2.78		13.6	3.50		13.8	3.52		14.0	3.54		14.7	3.60				
	33.0	9.83	2.28		11.7	2.96		13.4	3.64		13.6	3.65		13.8	3.67		14.5	3.73				
	35.0	9.83	2.43		11.7	3.16		13.2	3.77		13.4	3.79		13.6	3.80		14.3	3.87				
	37.0	9.83	2.59		11.7	3.37		13.0	3.90		13.2	3.92		13.4	3.94		14.0	4.01				
	39.0	9.83	2.75		11.7	3.59		12.8	4.03		13.0	4.05		13.1	4.07		13.8	4.15				
120	10.0	9.07	1.24		10.8	1.52		12.6	1.80		13.4	1.95		14.3	2.10		16.1	2.36				
	12.0	9.07	1.26		10.8	1.54		12.6	1.84		13.4	1.99		14.3	2.14		16.1	2.43		16.4	2.34	
	14.0	9.07	1.29		10.8	1.57		12.6	1.87		13.4	2.02		14.3	2.18		15.9	2.43		16.2	2.44	
	16.0	9.07	1.31		10.8	1.60		12.6	1.91		13.4	2.06		14.3	2.23		15.7	2.56		16.0	2.58	
	18.0	9.07	1.34		10.8	1.64		12.6	1.97		13.4	2.19		14.3	2.41		15.5	2.69		15.8	2.71	
	20.0	9.07	1.36		10.8	1.70		12.6	2.12		13.4	2.35		14.3	2.59		15.3	2.82		15.6	2.84	
	21.0	9.07	1.38		10.8	1.76		12.6	2.20		13.4	2.44		14.3	2.68		15.1	2.88		15.5	2.91	
	23.0	9.07	1.47		10.8	1.89		12.6	2.36		13.4	2.61		14.3	2.88		14.9	3.02		15.3	3.04	
	25.0	9.07	1.57		10.8	2.02		12.6	2.53		13.4	2.80		14.3	3.09		14.7	3.15		15.1	3.17	
	27.0	9.07	1.68		10.8	2.16		12.6	2.70		13.4	3.00		14.2	3.25		14.5	3.28		14.8	3.30	
	29.0	9.07	1.79		10.8	2.31		12.6	2.89		13.4	3.21		14.0	3.39		14.3	3.41		14.6	3.44	
	31.0	9.07	1.91		10.8	2.46		12.6	3.09		13.4	3.43		13.8	3.52		14.1	3.54		14.4	3.57	
	33.0	9.07	2.03		10.8	2.63		12.6	3.30		13.4	3.63		13.5	3.65		13.9	3.68		14.2	3.71	
	35.0	9.07	2.16		10.8	2.80		12.6	3.52		13.2	3.77		13.3	3.78		13.7	3.81		14.0	3.84	
	37.0	9.07	2.30		10.8	2.98		12.6	3.76		13.0	3.90		13.1	3.91		13.4	3.95		13.8	3.98	
	39.0	9.07	2.45		10.8	3.18		12.6	4.01		12.7	4.03		12.9	4.05		13.2	4.08		13.6	4.12	
110	10.0	8.31	1.13		9.92	1.37		11.5	1.63		12.3	1.76		13.1	1.90		14.7	2.16		16.2	2.43	
	12.0	8.31	1.15		9.92	1.40		11.5	1.66		12.3	1.80		13.1	1.93		14.7	2.21		16.2	2.43	
	14.0	8.31	1.17		9.92	1.42		11.5	1.69		12.3	1.83		13.1	1.97		14.7	2.25		15.9	2.56	
	16.0	8.31	1.19		9.92	1.45		11.5	1.73		12.3	1.87		13.1	2.01		14.7	2.33		15.7	2.66	
	18.0	8.31	1.21		9.92	1.48		11.5	1.76		12.3	1.92		13.1	2.11		14.7	2.52		15.5	2.69	
	20.0	8.31	1.24		9.92	1.51		11.5	1.86		12.3	2.06		13.1	2.27		14.7	2.71		15.3	2.82	
	21.0	8.31	1.25		9.92	1.56		11.5	1.93		12.3	2.13		13.1	2.35		14.7	2.81		15.2	2.89	
	23.0	8.31	1.31		9.92	1.67		11.5	2.07		12.3	2.29		13.1	2.52		14.7	3.00		15.0	3.02	
	25.0	8.31	1.40		9.92	1.78		11.5	2.22		12.3	2.45		13.1	2.70		14.5	3.13		14.8	3.15	
	27.0	8.31	1.49		9.92	1.90		11.5	2.37		12.3	2.62		13.1	2.89		14.3	3.26		14.6	3.28	
	29.0	8.31	1.59		9.92	2.03		11.5	2.53		12.3	2.80		13.1	3.09		14.0	3.39		14.3	3.42	
	31.0	8.31	1.69		9.92	2.17		11.5	2.70		12.3	3.00		13.1	3.30		13.8	3.52		14.1	3.55	
	33.0	8.31	1.80		9.92	2.31		11.5	2.89		12.3	3.20		13.1	3.53		13.6	3.66		13.9	3.68	
	35.0	8.31	1.91		9.92	2.46		11.5	3.08		12.3	3.41		13.1	3.76		13.4	3.79		13.7	3.82	
	37.0	8.31	2.03		9.92	2.62		11.5	3.28		12.3	3.64		12.9	3.89		13.2	3.92		13.5	3.95	
	39.0	8.31	2.16		9.92	2.79		11.5	3.50		12.3	3.88		12.7	4.02		13.0	4.06		13.3	4.09	
100	10.0	7.56	1.02		9.02	1.23		10.5	1.46		11.2	1.58		11.9	1.70		13.4	1.94		14.8	2.18	
	12.0	7.56	1.03		9.02	1.26		10.5	1.49		11.2	1.61		11.9	1.73		13.4	1.98		14.8	2.23	
	14.0	7.56	1.05		9.02	1.28		10.5	1.52		11.2	1.64		11.9	1.76		13.4	2.01		14.8	2.27	
	16.0	7.56	1.07		9.02	1.30		10.5	1.55		11.2	1.67		11.9	1.80		13.4	2.05		14.8	2.36	
	18.0	7.56	1.09		9.02	1.33		10.5	1.58		11.2	1.70		11.9	1.83		13.4	2.17		14.8	2.55	
	20.0	7.56	1.11		9.02	1.35		10.5	1.62		11.2	1.79		11.9	1.96		13.4	2.34		14.8	2.74	
	21.0	7.56	1.12		9.02	1.37		10.5	1.68		11.2	1.85		11.9	2.03		13.4	2.42		14.8	2.84	
	23.0	7.56	1.15		9.02	1.46		10.5	1.80		11.2	1.99		11.9	2.18		13.4	2.60		14.7	3.00	
	25.0	7.56	1.23		9.02	1.56		10.5	1.93		11.2	2.13		11.9	2.33		13.4	2.78		14.5	3.13	
	27.0	7.56	1.31		9.02	1.66		10.5	2.06		11.2	2.27		11.9	2.50		13.4	2.98		14.3	3.26	
	29.0	7.56	1.40		9.02	1.77		10.5	2.20		11.2	2.43		11.9	2.67		13.4	3.19		14.1	3.39	
	31.0	7.56	1.49		9.02	1.89		10.5	2.35		11.2	2.59		11.9	2.85		13.4	3.41		13.9	3.53	
	33.0	7.56	1.58		9.02	2.01		10.5	2.50		11.2	2.77		11.9	3.04		13.4	3.63		13.6	3.66	
	35.0	7.56	1.68		9.02	2.14		10.5	2.67		11.2	2.95		11.9	3.25		13.2	3.76		13.4	3.79	
	37.0	7.56	1.78		9.02	2.28		10.5	2.84		11.2	3.14		11.9	3.46		12.9	3.90		13.2	3.92	
	39.0	7.56	1.89		9.02	2.43		10.5	3.03		11.2	3.35		11.9	3.69		12.7	4.03		13.0	4.06	
90	10.0	6.80	0.91		8.11	1.10		9.42	1.30		10.1	1.40		10.7	1.50		12.0	1.72		13.4	1.93	
	12.0	6.80	0.93		8.11	1.12		9.42	1.32		10.1	1.42		10.7	1.53		12.0	1.75		13.4	1.97	
	14.0	6.80	0.94		8.11	1.14		9.42	1.34		10.1	1.45		10.7	1.56		12.0	1.78		13.4	2.01	
	16.0	6.80	0.96		8.11	1.16		9.42	1.37		10.1	1.48		10.7	1.59		12.0	1.82		13.4	2.05	
	18.0	6.80	0.98		8.11	1.18		9.42	1.40		10.1	1.51		10.7	1.62		12.0	1.85		13.4	2.16	
	20.0	6.80	0.99		8.11	1.20		9.42	1.42		10.1	1.54		10.7	1.68		12.0	1.99		13.4	2.33	
	21.0	6.80	1.00		8.11	1.21		9.42	1.45		10.1	1.59		10.7	1.74		12.0	2.06		13.4	2.41	
	23.0	6.80	1.02		8.11	1.26		9.42	1.55		10.1	1.70		10.7	1.87		12.0	2.21		13.4	2.59	
	25.0	6.80	1.08		8.11	1.35		9.42	1.66		10.1	1.82		10.7	2.00		12.0	2.37		13.4	2.77	
	27.0	6.80	1.15		8.11	1.44		9.42	1.77		10.1	1.95		10.7	2.14		12.0	2.54		13.4	2.97	
	29.0	6.80	1.22		8.11	1.53		9.42	1.89		10.1	2.08		10.7	2.28		12.0	2.71		13.4	3.18	
	31.0	6.80	1.30		8.11	1.63		9.42	2.01		10.1	2.22		10.7	2.43		12.0	2.90		13.4	3.40	
	33.0	6.80	1.38		8.11	1.74		9.42	2.15		10.1	2.37		10.7	2.60		12.0	3.09		13.4	3.63	
	35.0	6.80	1.46		8.11	1.85		9.42	2.28		10.1	2.52		10.7	2.77		12.0	3.30		13.2	3.76	
	37.0	6.80	1.55		8.11	1.97		9.42	2.43		10.1	2.68		10.7	2.95		12.0	3.52		12.9	3.90	
	39.0	6.80	1.65		8.11	2.09		9.42	2.59		10.1	2.86		10.7	3.14		12.0	3.75		12.7	4.03	

TC Total capacity ; kW
PI Power Input ; kW(Comp.+Outdoor fan motor)

12

Cooling capacity

Combination(%) (Capacity index)	Outdoor air temp.	INDOOR AIR TEMP. :°C															
		14.0		16.0		18.0		19.0		20.0		22.0		24.0			
		TC	PI	TC	PI	TC	PI	TC	PI	TC	PI	TC	PI	TC	PI		
	°CDB	kW	kW	kW	kW	kW	kW	kW	kW	kW	kW	kW	kW	kW	kW		
130	10.0	12.3	1.83	14.6	2.24	17.0	2.66	18.2	2.88	19.1	3.02	19.6	2.89	20.0	2.76		
	12.0	12.3	1.86	14.6	2.28	17.0	2.71	18.2	2.93	18.9	3.00	19.3	2.87	19.8	2.82		
	14.0	12.3	1.90	14.6	2.32	17.0	2.76	18.2	2.99	18.6	2.98	19.1	2.96	19.5	2.98		
	16.0	12.3	1.93	14.6	2.37	17.0	2.82	18.2	3.08	18.4	3.09	18.8	3.12	19.3	3.14		
	18.0	12.3	1.97	14.6	2.42	17.0	3.00	17.9	3.23	18.1	3.25	18.6	3.28	19.0	3.30		
	20.0	12.3	2.01	14.6	2.57	17.0	3.23	17.7	3.39	17.9	3.41	18.3	3.44	18.8	3.46		
	21.0	12.3	2.07	14.6	2.67	17.0	3.34	17.5	3.47	17.8	3.48	18.2	3.52	18.7	3.55		
	23.0	12.3	2.21	14.6	2.86	17.0	3.59	17.3	3.63	17.5	3.64	18.0	3.68	18.4	3.71		
	25.0	12.3	2.37	14.6	3.06	16.8	3.77	17.1	3.79	17.3	3.80	17.7	3.84	18.2	3.87		
	27.0	12.3	2.53	14.6	3.27	16.6	3.93	16.8	3.94	17.0	3.96	17.5	4.00	17.9	4.04		
	29.0	12.3	2.70	14.6	3.50	16.3	4.08	16.6	4.10	16.8	4.12	17.2	4.16	17.7	4.20		
	31.0	12.3	2.88	14.6	3.74	16.1	4.24	16.3	4.26	16.5	4.28	17.0	4.33	17.4	4.37		
	33.0	12.3	3.07	14.6	3.99	15.8	4.40	16.1	4.43	16.3	4.45	16.7	4.49	17.2	4.53		
	35.0	12.3	3.27	14.6	4.25	15.6	4.56	15.8	4.59	16.0	4.61	16.5	4.66	16.9	4.70		
	37.0	12.3	3.48	14.6	4.54	15.3	4.73	15.6	4.75	15.8	4.77	16.2	4.82	16.7	4.87		
	39.0	12.3	3.70	14.6	4.84	15.1	4.89	15.3	4.91	15.5	4.94	16.0	4.99	16.4	5.04		
120	10.0	11.3	1.67	13.5	2.04	15.7	2.43	16.8	2.62	17.9	2.82	19.3	2.98	19.7	2.86		
	12.0	11.3	1.70	13.5	2.08	15.7	2.47	16.8	2.67	17.9	2.87	19.0	2.96	19.4	2.84		
	14.0	11.3	1.73	13.5	2.12	15.7	2.52	16.8	2.72	17.9	2.93	18.8	2.94	19.2	2.96		
	16.0	11.3	1.77	13.5	2.16	15.7	2.57	16.8	2.78	17.9	3.01	18.5	3.10	18.9	3.12		
	18.0	11.3	1.80	13.5	2.20	15.7	2.66	16.8	2.94	17.9	3.23	18.3	3.26	18.7	3.28		
	20.0	11.3	1.83	13.5	2.29	15.7	2.86	16.8	3.16	17.6	3.39	18.0	3.41	18.4	3.44		
	21.0	11.3	1.85	13.5	2.37	15.7	2.96	16.8	3.28	17.5	3.47	17.9	3.49	18.3	3.52		
	23.0	11.3	1.98	13.5	2.54	15.7	3.17	16.8	3.52	17.2	3.62	17.7	3.65	18.1	3.68		
	25.0	11.3	2.11	13.5	2.72	15.7	3.40	16.8	3.77	17.0	3.78	17.4	3.81	17.8	3.84		
	27.0	11.3	2.26	13.5	2.91	15.7	3.64	16.5	3.92	16.7	3.94	17.2	3.97	17.6	4.01		
	29.0	11.3	2.41	13.5	3.10	15.7	3.89	16.3	4.08	16.5	4.10	16.9	4.13	17.3	4.17		
	31.0	11.3	2.57	13.5	3.31	15.7	4.16	16.0	4.24	16.2	4.26	16.7	4.30	17.1	4.33		
	33.0	11.3	2.73	13.5	3.53	15.6	4.38	15.8	4.40	16.0	4.42	16.4	4.46	16.8	4.50		
	35.0	11.3	2.91	13.5	3.77	15.3	4.54	15.5	4.56	15.8	4.58	16.2	4.62	16.6	4.67		
	37.0	11.3	3.10	13.5	4.02	15.1	4.70	15.3	4.72	15.5	4.74	15.9	4.79	16.3	4.83		
	39.0	11.3	3.29	13.5	4.28	14.8	4.86	15.1	4.88	15.3	4.91	15.7	4.95	16.1	5.00		
110	10.0	10.4	1.52	12.4	1.85	14.4	2.19	15.4	2.37	16.4	2.55	18.4	2.91	19.3	2.96		
	12.0	10.4	1.54	12.4	1.88	14.4	2.23	15.4	2.42	16.4	2.60	18.4	2.97	19.1	2.94		
	14.0	10.4	1.57	12.4	1.92	14.4	2.28	15.4	2.46	16.4	2.65	18.4	3.02	18.8	2.94		
	16.0	10.4	1.60	12.4	1.95	14.4	2.32	15.4	2.51	16.4	2.70	18.2	3.08	18.6	3.10		
	18.0	10.4	1.63	12.4	1.99	14.4	2.37	15.4	2.58	16.4	2.84	18.0	3.24	18.3	3.26		
	20.0	10.4	1.66	12.4	2.03	14.4	2.51	15.4	2.77	16.4	3.05	17.7	3.39	18.1	3.42		
	21.0	10.4	1.68	12.4	2.09	14.4	2.60	15.4	2.87	16.4	3.16	17.6	3.47	18.0	3.50		
	23.0	10.4	1.76	12.4	2.24	14.4	2.79	15.4	3.08	16.4	3.39	17.3	3.63	17.7	3.66		
	25.0	10.4	1.88	12.4	2.40	14.4	2.98	15.4	3.30	16.4	3.63	17.1	3.79	17.5	3.82		
	27.0	10.4	2.00	12.4	2.56	14.4	3.19	15.4	3.53	16.4	3.89	16.8	3.95	17.2	3.98		
	29.0	10.4	2.14	12.4	2.73	14.4	3.41	15.4	3.77	16.2	4.07	16.6	4.11	17.0	4.14		
	31.0	10.4	2.27	12.4	2.92	14.4	3.64	15.4	4.03	16.0	4.23	16.3	4.27	16.7	4.30		
	33.0	10.4	2.42	12.4	3.11	14.4	3.88	15.4	4.31	15.7	4.39	16.1	4.43	16.5	4.47		
	35.0	10.4	2.57	12.4	3.31	14.4	4.14	15.3	4.53	15.5	4.55	15.8	4.59	16.2	4.63		
	37.0	10.4	2.74	12.4	3.53	14.4	4.42	15.0	4.69	15.2	4.71	15.6	4.75	16.0	4.79		
	39.0	10.4	2.91	12.4	3.75	14.4	4.71	14.8	4.85	15.0	4.87	15.4	4.92	15.7	4.96		
100	10.0	9.45	1.37	11.3	1.66	13.1	1.97	14.0	2.12	14.9	2.28	16.7	2.61	18.6	2.94		
	12.0	9.45	1.39	11.3	1.69	13.1	2.00	14.0	2.16	14.9	2.33	16.7	2.66	18.6	3.00		
	14.0	9.45	1.42	11.3	1.72	13.1	2.04	14.0	2.20	14.9	2.37	16.7	2.71	18.5	3.03		
	16.0	9.45	1.44	11.3	1.75	13.1	2.08	14.0	2.25	14.9	2.42	16.7	2.76	18.2	3.08		
	18.0	9.45	1.47	11.3	1.79	13.1	2.12	14.0	2.29	14.9	2.47	16.7	2.92	18.0	3.24		
	20.0	9.45	1.50	11.3	1.82	13.1	2.18	14.0	2.41	14.9	2.64	16.7	3.14	17.7	3.39		
	21.0	9.45	1.51	11.3	1.84	13.1	2.26	14.0	2.49	14.9	2.74	16.7	3.26	17.6	3.47		
	23.0	9.45	1.55	11.3	1.96	13.1	2.42	14.0	2.67	14.9	2.93	16.7	3.49	17.4	3.63		
	25.0	9.45	1.66	11.3	2.10	13.1	2.59	14.0	2.86	14.9	3.14	16.7	3.75	17.1	3.79		
	27.0	9.45	1.76	11.3	2.24	13.1	2.77	14.0	3.06	14.9	3.36	16.5	3.92	16.9	3.95		
	29.0	9.45	1.88	11.3	2.39	13.1	2.96	14.0	3.27	14.9	3.59	16.3	4.08	16.6	4.11		
	31.0	9.45	2.00	11.3	2.54	13.1	3.16	14.0	3.49	14.9	3.84	16.0	4.24	16.4	4.27		
	33.0	9.45	2.13	11.3	2.71	13.1	3.37	14.0	3.72	14.9	4.10	15.8	4.40	16.1	4.43		
	35.0	9.45	2.26	11.3	2.88	13.1	3.59	14.0	3.97	14.9	4.37	15.5	4.56	15.9	4.59		
	37.0	9.45	2.40	11.3	3.07	13.1	3.82	14.0	4.23	14.9	4.66	15.3	4.72	15.6	4.76		
	39.0	9.45	2.55	11.3	3.27	13.1	4.07	14.0	4.51	14.7	4.84	15.0	4.88	15.4	4.92		
90	10.0	8.50	1.22	10.1	1.48	11.8	1.74	12.6	1.88	13.4	2.02	15.1	2.31	16.7	2.60		
	12.0	8.50	1.25	10.1	1.50	11.8	1.78	12.6	1.92	13.4	2.06	15.1	2.35	16.7	2.65		
	14.0	8.50	1.27	10.1	1.53	11.8	1.81	12.6	1.95	13.4	2.10	15.1	2.40	16.7	2.70		
	16.0	8.50	1.29	10.1	1.56	11.8	1.84	12.6	1.99	13.4	2.14	15.1	2.45	16.7	2.76		
	18.0	8.50	1.31	10.1	1.59	11.8	1.88	12.6	2.03	13.4	2.18	15.1	2.49	16.7	2.91		
	20.0	8.50	1.34	10.1	1.62	11.8	1.92	12.6	2.07	13.4	2.26	15.1	2.68	16.7	3.13		
	21.0	8.50	1.35	10.1	1.63	11.8	1.95	12.6	2.14	13.4	2.34	15.1	2.78	16.7	3.25		
	23.0	8.50	1.37	10.1	1.70	11.8	2.09	12.6	2.29	13.4	2.51	15.1	2.98	16.7	3.48		
	25.0	8.50	1.45	10.1	1.82	11.8	2.23	12.6	2.45	13.4	2.69	15.1	3.19	16.7	3.73		
	27.0	8.50	1.54	10.1	1.94	11.8	2.38	12.6	2.62	13.4	2.87	15.1	3.41	16.5	3.92		
	29.0	8.50	1.64	10.1	2.07	11.8	2.54	12.6	2.80	13.4	3.07	15.1	3.65	16.3	4.08		
	31.0	8.50	1.74	10.1	2.20	11.8	2.71	12.6	2.99	13.4	3.28	15.1	3.90	16.0	4.24		
	33.0	8.50	1.85	10.1	2.34	11.8	2.89	12.6	3.18	13.4	3.49	15.1	4.16	15.8	4.40		
	35.0	8.50	1.97	10.1	2.49	11.8	3.07	12.6	3.39	13.4	3.72	15.1	4.44	15.5	4.56		
	37.0	8.50	2.09	10.1	2.65	11.8	3.27	12.6	3.61	13.4	3.97	15.0	4.69	15.3	4.72		
	39.0	8.50	2.21	10.1	2.81	11.8	3.48	12.6	3.85	13.4	4.23	14.7	4.85	15.0	4.88		

Cooling capacity

Combination(%) (Capacity index)	Outdoor air temp.	INDOOR AIR TEMP. :°C															
		14.0		16.0		18.0		19.0		20.0		22.0		24.0			
		TC	PI	TC	PI	TC	PI	TC	PI	TC	PI	TC	PI	TC	PI		
	°CDB	kW	kW	kW	kW	kW	kW	kW	kW	kW	kW	kW	kW	kW	kW		
80	10.0	7.56	1.09	9.02	1.30	10.5	1.53	11.2	1.65	11.9	1.77	13.4	2.02	14.8	2.27		
	12.0	7.56	1.10	9.02	1.32	10.5	1.56	11.2	1.68	11.9	1.80	13.4	2.05	14.8	2.31		
	14.0	7.56	1.12	9.02	1.35	10.5	1.59	11.2	1.71	11.9	1.83	13.4	2.09	14.8	2.36		
	16.0	7.56	1.14	9.02	1.37	10.5	1.61	11.2	1.74	11.9	1.87	13.4	2.13	14.8	2.40		
	18.0	7.56	1.16	9.02	1.40	10.5	1.65	11.2	1.77	11.9	1.91	13.4	2.18	14.8	2.45		
	20.0	7.56	1.18	9.02	1.42	10.5	1.68	11.2	1.81	11.9	1.94	13.4	2.26	14.8	2.62		
	21.0	7.56	1.19	9.02	1.44	10.5	1.69	11.2	1.83	11.9	1.98	13.4	2.34	14.8	2.72		
	23.0	7.56	1.21	9.02	1.46	10.5	1.78	11.2	1.95	11.9	2.12	13.4	2.50	14.8	2.91		
	25.0	7.56	1.25	9.02	1.56	10.5	1.90	11.2	2.08	11.9	2.27	13.4	2.68	14.8	3.12		
	27.0	7.56	1.33	9.02	1.66	10.5	2.02	11.2	2.22	11.9	2.42	13.4	2.86	14.8	3.34		
	29.0	7.56	1.42	9.02	1.77	10.5	2.16	11.2	2.37	11.9	2.59	13.4	3.06	14.8	3.57		
	31.0	7.56	1.51	9.02	1.88	10.5	2.30	11.2	2.52	11.9	2.76	13.4	3.26	14.8	3.81		
	33.0	7.56	1.60	9.02	2.00	10.5	2.45	11.2	2.69	11.9	2.94	13.4	3.48	14.8	4.07		
	35.0	7.56	1.69	9.02	2.12	10.5	2.60	11.2	2.86	11.9	3.13	13.4	3.71	14.8	4.34		
	37.0	7.56	1.80	9.02	2.25	10.5	2.77	11.2	3.04	11.9	3.33	13.4	3.95	14.8	4.63		
	39.0	7.56	1.90	9.02	2.39	10.5	2.94	11.2	3.24	11.9	3.55	13.4	4.21	14.7	4.84		
70	10.0	6.61	0.96	7.89	1.13	9.16	1.32	9.80	1.42	10.4	1.52	11.7	1.73	13.0	1.95		
	12.0	6.61	0.97	7.89	1.15	9.16	1.35	9.80	1.45	10.4	1.55	11.7	1.76	13.0	1.98		
	14.0	6.61	0.99	7.89	1.17	9.16	1.37	9.80	1.47	10.4	1.58	11.7	1.80	13.0	2.02		
	16.0	6.61	1.00	7.89	1.19	9.16	1.40	9.80	1.50	10.4	1.61	11.7	1.83	13.0	2.06		
	18.0	6.61	1.02	7.89	1.21	9.16	1.42	9.80	1.53	10.4	1.64	11.7	1.87	13.0	2.10		
	20.0	6.61	1.03	7.89	1.24	9.16	1.45	9.80	1.56	10.4	1.67	11.7	1.90	13.0	2.16		
	21.0	6.61	1.04	7.89	1.25	9.16	1.46	9.80	1.57	10.4	1.69	11.7	1.93	13.0	2.24		
	23.0	6.61	1.06	7.89	1.27	9.16	1.49	9.80	1.63	10.4	1.77	11.7	2.07	13.0	2.40		
	25.0	6.61	1.08	7.89	1.32	9.16	1.59	9.80	1.74	10.4	1.89	11.7	2.21	13.0	2.56		
	27.0	6.61	1.14	7.89	1.40	9.16	1.70	9.80	1.85	10.4	2.01	11.7	2.36	13.0	2.74		
	29.0	6.61	1.21	7.89	1.49	9.16	1.80	9.80	1.97	10.4	2.15	11.7	2.52	13.0	2.92		
	31.0	6.61	1.29	7.89	1.59	9.16	1.92	9.80	2.10	10.4	2.29	11.7	2.69	13.0	3.12		
	33.0	6.61	1.36	7.89	1.68	9.16	2.04	9.80	2.23	10.4	2.43	11.7	2.86	13.0	3.33		
	35.0	6.61	1.44	7.89	1.79	9.16	2.17	9.80	2.37	10.4	2.59	11.7	3.05	13.0	3.55		
	37.0	6.61	1.53	7.89	1.89	9.16	2.30	9.80	2.52	10.4	2.75	11.7	3.25	13.0	3.78		
	39.0	6.61	1.62	7.89	2.01	9.16	2.45	9.80	2.68	10.4	2.93	11.7	3.45	13.0	4.02		
60	10.0	5.67	0.83	6.76	0.98	7.85	1.13	8.40	1.21	8.95	1.29	10.0	1.46	11.1	1.64		
	12.0	5.67	0.84	6.76	0.99	7.85	1.15	8.40	1.23	8.95	1.31	10.0	1.49	11.1	1.67		
	14.0	5.67	0.86	6.76	1.01	7.85	1.17	8.40	1.25	8.95	1.34	10.0	1.51	11.1	1.70		
	16.0	5.67	0.87	6.76	1.02	7.85	1.19	8.40	1.27	8.95	1.36	10.0	1.54	11.1	1.73		
	18.0	5.67	0.88	6.76	1.04	7.85	1.21	8.40	1.30	8.95	1.39	10.0	1.57	11.1	1.76		
	20.0	5.67	0.90	6.76	1.06	7.85	1.23	8.40	1.32	8.95	1.41	10.0	1.60	11.1	1.80		
	21.0	5.67	0.90	6.76	1.07	7.85	1.24	8.40	1.33	8.95	1.42	10.0	1.62	11.1	1.81		
	23.0	5.67	0.92	6.76	1.09	7.85	1.26	8.40	1.36	8.95	1.45	10.0	1.68	11.1	1.93		
	25.0	5.67	0.93	6.76	1.10	7.85	1.31	8.40	1.43	8.95	1.54	10.0	1.79	11.1	2.06		
	27.0	5.67	0.97	6.76	1.17	7.85	1.40	8.40	1.52	8.95	1.64	10.0	1.91	11.1	2.20		
	29.0	5.67	1.02	6.76	1.24	7.85	1.49	8.40	1.61	8.95	1.75	10.0	2.04	11.1	2.35		
	31.0	5.67	1.08	6.76	1.32	7.85	1.58	8.40	1.72	8.95	1.86	10.0	2.17	11.1	2.50		
	33.0	5.67	1.15	6.76	1.40	7.85	1.67	8.40	1.82	8.95	1.98	10.0	2.31	11.1	2.66		
	35.0	5.67	1.21	6.76	1.48	7.85	1.78	8.40	1.94	8.95	2.10	10.0	2.45	11.1	2.83		
	37.0	5.67	1.28	6.76	1.57	7.85	1.88	8.40	2.05	8.95	2.23	10.0	2.61	11.1	3.02		
	39.0	5.67	1.35	6.76	1.66	7.85	2.00	8.40	2.18	8.95	2.37	10.0	2.77	11.1	3.21		
50	10.0	4.72	0.71	5.63	0.83	6.54	0.95	7.00	1.01	7.46	1.07	8.37	1.20	9.28	1.34		
	12.0	4.72	0.72	5.63	0.84	6.54	0.96	7.00	1.02	7.46	1.09	8.37	1.22	9.28	1.36		
	14.0	4.72	0.73	5.63	0.85	6.54	0.98	7.00	1.04	7.46	1.11	8.37	1.25	9.28	1.39		
	16.0	4.72	0.74	5.63	0.86	6.54	0.99	7.00	1.06	7.46	1.13	8.37	1.27	9.28	1.41		
	18.0	4.72	0.75	5.63	0.88	6.54	1.01	7.00	1.08	7.46	1.15	8.37	1.29	9.28	1.44		
	20.0	4.72	0.76	5.63	0.89	6.54	1.02	7.00	1.09	7.46	1.17	8.37	1.31	9.28	1.47		
	21.0	4.72	0.77	5.63	0.90	6.54	1.03	7.00	1.10	7.46	1.18	8.37	1.33	9.28	1.48		
	23.0	4.72	0.78	5.63	0.91	6.54	1.05	7.00	1.12	7.46	1.20	8.37	1.35	9.28	1.52		
	25.0	4.72	0.79	5.63	0.93	6.54	1.07	7.00	1.15	7.46	1.23	8.37	1.42	9.28	1.62		
	27.0	4.72	0.81	5.63	0.96	6.54	1.13	7.00	1.22	7.46	1.31	8.37	1.51	9.28	1.72		
	29.0	4.72	0.85	5.63	1.02	6.54	1.20	7.00	1.29	7.46	1.39	8.37	1.61	9.28	1.83		
	31.0	4.72	0.90	5.63	1.08	6.54	1.27	7.00	1.37	7.46	1.48	8.37	1.71	9.28	1.95		
	33.0	4.72	0.95	5.63	1.14	6.54	1.35	7.00	1.46	7.46	1.57	8.37	1.81	9.28	2.07		
	35.0	4.72	1.00	5.63	1.21	6.54	1.43	7.00	1.54	7.46	1.67	8.37	1.93	9.28	2.20		
	37.0	4.72	1.06	5.63	1.27	6.54	1.51	7.00	1.63	7.46	1.77	8.37	2.04	9.28	2.34		
	39.0	4.72	1.12	5.63	1.35	6.54	1.60	7.00	1.73	7.46	1.87	8.37	2.17	9.28	2.49		

TC Total capacity ; kW
PI Power Input ; kW(Comp.+Outdoor fan motor)

Cooling capacity

Combination(%) (Capacity index)	Outdoor air temp.	INDOOR AIR TEMP. :°C															
		14.0		16.0		18.0		19.0		20.0		22.0		24.0			
		TC	PI	TC	PI	TC	PI	TC	PI	TC	PI	TC	PI	TC	PI		
	°CDB	kW	kW	kW	kW	kW	kW	kW	kW	kW	kW	kW	kW	kW	kW		
130	10.0	13.6	2.04	16.2	2.50	18.8	2.98	20.2	3.22	20.4	3.15	20.9	3.02	21.4	2.88		
	12.0	13.6	2.08	16.2	2.55	18.8	3.03	19.9	3.20	20.1	3.13	20.6	3.00	21.1	2.95		
	14.0	13.6	2.12	16.2	2.60	18.8	3.09	19.6	3.18	19.9	3.12	20.4	3.09	20.9	3.12		
	16.0	13.6	2.16	16.2	2.65	18.8	3.15	19.4	3.21	19.6	3.23	20.1	3.26	20.6	3.28		
	18.0	13.6	2.20	16.2	2.70	18.8	3.35	19.1	3.38	19.3	3.39	19.8	3.42	20.3	3.45		
	20.0	13.6	2.25	16.2	2.88	18.6	3.52	18.8	3.54	19.1	3.56	19.6	3.59	20.1	3.62		
	21.0	13.6	2.31	16.2	2.98	18.5	3.60	18.7	3.62	19.0	3.64	19.4	3.67	19.9	3.71		
	23.0	13.6	2.47	16.2	3.20	18.2	3.77	18.4	3.79	18.7	3.81	19.2	3.84	19.7	3.88		
	25.0	13.6	2.65	16.2	3.42	17.9	3.93	18.2	3.95	18.4	3.97	18.9	4.01	19.4	4.05		
	27.0	13.6	2.83	16.2	3.66	17.7	4.10	17.9	4.12	18.2	4.14	18.7	4.18	19.1	4.22		
	29.0	13.6	3.02	16.2	3.91	17.4	4.26	17.7	4.29	17.9	4.31	18.4	4.35	18.9	4.39		
	31.0	13.6	3.22	16.2	4.18	17.2	4.43	17.4	4.45	17.6	4.48	18.1	4.52	18.6	4.57		
	33.0	13.6	3.43	16.2	4.46	16.9	4.60	17.1	4.62	17.4	4.65	17.9	4.69	18.4	4.74		
	35.0	13.6	3.65	16.1	4.72	16.6	4.77	16.9	4.79	17.1	4.82	17.6	4.87	18.1	4.92		
	37.0	13.6	3.89	15.9	4.88	16.4	4.93	16.6	4.96	16.9	4.99	17.3	5.04	17.8	5.10		
	39.0	13.6	4.14	15.6	5.05	16.1	5.10	16.3	5.13	16.6	5.16	17.1	5.22	17.6	5.27		
120	10.0	12.6	1.87	15.0	2.28	17.4	2.71	18.6	2.93	19.8	3.15	20.5	3.11	21.0	2.99		
	12.0	12.6	1.90	15.0	2.32	17.4	2.76	18.6	2.99	19.8	3.21	20.3	3.09	20.7	2.97		
	14.0	12.6	1.94	15.0	2.37	17.4	2.82	18.6	3.05	19.6	3.20	20.0	3.07	20.5	3.09		
	16.0	12.6	1.97	15.0	2.41	17.4	2.87	18.6	3.10	19.3	3.21	19.8	3.23	20.2	3.26		
	18.0	12.6	2.01	15.0	2.46	17.4	2.97	18.6	3.29	19.0	3.37	19.5	3.40	19.9	3.43		
	20.0	12.6	2.05	15.0	2.56	17.4	3.19	18.6	3.52	18.8	3.54	19.2	3.57	19.7	3.60		
	21.0	12.6	2.07	15.0	2.65	17.4	3.31	18.4	3.60	18.6	3.62	19.1	3.65	19.6	3.68		
	23.0	12.6	2.21	15.0	2.84	17.4	3.55	18.2	3.77	18.4	3.78	18.8	3.82	19.3	3.85		
	25.0	12.6	2.37	15.0	3.04	17.4	3.80	17.9	3.93	18.1	3.95	18.6	3.98	19.0	4.02		
	27.0	12.6	2.53	15.0	3.25	17.4	4.07	17.6	4.09	17.9	4.11	18.3	4.15	18.8	4.19		
	29.0	12.6	2.69	15.0	3.47	17.1	4.24	17.4	4.26	17.6	4.28	18.0	4.32	18.5	4.36		
	31.0	12.6	2.87	15.0	3.71	16.9	4.41	17.1	4.43	17.3	4.45	17.8	4.49	18.2	4.53		
	33.0	12.6	3.06	15.0	3.95	16.6	4.57	16.8	4.59	17.1	4.62	17.5	4.66	18.0	4.71		
	35.0	12.6	3.25	15.0	4.21	16.4	4.74	16.6	4.76	16.8	4.79	17.3	4.83	17.7	4.88		
	37.0	12.6	3.46	15.0	4.49	16.1	4.91	16.3	4.93	16.5	4.95	17.0	5.00	17.5	5.05		
	39.0	12.6	3.68	15.0	4.78	15.8	5.07	16.1	5.10	16.3	5.13	16.7	5.18	17.2	5.23		
110	10.0	11.5	1.70	13.7	2.07	15.9	2.45	17.1	2.65	18.2	2.85	20.2	3.21	20.6	3.09		
	12.0	11.5	1.73	13.7	2.10	15.9	2.50	17.1	2.70	18.2	2.91	19.9	3.19	20.3	3.07		
	14.0	11.5	1.76	13.7	2.14	15.9	2.55	17.1	2.75	18.2	2.96	19.7	3.17	20.1	3.07		
	16.0	11.5	1.79	13.7	2.18	15.9	2.60	17.1	2.81	18.2	3.02	19.4	3.21	19.8	3.24		
	18.0	11.5	1.83	13.7	2.23	15.9	2.65	17.1	2.88	18.2	3.17	19.1	3.38	19.6	3.40		
	20.0	11.5	1.86	13.7	2.27	15.9	2.81	17.1	3.10	18.2	3.41	18.9	3.54	19.3	3.57		
	21.0	11.5	1.88	13.7	2.34	15.9	2.91	17.1	3.21	18.2	3.53	18.8	3.62	19.2	3.65		
	23.0	11.5	1.97	13.7	2.51	15.9	3.12	17.1	3.44	18.1	3.76	18.5	3.79	18.9	3.82		
	25.0	11.5	2.10	13.7	2.68	15.9	3.34	17.1	3.69	17.8	3.92	18.2	3.96	18.6	3.99		
	27.0	11.5	2.24	13.7	2.86	15.9	3.57	17.1	3.95	17.6	4.09	18.0	4.12	18.4	4.16		
	29.0	11.5	2.39	13.7	3.06	15.9	3.81	17.1	4.22	17.3	4.25	17.7	4.29	18.1	4.33		
	31.0	11.5	2.54	13.7	3.26	15.9	4.07	16.8	4.40	17.0	4.42	17.4	4.46	17.9	4.50		
	33.0	11.5	2.71	13.7	3.48	15.9	4.34	16.6	4.57	16.8	4.59	17.2	4.63	17.6	4.67		
	35.0	11.5	2.88	13.7	3.70	15.9	4.63	16.3	4.73	16.5	4.75	16.9	4.80	17.3	4.84		
	37.0	11.5	3.06	13.7	3.94	15.8	4.88	16.0	4.90	16.2	4.92	16.7	4.97	17.1	5.01		
	39.0	11.5	3.25	13.7	4.20	15.6	5.04	15.8	5.07	16.0	5.09	16.4	5.14	16.8	5.19		
100	10.0	10.5	1.53	12.5	1.86	14.5	2.20	15.5	2.37	16.5	2.55	18.5	2.92	20.2	3.20		
	12.0	10.5	1.56	12.5	1.89	14.5	2.24	15.5	2.42	16.5	2.60	18.5	2.97	20.0	3.18		
	14.0	10.5	1.58	12.5	1.92	14.5	2.28	15.5	2.47	16.5	2.65	18.5	3.03	19.7	3.16		
	16.0	10.5	1.61	12.5	1.96	14.5	2.33	15.5	2.51	16.5	2.70	18.5	3.09	19.4	3.22		
	18.0	10.5	1.64	12.5	2.00	14.5	2.37	15.5	2.56	16.5	2.76	18.5	3.27	19.2	3.38		
	20.0	10.5	1.67	12.5	2.04	14.5	2.44	15.5	2.69	16.5	2.95	18.5	3.51	18.9	3.54		
	21.0	10.5	1.69	12.5	2.06	14.5	2.53	15.5	2.79	16.5	3.06	18.4	3.60	18.8	3.63		
	23.0	10.5	1.74	12.5	2.19	14.5	2.71	15.5	2.99	16.5	3.28	18.1	3.76	18.5	3.79		
	25.0	10.5	1.85	12.5	2.35	14.5	2.90	15.5	3.20	16.5	3.51	17.9	3.93	18.3	3.96		
	27.0	10.5	1.97	12.5	2.50	14.5	3.10	15.5	3.42	16.5	3.76	17.6	4.09	18.0	4.13		
	29.0	10.5	2.10	12.5	2.67	14.5	3.31	15.5	3.66	16.5	4.02	17.4	4.26	17.7	4.29		
	31.0	10.5	2.24	12.5	2.85	14.5	3.53	15.5	3.90	16.5	4.29	17.1	4.43	17.5	4.46		
	33.0	10.5	2.38	12.5	3.03	14.5	3.77	15.5	4.16	16.5	4.56	16.8	4.59	17.2	4.63		
	35.0	10.5	2.53	12.5	3.23	14.5	4.01	15.5	4.44	16.2	4.72	16.6	4.76	16.9	4.80		
	37.0	10.5	2.68	12.5	3.43	14.5	4.28	15.5	4.73	15.9	4.89	16.3	4.93	16.7	4.97		
	39.0	10.5	2.85	12.5	3.65	14.5	4.55	15.5	5.03	15.7	5.05	16.0	5.10	16.4	5.14		
90	10.0	9.4	1.37	11.2	1.65	13.0	1.95	14.0	2.10	14.9	2.26	16.7	2.58	18.5	2.91		
	12.0	9.4	1.39	11.2	1.68	13.0	1.99	14.0	2.14	14.9	2.30	16.7	2.63	18.5	2.97		
	14.0	9.4	1.42	11.2	1.71	13.0	2.02	14.0	2.18	14.9	2.35	16.7	2.68	18.5	3.02		
	16.0	9.4	1.44	11.2	1.74	13.0	2.06	14.0	2.23	14.9	2.39	16.7	2.74	18.5	3.08		
	18.0	9.4	1.47	11.2	1.78	13.0	2.10	14.0	2.27	14.9	2.44	16.7	2.79	18.5	3.26		
	20.0	9.4	1.49	11.2	1.81	13.0	2.14	14.0	2.32	14.9	2.53	16.7	3.00	18.5	3.50		
	21.0	9.4	1.51	11.2	1.83	13.0	2.18	14.0	2.40	14.9	2.62	16.7	3.11	18.4	3.60		
	23.0	9.4	1.54	11.2	1.90	13.0	2.33	14.0	2.57	14.9	2.81	16.7	3.33	18.1	3.76		
	25.0	9.4	1.62	11.2	2.03	13.0	2.50	14.0	2.74	14.9	3.01	16.7	3.57	17.9	3.93		
	27.0	9.4	1.72	11.2	2.17	13.0	2.66	14.0	2.93	14.9	3.21	16.7	3.82	17.6	4.09		
	29.0	9.4	1.83	11.2	2.31	13.0	2.84	14.0	3.13	14.9	3.43	16.7	4.08	17.3	4.26		
	31.0	9.4	1.95	11.2	2.46	13.0	3.03	14.0	3.34	14.9	3.66	16.7	4.36	17.1	4.42		
	33.0	9.4	2.07	11.2	2.62	13.0	3.23	14.0	3.56	14.9	3.91	16.5	4.56	16.8	4.59		
	35.0	9.4	2.20	11.2	2.78	13.0	3.44	14.0	3.79	14.9	4.17	16.2	4.72	16.6	4.76		
	37.0	9.4	2.33	11.2	2.96	13.0	3.66	14.0	4.04	14.9	4.44	16.0	4.89	16.3	4.93		
	39.0	9.4	2.48	11.2	3.14	13.0	3.90	14.0	4.30	14.9	4.73	15.7	5.06	16.0	5.10		

Cooling capacity

Combination(%) (Capacity index)	Outdoor air temp.	INDOOR AIR TEMP. :°C															
		14.0		16.0		18.0		19.0		20.0		22.0		24.0			
		TC	PI	TC	PI	TC	PI	TC	PI	TC	PI	TC	PI	TC	PI		
	°CDB	kW	kW	kW	kW	kW	kW	kW	kW	kW	kW	kW	kW	kW	kW		
80	10.0	8.37	1.22	9.98	1.46	11.6	1.71	12.4	1.84	13.2	1.98	14.8	2.26	16.4	2.54		
	12.0	8.37	1.24	9.98	1.48	11.6	1.74	12.4	1.88	13.2	2.01	14.8	2.30	16.4	2.59		
	14.0	8.37	1.26	9.98	1.51	11.6	1.77	12.4	1.91	13.2	2.05	14.8	2.34	16.4	2.64		
	16.0	8.37	1.28	9.98	1.53	11.6	1.81	12.4	1.95	13.2	2.09	14.8	2.39	16.4	2.69		
	18.0	8.37	1.30	9.98	1.56	11.6	1.84	12.4	1.98	13.2	2.13	14.8	2.43	16.4	2.74		
	20.0	8.37	1.32	9.98	1.59	11.6	1.88	12.4	2.02	13.2	2.17	14.8	2.52	16.4	2.93		
	21.0	8.37	1.33	9.98	1.61	11.6	1.89	12.4	2.04	13.2	2.22	14.8	2.61	16.4	3.04		
	23.0	8.37	1.36	9.98	1.64	11.6	1.99	12.4	2.18	13.2	2.37	14.8	2.80	16.4	3.26		
	25.0	8.37	1.40	9.98	1.74	11.6	2.12	12.4	2.33	13.2	2.54	14.8	3.00	16.4	3.49		
	27.0	8.37	1.49	9.98	1.86	11.6	2.26	12.4	2.48	13.2	2.71	14.8	3.20	16.4	3.73		
	29.0	8.37	1.59	9.98	1.98	11.6	2.41	12.4	2.65	13.2	2.89	14.8	3.42	16.4	3.99		
	31.0	8.37	1.68	9.98	2.10	11.6	2.57	12.4	2.82	13.2	3.09	14.8	3.65	16.4	4.26		
	33.0	8.37	1.79	9.98	2.23	11.6	2.73	12.4	3.00	13.2	3.29	14.8	3.89	16.4	4.55		
	35.0	8.37	1.89	9.98	2.37	11.6	2.91	12.4	3.20	13.2	3.50	14.8	4.15	16.2	4.72		
	37.0	8.37	2.01	9.98	2.52	11.6	3.09	12.4	3.40	13.2	3.73	14.8	4.42	15.9	4.89		
	39.0	8.37	2.13	9.98	2.68	11.6	3.29	12.4	3.62	13.2	3.97	14.8	4.71	15.7	5.05		
70	10.0	7.32	1.07	8.73	1.27	10.1	1.48	10.9	1.59	11.6	1.70	13.0	1.94	14.4	2.18		
	12.0	7.32	1.09	8.73	1.29	10.1	1.51	10.9	1.62	11.6	1.73	13.0	1.97	14.4	2.22		
	14.0	7.32	1.10	8.73	1.31	10.1	1.53	10.9	1.65	11.6	1.77	13.0	2.01	14.4	2.26		
	16.0	7.32	1.12	8.73	1.33	10.1	1.56	10.9	1.68	11.6	1.80	13.0	2.05	14.4	2.30		
	18.0	7.32	1.14	8.73	1.36	10.1	1.59	10.9	1.71	11.6	1.83	13.0	2.09	14.4	2.35		
	20.0	7.32	1.16	8.73	1.38	10.1	1.62	10.9	1.74	11.6	1.87	13.0	2.13	14.4	2.42		
	21.0	7.32	1.17	8.73	1.39	10.1	1.63	10.9	1.76	11.6	1.89	13.0	2.16	14.4	2.50		
	23.0	7.32	1.19	8.73	1.42	10.1	1.67	10.9	1.82	11.6	1.98	13.0	2.31	14.4	2.68		
	25.0	7.32	1.21	8.73	1.48	10.1	1.78	10.9	1.94	11.6	2.11	13.0	2.47	14.4	2.87		
	27.0	7.32	1.28	8.73	1.57	10.1	1.90	10.9	2.07	11.6	2.25	13.0	2.64	14.4	3.06		
	29.0	7.32	1.36	8.73	1.67	10.1	2.02	10.9	2.21	11.6	2.40	13.0	2.82	14.4	3.27		
	31.0	7.32	1.44	8.73	1.77	10.1	2.15	10.9	2.35	11.6	2.56	13.0	3.01	14.4	3.49		
	33.0	7.32	1.52	8.73	1.88	10.1	2.28	10.9	2.50	11.6	2.72	13.0	3.20	14.4	3.72		
	35.0	7.32	1.61	8.73	2.00	10.1	2.43	10.9	2.66	11.6	2.90	13.0	3.41	14.4	3.97		
	37.0	7.32	1.71	8.73	2.12	10.1	2.58	10.9	2.82	11.6	3.08	13.0	3.63	14.4	4.23		
	39.0	7.32	1.81	8.73	2.25	10.1	2.74	10.9	3.00	11.6	3.27	13.0	3.86	14.4	4.50		
60	10.0	6.28	0.93	7.49	1.09	8.70	1.26	9.30	1.35	9.90	1.44	11.1	1.63	12.3	1.83		
	12.0	6.28	0.94	7.49	1.11	8.70	1.28	9.30	1.38	9.90	1.47	11.1	1.66	12.3	1.86		
	14.0	6.28	0.96	7.49	1.13	8.70	1.31	9.30	1.40	9.90	1.49	11.1	1.69	12.3	1.90		
	16.0	6.28	0.97	7.49	1.14	8.70	1.33	9.30	1.42	9.90	1.52	11.1	1.72	12.3	1.93		
	18.0	6.28	0.99	7.49	1.16	8.70	1.35	9.30	1.45	9.90	1.55	11.1	1.76	12.3	1.97		
	20.0	6.28	1.00	7.49	1.18	8.70	1.38	9.30	1.48	9.90	1.58	11.1	1.79	12.3	2.01		
	21.0	6.28	1.01	7.49	1.19	8.70	1.39	9.30	1.49	9.90	1.59	11.1	1.81	12.3	2.03		
	23.0	6.28	1.03	7.49	1.21	8.70	1.41	9.30	1.52	9.90	1.62	11.1	1.88	12.3	2.16		
	25.0	6.28	1.04	7.49	1.24	8.70	1.47	9.30	1.59	9.90	1.73	11.1	2.00	12.3	2.31		
	27.0	6.28	1.08	7.49	1.31	8.70	1.56	9.30	1.70	9.90	1.84	11.1	2.14	12.3	2.46		
	29.0	6.28	1.15	7.49	1.39	8.70	1.66	9.30	1.81	9.90	1.96	11.1	2.28	12.3	2.62		
	31.0	6.28	1.21	7.49	1.47	8.70	1.76	9.30	1.92	9.90	2.08	11.1	2.43	12.3	2.80		
	33.0	6.28	1.28	7.49	1.56	8.70	1.87	9.30	2.04	9.90	2.21	11.1	2.58	12.3	2.98		
	35.0	6.28	1.36	7.49	1.66	8.70	1.99	9.30	2.16	9.90	2.35	11.1	2.74	12.3	3.17		
	37.0	6.28	1.43	7.49	1.75	8.70	2.11	9.30	2.30	9.90	2.50	11.1	2.92	12.3	3.37		
	39.0	6.28	1.51	7.49	1.86	8.70	2.23	9.30	2.44	9.90	2.65	11.1	3.10	12.3	3.59		
50	10.0	5.23	0.80	6.24	0.92	7.25	1.06	7.75	1.13	8.25	1.20	9.26	1.35	10.3	1.50		
	12.0	5.23	0.81	6.24	0.94	7.25	1.07	7.75	1.15	8.25	1.22	9.26	1.37	10.3	1.53		
	14.0	5.23	0.82	6.24	0.95	7.25	1.09	7.75	1.16	8.25	1.24	9.26	1.39	10.3	1.55		
	16.0	5.23	0.83	6.24	0.97	7.25	1.11	7.75	1.18	8.25	1.26	9.26	1.42	10.3	1.58		
	18.0	5.23	0.84	6.24	0.98	7.25	1.13	7.75	1.20	8.25	1.28	9.26	1.44	10.3	1.61		
	20.0	5.23	0.85	6.24	1.00	7.25	1.15	7.75	1.22	8.25	1.30	9.26	1.47	10.3	1.64		
	21.0	5.23	0.86	6.24	1.00	7.25	1.16	7.75	1.23	8.25	1.32	9.26	1.48	10.3	1.66		
	23.0	5.23	0.87	6.24	1.02	7.25	1.18	7.75	1.26	8.25	1.34	9.26	1.51	10.3	1.69		
	25.0	5.23	0.89	6.24	1.04	7.25	1.20	7.75	1.28	8.25	1.38	9.26	1.59	10.3	1.81		
	27.0	5.23	0.90	6.24	1.07	7.25	1.26	7.75	1.36	8.25	1.47	9.26	1.69	10.3	1.93		
	29.0	5.23	0.95	6.24	1.14	7.25	1.34	7.75	1.45	8.25	1.56	9.26	1.80	10.3	2.05		
	31.0	5.23	1.01	6.24	1.20	7.25	1.42	7.75	1.54	8.25	1.66	9.26	1.91	10.3	2.18		
	33.0	5.23	1.06	6.24	1.27	7.25	1.51	7.75	1.63	8.25	1.76	9.26	2.03	10.3	2.32		
	35.0	5.23	1.12	6.24	1.35	7.25	1.59	7.75	1.73	8.25	1.86	9.26	2.15	10.3	2.47		
	37.0	5.23	1.18	6.24	1.42	7.25	1.69	7.75	1.83	8.25	1.97	9.26	2.28	10.3	2.62		
	39.0	5.23	1.25	6.24	1.50	7.25	1.79	7.75	1.94	8.25	2.09	9.26	2.42	10.3	2.78		

TC Total capacity ; kW
PI Power Input ; kW(Comp.+Outdoor fan motor)

8.2 Heating Capacity

RXYMQ4PVE [50/60Hz]

Heating capacity

Combination (%) (Capacity index)	Outdoor air temp. °CDB	INDOOR AIR TEMP. °C 16.0 TC kW	16.0 PI kW	18.0 TC kW	18.0 PI kW	20.0 TC kW	20.0 PI kW	21.0 TC kW	21.0 PI kW	22.0 TC kW	22.0 PI kW	24.0 TC kW	24.0 PI kW
130	-19.8	-20.0	10.2	3.89	10.1	4.39	10.1	4.54	10.0	4.58	10.1	4.68	10.1	4.84	10.0	4.95	10.0	5.06	9.98	5.17
	-18.8	-19.0	10.5	3.97	10.4	4.51	10.4	4.64	10.3	4.68	10.4	4.80	10.4	4.97	10.3	5.09	10.3	5.20	10.3	5.31
	-16.7	-17.0	11.1	4.13	11.1	4.28	11.0	4.42	11.0	4.46	11.0	4.58	11.0	4.76	10.9	4.88	10.9	5.00	10.9	5.12
	-14.7	-15.0	11.7	4.27	11.7	4.41	11.7	4.54	11.6	4.58	11.6	4.70	11.6	4.87	11.5	5.00	11.5	5.12	11.5	5.24
	-12.6	-13.0	12.3	4.40	12.3	4.53	12.3	4.66	12.3	4.70	12.2	4.82	12.2	4.99	12.1	5.12	12.1	5.24	11.7	5.36
	-10.5	-11.0	12.9	4.51	12.9	4.64	12.9	4.76	12.9	4.82	12.8	4.93	12.8	5.11	12.7	5.24	12.7	5.36	12.3	5.48
	-9.5	-10.0	13.2	4.57	13.2	4.69	13.2	4.81	13.2	4.87	13.2	4.99	13.1	5.17	13.1	5.30	13.1	5.42	12.7	5.54
	-8.5	-9.1	13.5	4.61	13.5	4.73	13.5	4.85	13.4	4.91	13.4	5.03	13.4	5.21	13.3	5.34	13.3	5.46	13.0	5.58
	-7.0	-7.6	14.0	4.69	13.9	4.80	13.9	4.91	13.9	4.97	13.9	5.09	13.9	5.27	13.8	5.40	13.8	5.52	13.4	5.64
	-5.0	-5.6	14.6	4.78	14.6	4.89	14.5	5.00	14.5	5.05	14.5	5.17	14.4	5.35	14.4	5.48	14.3	5.60	14.0	5.72
	-3.0	-3.7	15.2	4.86	15.1	4.96	15.1	5.07	15.1	5.12	15.1	5.24	15.0	5.42	14.9	5.55	14.9	5.67	14.5	5.79
	0.0	-0.7	16.1	4.97	16.1	5.07	16.0	5.17	15.7	5.07	15.7	5.19	15.6	5.37	15.5	5.50	15.5	5.62	15.1	5.74
	3.0	2.2	17.0	5.07	16.9	5.16	16.3	4.93	15.7	4.72	15.2	4.84	15.2	5.02	15.1	5.15	15.1	5.27	14.7	5.39
	5.0	4.1	17.6	5.13	17.3	5.11	16.3	4.71	15.7	4.52	15.2	4.64	15.2	4.82	15.1	4.95	15.1	5.07	14.7	5.19
	7.0	6.0	18.1	5.19	17.3	4.90	16.3	4.52	15.7	4.34	15.2	4.46	15.2	4.64	15.1	4.77	15.1	4.89	14.7	5.01
	9.0	7.9	18.3	5.07	17.3	4.70	16.3	4.34	15.7	4.17	15.2	4.29	15.2	4.47	15.1	4.60	15.1	4.72	14.7	4.84
	11.0	9.8	18.3	4.87	17.3	4.52	16.3	4.18	15.7	4.01	15.2	4.13	15.2	4.31	15.1	4.44	15.1	4.56	14.7	4.68
	13.0	11.8	18.3	4.68	17.3	4.34	16.3	4.02	15.7	3.86	15.2	3.98	15.2	4.16	15.1	4.29	15.1	4.41	14.7	4.53
	15.0	13.7	18.3	4.51	17.3	4.19	16.3	3.87	15.7	3.72	15.2	3.84	15.2	4.02	15.1	4.15	15.1	4.27	14.7	4.39
120	-19.8	-20.0	10.1	4.10	10.1	4.25	10.1	4.39	10.1	4.46	10.1	4.54	10.0	4.68	10.0	4.79	10.0	4.90	9.96	5.02
	-18.8	-19.0	10.5	4.18	10.4	4.32	10.4	4.46	10.4	4.53	10.4	4.60	10.3	4.74	10.3	4.85	10.3	4.96	10.3	5.08
	-16.7	-17.0	11.1	4.33	11.0	4.46	11.0	4.59	11.0	4.66	11.0	4.72	11.0	4.86	10.9	4.98	10.9	5.09	10.9	5.21
	-14.7	-15.0	11.7	4.46	11.6	4.58	11.6	4.71	11.6	4.77	11.6	4.83	11.6	4.96	11.5	5.08	11.5	5.19	11.5	5.31
	-12.6	-13.0	12.3	4.57	12.3	4.69	12.2	4.81	12.2	4.87	12.2	4.93	12.2	5.05	12.1	5.17	12.1	5.28	12.1	5.40
	-10.5	-11.0	12.9	4.68	12.9	4.79	12.8	4.91	12.8	4.96	12.8	5.02	12.8	5.13	12.7	5.25	12.7	5.36	12.7	5.47
	-9.5	-10.0	13.2	4.73	13.2	4.84	13.1	4.95	13.1	5.01	13.1	5.06	13.1	5.16	13.1	5.28	13.0	5.39	13.0	5.50
	-8.5	-9.1	13.5	4.77	13.5	4.88	13.4	4.99	13.4	5.04	13.4	5.10	13.1	5.20	13.1	5.32	13.1	5.43	13.0	5.54
	-7.0	-7.6	13.9	4.84	13.9	4.95	13.9	5.05	13.9	5.10	13.9	5.16	13.1	5.26	13.1	5.38	13.1	5.49	13.0	5.60
	-5.0	-5.6	14.5	4.92	14.5	5.02	14.5	5.13	14.5	5.18	14.0	4.97	13.1	4.54	13.1	4.65	13.1	4.76	13.0	4.87
	-3.0	-3.7	15.1	5.00	15.1	5.09	15.0	5.15	14.5	4.93	14.0	4.72	13.1	4.32	13.1	4.43	13.1	4.54	13.0	4.65
	0.0	-0.7	16.0	5.10	16.0	5.17	15.0	4.77	14.5	4.57	14.0	4.38	13.1	4.09	13.1	4.20	13.1	4.31	13.0	4.42
	3.0	2.2	16.9	5.19	16.0	4.81	15.0	4.45	14.5	4.27	14.0	4.09	13.1	3.92	13.1	4.03	13.1	4.14	13.0	4.25
	5.0	4.1	16.9	4.97	16.0	4.61	15.0	4.26	14.5	4.09	14.0	3.92	13.1	3.76	13.1	3.87	13.1	3.98	13.0	4.09
	7.0	6.0	16.9	4.76	16.0	4.42	15.0	4.09	14.5	3.92	14.0	3.76	13.1	3.59	13.1	3.70	13.1	3.81	13.0	3.92
	9.0	7.9	16.9	4.57	16.0	4.24	15.0	3.93	14.5	3.77	14.0	3.62	13.1	3.45	13.1	3.54	13.1	3.64	13.0	3.75
	11.0	9.8	16.9	4.40	16.0	4.08	15.0	3.78	14.5	3.63	14.0	3.49	13.1	3.32	13.1	3.41	13.1	3.51	13.0	3.62
	13.0	11.8	16.9	4.23	16.0	3.93	15.0	3.64	14.5	3.50	14.0	3.36	13.1	3.20	13.1	3.29	13.1	3.39	13.0	3.49
	15.0	13.7	16.9	4.08	16.0	3.79	15.0	3.51	14.5	3.38	14.0	3.24	13.1	2.98	13.1	3.07	13.1	3.16	13.0	3.26
110	-19.8	-20.0	10.1	4.31	10.1	4.45	10.1	4.58	10.0	4.65	10.0	4.71	10.0	4.84	10.0	4.95	10.0	5.06	9.96	5.18
	-18.8	-19.0	10.4	4.39	10.4	4.51	10.4	4.64	10.4	4.71	10.3	4.77	10.3	4.90	10.3	5.01	10.3	5.12	10.3	5.24
	-16.7	-17.0	11.0	4.52	11.0	4.64	11.0	4.76	11.0	4.82	10.9	4.89	10.9	5.01	10.9	5.12	10.9	5.24	10.9	5.35
	-14.7	-15.0	11.6	4.64	11.6	4.76	11.6	4.87	11.6	4.93	11.6	4.99	11.5	5.10	11.5	5.22	11.5	5.33	11.5	5.45
	-12.6	-13.0	12.2	4.75	12.2	4.86	12.2	4.97	12.2	5.02	12.2	5.08	12.0	5.20	12.0	5.31	12.0	5.43	12.0	5.54
	-10.5	-11.0	12.9	4.85	12.8	4.95	12.8	5.05	12.8	5.11	12.8	5.16	12.0	5.29	12.0	5.40	12.0	5.52	12.0	5.63
	-9.5	-10.0	13.2	4.89	13.1	4.99	13.1	5.10	13.1	5.15	12.9	5.05	12.0	4.75	12.0	4.86	12.0	4.97	12.0	5.08
	-8.5	-9.1	13.4	4.93	13.4	5.03	13.4	5.13	13.3	5.14	12.9	4.92	12.0	4.61	12.0	4.72	12.0	4.83	12.0	4.94
	-7.0	-7.6	13.9	4.99	13.9	5.09	13.8	5.13	13.8	5.10	13.3	4.91	12.0	4.59	12.0	4.70	12.0	4.81	12.0	4.92
	-5.0	-5.6	14.5	5.07	14.5	5.16	13.8	4.84	13.8	4.60	13.3	4.41	12.0	4.23	12.0	4.34	12.0	4.45	12.0	4.56
	-3.0	-3.7	15.1	5.14	14.6	4.99	13.8	4.62	13.8	4.27	13.3	4.09	12.9	3.93	12.0	4.03	12.0	4.14	12.0	4.25
	0.0	-0.7	15.5	4.98	14.6	4.62	13.8	4.27	13.3	4.09	12.9	3.93	12.0	3.67	12.0	3.77	12.0	3.88	12.0	3.98
	3.0	2.2	15.5	4.64	14.6	4.31	13.8	3.98	13.3	3.82	12.9	3.67	12.0	3.52	12.0	3.62	12.0	3.73	12.0	3.83
	5.0	4.1	15.5	4.44	14.6	4.13	13.8	3.82	13.3	3.67	12.9	3.52	12.0	3.39	12.0	3.49	12.0	3.60	12.0	3.70
	7.0	6.0	15.5	4.26	14.6	3.96	13.8	3.67	13.3	3.53	12.9	3.39	12.0	3.26	12.0	3.36	12.0	3.46	12.0	3.57
	9.0	7.9	15.5	4.10	14.6	3.81	13.8	3.53	13.3	3.40	12.9	3.27	12.0	3.14	12.0	3.24	12.0	3.33	12.0	3.43
	11.0	9.8	15.5	3.94	14.6	3.67	13.8	3.40	13.3	3.27	12.9	3.14	12.0	3.03	12.0	3.12	12.0	3.21	12.0	3.31
	13.0	11.8	15.5	3.79	14.6	3.53	13.8	3.28	13.3	3.15	12.9	3.03	12.0	2.93	12.0	3.01	12.0	3.10	12.0	3.19
	15.0	13.7	15.5	3.66	14.6	3.41	13.8	3.16	13.3	3.04	12.9	2.93	12.0	2.82	12.0	2.90	12.0	2.98	12.0	3.07

Heating capacity

Combination (%) (Capacity index)	Outdoor air temp. °CDB	INDOOR AIR TEMP. °C 16.0 TC kW	16.0 PI kW	18.0 TC kW	18.0 PI kW	20.0 TC kW	20.0 PI kW	21.0 TC kW	21.0 PI kW	22.0 TC kW	22.0 PI kW	24.0 TC kW	24.0 PI kW
100	-19.8	-20.0	10.1	4.53	10.0	4.65	10.0	4.77	10.0	4.83	10.0	4.96	9.98	5.01
	-18.8	-19.0	10.4	4.59	10.4	4.71	10.3	4.83	10.3	4.88	10.3	4.94	10.3	5.06
	-16.7	-17.0	11.0	4.71	11.0	4.82	10.9	4.94	10.9	4.99	10.9	5.05	10.9	5.15
	-14.7	-15.0	11.6	4.82	11.6	4.93	11.6	5.03	11.5	5.09	11.5	5.14	10.9	4.80
	-12.6	-13.0	12.2	4.92	12.2	5.02	12.2	5.12	12.1	5.13	11.7	4.91	10.9	4.48
	-10.5	-11.0	12.8	5.01	12.8	5.11	12.5	5.02	12.1	4.81	11.7	4.61	10.9	4.21
	-9.5	-10.0	13.1	5.05	13.1	5.15	12.5	4.87	12.1	4.67	11.7	4.47	10.9	4.09
	-8.5	-9.1	13.4	5.09	13.3	5.13	12.5	4.74	12.1	4.54	11.7	4.35	10.9	3.98
	-7.0	-7.6	13.9	5.15	13.3	4.91	12.5	4.53	12.1	4.35	11.7	4.17	10.9	3.81
	-5.0	-5.6	14.1	5.01	13.3	4.64	12.5	4.29	12.1	4.12	11.7	3.95	10.9	3.62
	-3.0	-3.7	14.1	4.76	13.3	4.41	12.5	4.08	12.1	3.92	11.7	3.76	10.9	3.44
	0.0	-0.7	14.1	4.41	13.3	4.09	12.5	3.79	12.1	3.64	11.7	3.49	10.9	3.21
	3.0	2.2	14.1	4.11	13.3	3.83	12.5	3.54	12.1	3.41	11.7	3.27	10.9	3.01
	5.0	4.1	14.1	3.94	13.3	3.67	12.5	3.40	12.1	3.27	11.7	3.14	10.9	2.89
	7.0	6.0	14.1	3.79	13.3	3.52	12.5	3.27	12.1	3.15	11.7	3.02	10.9	2.78
	9.0	7.9	14.1	3.64	13.3	3.39	12.5	3.15	12.1	3.03	11.7	2.91	10.9	2.68
	11.0	9.8	14.1	3.51	13.3	3.27	12.5	3.04	12.1	2.92	11.7	2.81	10.9	2.59
	13.0	11.8	14.1	3.38	13.3	3.15	12.5	2.93	12.1	2.82	11.7	2.71	10.9	2.50
	15.0	13.7	14.1	3.26	13.3	3.04	12.5	2.83	12.1	2.73	11.7	2.62	10.9	2.42
90	-19.8	-20.0	10.0	4.74	10.0	4.85	9.99	4.96	9.98	5.01	9.97	5.06	9.80	5.05
	-18.8	-19.0	10.3	4.80	10.3	4.90	10.3	5.01	10.3	5.06	10.3	5.11	9.80	4.85
	-16.7	-17.0	10.9	4.91	10.9	5.01	10.9	5.11	10.9	5.15	10.5	4.93	9.80	4.50
	-14.7	-15.0	11.6	5.01	11.5	5.10	11.3	5.00	10.9	4.79	10.5	4.59	9.80	4.19
	-12.6	-13.0	12.2	5.10	12.0	5.06	11.3	4.67	10.9	4.48	10.5	4.29	9.80	3.93
	-10.5	-11.0	12.7	5.12	12.0	4.75	11.3	4.39	10.9	4.21	10.5	4.03	9.80	3.69
	-9.5	-10.0	12.7	4.97	12.0	4.60	11.3	4.25	10.9	4.08	10.5	3.92	9.80	3.59
	-8.5	-9.1	12.7	4.83	12.0	4.48	11.3	4.14	10.9	3.98	10.5	3.81	9.80	3.50
	-7.0	-7.6	12.7	4.62	12.0	4.29	11.3	3.97	10.9	3.81	10.5	3.66	9.80	3.36
	-5.0	-5.6	12.7	4.37	12.0	4.06	11.3	3.76	10.9	3.61	10.5	3.47	9.80	3.18
	-3.0	-3.7	12.7	4.16	12.0	3.87	11.3	3.58	10.9	3.44	10.5	3.31	9.80	3.04
	0.0	-0.7	12.7	3.86	12.0	3.58	11.3	3.33	10.9	3.21	10.5	3.08	9.80	2.83
	3.0	2.2	12.7	3.61	12.0	3.36	11.3	3.12	10.9	3.01	10.5	2.89	9.80	2.66
	5.0	4.1	12.7	3.47	12.0	3.23	11.3	3.00	10.9	2.89	10.5	2.78	9.80	2.56
	7.0	6.0	12.7	3.33	12.0	3.11	11.3	2.89	10.9	2.78	10.5	2.67	9.80	2.47
	9.0	7.9	12.7	3.21	12.0	2.99	11.3	2.78	10.9	2.68	10.5	2.58	9.80	2.38
	11.0	9.8	12.7	3.09	12.0	2.89	11.3	2.69	10.9	2.59	10.5	2.49	9.80	2.30
	13.0	11.8	12.7	2.98	12.0	2.78	11.3	2.59	10.9	2.50	10.5	2.41	9.80	2.22
	15.0	13.7	12.7	2.88	12.0	2.69	11.3	2.51	10.9	2.42	10.5	2.33	9.80	2.15
80	-19.8	-20.0	9.99	4.95	9.97	5.05	9.96	5.14	9.96	4.96	9.36	4.75	8.71	4.34
	-18.8	-19.0	10.3	5.00	10.3	5.10	10.0	4.98	9.68	4.77	9.36	4.57	8.71	4.18
	-16.7	-17.0	10.9	5.02	10.6	5.00	10.0	4.61	9.68	4.43	9.36	4.24	8.71	3.88
	-14.7	-15.0	11.3	4.69	10.6	4.65	10.0	4.30	9.68	4.13	9.36	3.96	8.71	3.62
	-12.6	-13.0	11.3	4.40	10.6	4.35	10.0	4.03	9.68	3.87	9.36	3.71	8.71	3.40
	-10.5	-11.0	11.3	4.40	10.6	4.09	10.0	3.78	9.68	3.64	9.36	3.49	8.71	3.20
	-9.5	-10.0	11.3	4.27	10.6	3.97	10.0	3.68	9.68	3.53	9.36	3.39	8.71	3.11
	-8.5	-9.1	11.3	4.16	10.6	3.87	10.0	3.58	9.68	3.44	9.36	3.31	8.71	3.04
	-7.0	-7.6	11.3	3.99	10.6	3.71	10.0	3.44	9.68	3.30	9.36	3.17	8.71	2.92
	-5.0	-5.6	11.3	3.78	10.6	3.51	10.0	3.26	9.68	3.14	9.36	3.01	8.71	2.77
	-3.0	-3.7	11.3	3.60	10.6	3.35	10.0	3.11	9.68	2.99	9.36	2.88	8.71	2.65
	0.0	-0.7	11.3	3.35	10.6	3.12	10.0	2.90	9.68	2.79	9.36	2.69	8.71	2.48
	3.0	2.2	11.3	3.14	10.6	2.93	10.0	2.72	9.68	2.62	9.36	2.52	8.71	2.33
	5.0	4.1	11.3	3.01	10.6	2.81	10.0	2.62	9.68	2.52	9.36	2.43	8.71	2.25
	7.0	6.0	11.3	2.90	10.6	2.71	10.0	2.52	9.68	2.43	9.36	2.34	8.71	2.17
	9.0	7.9	11.3	2.79	10.6	2.61	10.0	2.43	9.68	2.35	9.36	2.26	8.71	2.09
	11.0	9.8	11.3	2.70	10.6	2.52	10.0	2.35	9.68	2.27	9.36	2.19	8.71	2.02
	13.0	11.8	11.3	2.60	10.6	2.44	10.0	2.27	9.68	2.19	9.36	2.11	8.71	1.96
	15.0	13.7	11.3	2.52	10.6	2.36	10.0	2.20	9.68	2.12	9.36	2.05	8.71	1.90

TC Total capacity ; kW
PI Power Input ; kW(Comp.+Outdoor fan motor)

[50/60Hz]

Heating capacity

Combination (%) (Capacity index)	Outdoor air temp. °CDB	INDOOR AIR TEMP. :°C 16.0 TC kW	16.0 PI kW	18.0 TC kW	18.0 PI kW	20.0 TC kW	20.0 PI kW	21.0 TC kW	21.0 PI kW	22.0 TC kW	22.0 PI kW	24.0 TC kW	24.0 PI kW
70	-19.8	9.87	5.10	9.31	4.72	8.75	4.36	8.47	4.19	8.19	4.01	7.63	3.68
	-18.8	9.87	4.90	9.31	4.54	8.75	4.20	8.47	4.03	8.19	3.86	7.63	3.54
	-16.7	9.87	4.54	9.31	4.21	8.75	3.90	8.47	3.75	8.19	3.59	7.63	3.30
	-14.7	9.87	4.23	9.31	3.93	8.75	3.64	8.47	3.50	8.19	3.36	7.63	3.09
	-12.6	9.87	3.96	9.31	3.69	8.75	3.42	8.47	3.29	8.19	3.16	7.63	2.90
	-10.5	9.87	3.73	9.31	3.47	8.75	3.22	8.47	3.10	8.19	2.98	7.63	2.74
	-9.5	9.87	3.62	9.31	3.37	8.75	3.13	8.47	3.01	8.19	2.89	7.63	2.67
	-8.5	9.87	3.53	9.31	3.29	8.75	3.05	8.47	2.94	8.19	2.82	7.63	2.60
	-7.0	9.87	3.38	9.31	3.16	8.75	2.93	8.47	2.82	8.19	2.71	7.63	2.50
	-5.0	9.87	3.21	9.31	3.00	8.75	2.79	8.47	2.68	8.19	2.58	7.63	2.38
	-3.0	9.87	3.06	9.31	2.86	8.75	2.66	8.47	2.56	8.19	2.47	7.63	2.28
	0.0	9.87	2.86	9.31	2.67	8.75	2.49	8.47	2.40	8.19	2.31	7.63	2.14
	3.0	9.87	2.68	9.31	2.51	8.75	2.34	8.47	2.26	8.19	2.18	7.63	2.02
	5.0	9.87	2.58	9.31	2.42	8.75	2.26	8.47	2.18	8.19	2.10	7.63	1.94
	7.0	9.87	2.49	9.31	2.33	8.75	2.18	8.47	2.10	8.19	2.02	7.63	1.88
	9.0	9.87	2.40	9.31	2.25	8.75	2.10	8.47	2.03	8.19	1.96	7.63	1.82
	11.0	9.87	2.32	9.31	2.18	8.75	2.03	8.47	1.96	8.19	1.89	7.63	1.76
	13.0	9.87	2.24	9.31	2.10	8.75	1.97	8.47	1.90	8.19	1.83	7.63	1.70
	15.0	9.87	2.17	9.31	2.04	8.75	1.91	8.47	1.84	8.19	1.78	7.63	1.65
60	-19.8	8.46	4.18	7.98	3.89	7.50	3.60	7.26	3.46	7.02	3.32	6.54	3.05
	-18.8	8.46	4.03	7.98	3.74	7.50	3.47	7.26	3.34	7.02	3.20	6.54	2.94
	-16.7	8.46	3.74	7.98	3.48	7.50	3.23	7.26	3.11	7.02	2.99	6.54	2.75
	-14.7	8.46	3.50	7.98	3.26	7.50	3.03	7.26	2.91	7.02	2.80	6.54	2.58
	-12.6	8.46	3.28	7.98	3.06	7.50	2.85	7.26	2.74	7.02	2.64	6.54	2.43
	-11.0	8.46	3.09	7.98	2.89	7.50	2.69	7.26	2.59	7.02	2.49	6.54	2.30
	-9.5	8.46	3.01	7.98	2.81	7.50	2.62	7.26	2.52	7.02	2.43	6.54	2.24
	-8.5	8.46	2.93	7.98	2.74	7.50	2.55	7.26	2.46	7.02	2.37	6.54	2.19
	-7.0	8.46	2.82	7.98	2.64	7.50	2.46	7.26	2.37	7.02	2.28	6.54	2.11
	-5.0	8.46	2.68	7.98	2.51	7.50	2.34	7.26	2.26	7.02	2.17	6.54	2.01
	-3.0	8.46	2.56	7.98	2.40	7.50	2.24	7.26	2.16	7.02	2.08	6.54	1.93
	0.0	8.46	2.40	7.98	2.25	7.50	2.10	7.26	2.03	7.02	1.95	6.54	1.81
	3.0	8.46	2.26	7.98	2.12	7.50	1.98	7.26	1.91	7.02	1.85	6.54	1.71
	5.0	8.46	2.17	7.98	2.04	7.50	1.91	7.26	1.85	7.02	1.78	6.54	1.66
	7.0	8.46	2.10	7.98	1.97	7.50	1.85	7.26	1.78	7.02	1.72	6.54	1.60
	9.0	8.46	2.03	7.98	1.91	7.50	1.79	7.26	1.73	7.02	1.67	6.54	1.55
	11.0	8.46	1.96	7.98	1.84	7.50	1.73	7.26	1.67	7.02	1.62	6.54	1.51
	13.0	8.46	1.90	7.98	1.79	7.50	1.68	7.26	1.62	7.02	1.57	6.54	1.46
	15.0	8.46	1.84	7.98	1.73	7.50	1.63	7.26	1.57	7.02	1.52	6.54	1.42
50	-19.8	7.05	3.34	6.65	3.12	6.25	2.90	6.05	2.79	5.85	2.68	5.45	2.47
	-18.8	7.05	3.22	6.65	3.01	6.25	2.80	6.05	2.69	5.85	2.59	5.45	2.39
	-16.7	7.05	3.01	6.65	2.81	6.25	2.61	6.05	2.52	5.85	2.42	5.45	2.24
	-14.7	7.05	2.82	6.65	2.63	6.25	2.45	6.05	2.37	5.85	2.28	5.45	2.11
	-12.6	7.05	2.65	6.65	2.48	6.25	2.31	6.05	2.23	5.85	2.15	5.45	1.99
	-10.5	7.05	2.51	6.65	2.35	6.25	2.19	6.05	2.11	5.85	2.04	5.45	1.89
	-9.5	7.05	2.44	6.65	2.29	6.25	2.13	6.05	2.06	5.85	1.99	5.45	1.84
	-8.5	7.05	2.38	6.65	2.23	6.25	2.09	6.05	2.01	5.85	1.94	5.45	1.80
	-7.0	7.05	2.29	6.65	2.15	6.25	2.01	6.05	1.94	5.85	1.87	5.45	1.74
	-5.0	7.05	2.19	6.65	2.05	6.25	1.92	6.05	1.86	5.85	1.79	5.45	1.66
	-3.0	7.05	2.09	6.65	1.97	6.25	1.84	6.05	1.78	5.85	1.72	5.45	1.60
	0.0	7.05	1.96	6.65	1.85	6.25	1.73	6.05	1.67	5.85	1.62	5.45	1.51
	3.0	7.05	1.86	6.65	1.75	6.25	1.64	6.05	1.59	5.85	1.53	5.45	1.43
	5.0	7.05	1.79	6.65	1.69	6.25	1.58	6.05	1.53	5.85	1.48	5.45	1.38
	7.0	7.05	1.73	6.65	1.63	6.25	1.53	6.05	1.48	5.85	1.44	5.45	1.34
	9.0	7.05	1.68	6.65	1.58	6.25	1.48	6.05	1.44	5.85	1.39	5.45	1.30
	11.0	7.05	1.62	6.65	1.53	6.25	1.44	6.05	1.40	5.85	1.35	5.45	1.26
	13.0	7.05	1.57	6.65	1.49	6.25	1.40	6.05	1.35	5.85	1.31	5.45	1.23
	15.0	7.05	1.53	6.65	1.44	6.25	1.36	6.05	1.32	5.85	1.28	5.45	1.20

TC Total capacity ; kW
PI Power Input ; kW(Comp.+Outdoor fan motor)

12

RXYMQ5PVE [50/60Hz]

Heating capacity

Combination (%) (Capacity index)	Outdoor air temp. °CDB	INDOOR AIR TEMP. °C 16.0 TC kW	16.0 PI kW	18.0 TC kW	18.0 PI kW	20.0 TC kW	20.0 PI kW	21.0 TC kW	21.0 PI kW	22.0 TC kW	22.0 PI kW	24.0 TC kW	24.0 PI kW
130	-19.8	20.0	11.1	3.29	11.0	3.48	11.0	3.68	11.0	3.78	11.0	3.88	10.9	4.07
	-18.8	-19.0	11.4	3.40	11.4	3.59	11.3	3.78	11.3	3.87	11.3	3.97	11.3	4.16
	-16.7	-17.0	12.1	3.59	12.0	3.77	12.0	3.95	12.0	4.04	11.9	4.13	11.9	4.31
	-14.7	-15.0	12.7	3.77	12.7	3.94	12.6	4.11	12.6	4.19	12.6	4.28	12.6	4.45
	-12.6	-13.0	13.4	3.92	13.3	4.09	13.3	4.25	13.3	4.33	13.3	4.41	13.2	4.57
	-10.5	-11.0	14.0	4.07	14.0	4.22	14.0	4.37	13.9	4.45	13.9	4.53	13.9	4.68
	-9.5	-10.0	14.4	4.13	14.3	4.28	14.3	4.43	14.3	4.51	14.3	4.58	14.2	4.73
	-8.5	-9.1	14.7	4.19	14.6	4.34	14.6	4.48	14.6	4.56	14.5	4.63	14.5	4.78
	-7.0	-7.6	15.2	4.28	15.1	4.42	15.1	4.56	15.1	4.64	15.0	4.71	15.0	4.85
	-5.0	-5.6	15.8	4.39	15.8	4.53	15.7	4.66	15.7	4.73	15.7	4.80	15.7	4.94
	-3.0	-3.7	16.4	4.49	16.4	4.62	16.4	4.75	16.3	4.82	16.3	4.88	16.3	5.01
	0.0	-0.7	17.4	4.63	17.4	4.75	17.3	4.88	17.3	4.94	17.3	5.00	17.3	5.12
	3.0	2.2	18.4	4.75	18.3	4.87	18.3	4.99	18.3	5.04	18.3	5.10	18.1	5.17
	5.0	4.1	19.0	4.83	19.0	4.94	18.9	5.05	18.9	5.11	18.9	5.16	18.1	4.96
	7.0	6.0	19.6	4.89	19.6	5.00	19.6	5.11	19.5	5.17	19.5	5.20	18.1	4.76
	9.0	7.9	20.3	4.96	20.2	5.07	20.2	5.17	20.1	5.21	19.5	5.20	18.1	4.58
	11.0	9.8	20.9	5.02	20.8	5.12	20.8	5.22	20.1	5.01	19.5	4.81	18.1	4.41
	13.0	11.8	21.5	5.08	21.5	5.18	20.8	5.02	20.1	4.82	19.5	4.63	18.1	4.24
	15.0	13.7	22.2	5.14	22.1	5.23	20.8	4.85	20.1	4.65	19.5	4.47	18.1	4.10
120	-19.8	20.0	11.0	3.55	11.0	3.74	11.0	3.92	10.9	4.01	10.9	4.10	10.9	4.28
	-18.8	-19.0	11.3	3.65	11.3	3.83	11.3	4.00	11.3	4.09	11.2	4.18	11.2	4.36
	-16.7	-17.0	12.0	3.83	12.0	4.00	11.9	4.17	11.9	4.25	11.9	4.33	11.9	4.50
	-14.7	-15.0	12.7	4.00	12.6	4.15	12.6	4.31	12.6	4.39	12.6	4.47	12.5	4.62
	-12.6	-13.0	13.3	4.14	13.3	4.29	13.3	4.44	13.2	4.51	13.2	4.59	13.2	4.74
	-10.5	-11.0	14.0	4.27	13.9	4.42	13.9	4.56	13.9	4.63	13.9	4.70	13.8	4.84
	-9.5	-10.0	14.3	4.34	14.3	4.47	14.2	4.61	14.2	4.68	14.2	4.75	14.2	4.89
	-8.5	-9.1	14.6	4.39	14.6	4.52	14.5	4.66	14.5	4.73	14.5	4.80	14.5	4.93
	-7.0	-7.6	15.1	4.47	15.1	4.60	15.0	4.73	15.0	4.80	15.0	4.87	15.0	5.00
	-5.0	-5.6	15.8	4.58	15.7	4.70	15.7	4.83	15.7	4.89	15.7	4.95	15.6	5.08
	-3.0	-3.7	16.4	4.67	16.4	4.79	16.3	4.91	16.3	4.97	16.3	5.03	16.3	5.15
	0.0	-0.7	17.4	4.80	17.3	4.91	17.3	5.02	17.3	5.08	17.3	5.14	16.7	5.01
	3.0	2.2	18.3	4.91	18.3	5.02	18.2	5.13	18.2	5.18	18.0	5.11	16.7	4.68
	5.0	4.1	19.0	4.98	18.9	5.08	18.9	5.19	18.6	5.11	18.0	4.90	16.7	4.49
	7.0	6.0	19.6	5.04	19.5	5.14	19.2	5.11	18.6	4.91	18.0	4.71	16.7	4.32
	9.0	7.9	20.2	5.10	20.2	5.20	19.2	4.91	18.6	4.72	18.0	4.53	16.7	4.15
	11.0	9.8	20.8	5.16	20.4	5.11	19.2	4.73	18.6	4.54	18.0	4.36	16.7	4.00
	13.0	11.8	21.5	5.22	20.4	4.91	19.2	4.55	18.6	4.37	18.0	4.20	16.7	3.86
	15.0	13.7	21.7	5.10	20.4	4.74	19.2	4.39	18.6	4.22	18.0	4.06	16.7	3.73
110	-19.8	20.0	11.0	3.82	10.9	3.99	10.9	4.15	10.9	4.24	10.9	4.32	10.8	4.48
	-18.8	-19.0	11.3	3.91	11.3	4.07	11.2	4.23	11.2	4.31	11.2	4.39	11.2	4.56
	-16.7	-17.0	12.0	4.08	11.9	4.23	11.9	4.38	11.9	4.46	11.9	4.53	11.8	4.69
	-14.7	-15.0	12.6	4.23	12.6	4.37	12.6	4.51	12.5	4.59	12.5	4.66	12.5	4.80
	-12.6	-13.0	13.3	4.36	13.2	4.50	13.2	4.63	13.2	4.70	13.2	4.77	13.2	4.91
	-10.5	-11.0	13.9	4.48	13.9	4.61	13.9	4.74	13.9	4.81	13.8	4.87	13.6	5.00
	-9.5	-10.0	14.3	4.54	14.2	4.67	14.2	4.79	14.2	4.86	14.2	4.92	14.1	5.05
	-8.5	-9.1	14.6	4.59	14.5	4.71	14.5	4.84	14.5	4.90	14.5	4.96	14.4	5.08
	-7.0	-7.6	15.1	4.66	15.0	4.78	15.0	4.90	15.0	4.96	15.0	5.02	14.9	5.14
	-5.0	-5.6	15.7	4.76	15.7	4.87	15.6	4.99	15.6	5.05	15.6	5.10	15.3	5.09
	-3.0	-3.7	16.3	4.84	16.3	4.95	16.3	5.06	16.3	5.12	16.2	5.17	15.3	4.84
	0.0	-0.7	17.3	4.96	17.3	5.07	17.3	5.17	17.0	5.12	16.5	4.91	15.3	4.50
	3.0	2.2	18.3	5.07	18.2	5.17	17.6	4.98	17.0	4.79	16.5	4.59	15.3	4.21
	5.0	4.1	18.9	5.13	18.7	5.16	17.6	4.78	17.0	4.59	16.5	4.41	15.3	4.04
	7.0	6.0	19.5	5.19	18.7	4.96	17.6	4.59	17.0	4.41	16.5	4.23	15.3	3.89
	9.0	7.9	19.9	5.12	18.7	4.76	17.6	4.41	17.0	4.24	16.5	4.08	15.3	3.75
	11.0	9.8	19.9	4.93	18.7	4.59	17.6	4.25	17.0	4.09	16.5	3.93	15.3	3.61
	13.0	11.8	19.9	4.74	18.7	4.42	17.6	4.10	17.0	3.94	16.5	3.79	15.3	3.49
	15.0	13.7	19.9	4.58	18.7	4.26	17.6	3.96	17.0	3.81	16.5	3.66	15.3	3.37

Heating capacity

Combination (%) (Capacity index)	Outdoor air temp. °CDB	INDOOR AIR TEMP. °C 16.0 TC kW	16.0 PI kW	18.0 TC kW	18.0 PI kW	20.0 TC kW	20.0 PI kW	21.0 TC kW	21.0 PI kW	22.0 TC kW	22.0 PI kW	24.0 TC kW	24.0 PI kW
100	-19.8	20.0	10.9	4.09	10.9	4.24	10.9	4.39	10.9	4.46	10.8	4.54	10.8	4.69
	-18.8	-19.0	11.3	4.17	11.2	4.31	11.2	4.46	11.2	4.53	11.2	4.61	11.1	4.75
	-16.7	-17.0	11.9	4.32	11.9	4.46	11.9	4.60	11.8	4.67	11.8	4.73	11.8	4.87
	-14.7	-15.0	12.6	4.46	12.5	4.59	12.5	4.72	12.5	4.78	12.5	4.85	12.5	4.98
	-12.6	-13.0	13.2	4.58	13.2	4.70	13.2	4.83	13.2	4.89	13.1	4.95	13.1	5.08
	-10.5	-11.0	13.9	4.69	13.9	4.81	13.8	4.93	13.8	4.98	13.8	5.04	13.8	5.16
	-9.5	-10.0	14.2	4.74	14.2	4.86	14.2	4.97	14.1	5.03	14.1	5.09	13.9	5.11
	-8.5	-9.1	14.5	4.79	14.5	4.90	14.5	5.01	14.4	5.07	14.4	5.12	13.9	4.98
	-7.0	-7.6	15.0	4.86	15.0	4.97	14.9	5.07	14.9	5.13	14.9	5.18	13.9	4.77
	-5.0	-5.6	15.6	4.94	15.6	5.05	15.6	5.15	15.5	5.15	15.5	5.15	15.0	4.94
	-3.0	-3.7	16.3	5.02	16.3	5.12	16.0	5.10	15.5	4.90	15.5	4.90	15.0	4.70
	0.0	-0.7	17.3	5.13	17.0	5.12	16.0	4.74	15.5	4.55	15.5	4.55	15.0	4.37
	3.0	2.2	18.1	5.15	17.0	4.78	16.0	4.43	15.5	4.26	15.5	4.26	15.0	4.09
	5.0	4.1	18.1	4.93	17.0	4.59	16.0	4.09	15.5	3.93	15.5	4.09	15.0	3.93
	7.0	6.0	18.1	4.74	17.0	4.41	16.0	3.94	15.5	3.79	15.5	3.79	15.0	3.78
	9.0	7.9	18.1	4.55	17.0	4.24	16.0	3.94	15.5	3.79	15.5	3.65	15.0	3.64
	11.0	9.8	18.1	4.39	17.0	4.09	16.0	3.80	15.5	3.65	15.5	3.51	15.0	3.51
	13.0	11.8	18.1	4.22	17.0	3.94	16.0	3.66	15.5	3.52	15.5	3.39	15.0	3.39
	15.0	13.7	18.1	4.08	17.0	3.81	16.0	3.54	15.5	3.41	15.5	3.28	15.0	3.28
90	-19.8	20.0	10.8	4.49	10.8	4.64	10.8	4.62	10.8	4.69	10.8	4.76	10.8	4.90
	-18.8	-19.0	11.2	4.43	11.2	4.56	11.2	4.69	11.1	4.76	11.1	4.82	11.1	4.95
	-16.7	-17.0	11.8	4.56	11.8	4.69	11.8	4.81	11.8	4.87	11.8	4.94	11.8	5.06
	-14.7	-15.0	12.5	4.69	12.5	4.80	12.5	4.92	12.5	4.98	12.4	5.04	12.4	5.16
	-12.6	-13.0	13.2	4.80	13.1	4.91	13.1	5.02	13.1	5.08	13.1	5.13	12.5	4.91
	-10.5	-11.0	13.8	5.00	13.8	5.11	13.8	5.13	13.8	5.16	13.8	5.16	12.5	4.62
	-9.5	-10.0	14.2	4.94	14.1	5.05	14.1	5.15	13.9	5.11	13.5	4.90	12.5	4.49
	-8.5	-9.1	14.5	4.98	14.4	5.09	14.4	5.18	13.9	4.97	13.5	4.77	12.5	4.37
	-7.0	-7.6	15.0	5.05	14.9	5.15	14.4	4.97	13.9	4.77	13.5	4.58	12.5	4.20
	-5.0	-5.6	15.3	5.13	15.3	5.08	14.4	4.70	13.9	4.52	13.5	4.34	12.5	3.98
	-3.0	-3.7	15.3	5.20	15.3	4.84	14.4	4.48	13.9	4.31	13.5	4.13	12.5	3.80
	0.0	-0.7	15.3	4.52	15.3	4.83	14.4	4.17	13.9	4.01	13.5	3.85	12.5	3.54
	3.0	2.2	15.3	4.52	15.3	4.83	14.4	4.21	13.9	4.01	13.5	3.85	12.5	3.54
	5.0	4.1	15.3	4.49	15.3	4.83	14.4	4.17	13.9	4.01	13.5	3.85	12.5	3.54
	7.0	6.0	15.3	4.52	15.3	4.80	14.4	4.21	13.9	4.01	13.5	3.85	12.5	3.54
	9.0	7.9	15.3	4.52	15.3	4.80	14.4	4.21	13.9	4.01	13.5	3.85	12.5	3.54
	11.0	9.8	15.3	4.52	15.3	4.80	14.4	4.21	13.9	4.01	13.5	3.85	12.5	3.54
	13.0	11.8	15.3	4.52	15.3	4.80	14.4	4.21	13.9	4.01	13.5	3.85	12.5	3.54
	15.0	13.7	15.3	4.52	15.3	4.80	14.4	4.21	13.9	4.01	13.5	3.85	12.5	3.54
80	-19.8	20.0	10.8	4.62	10.8	4.74	10.8	4.86	10.8	4.92	10.8	4.98	10.7	5.10
	-18.8	-19.0	11.2	4.68	11.1	4.80	11.1	4.92	11.1	4.98	11.1	5.04	11.1	5.15
	-16.7	-17.0	11.8	4.81	11.8	4.92	11.8	5.03	11.8	5.08	11.7	5.14	11.2	4.85
	-14.7	-15.0	12.5	4.92	12.4	5.02	12.4	5.13	12.4	5.16	12.0	4.95	11.2	4.53
	-12.6	-13.0	13.1	5.01	13.1	5.11	12.8	5.04	12.4	4.84	12.0	4.64	11.2	4.25
	-10.5	-11.0	13.8	5.10	13.6	5.11	12.8	4.73	12.4	4.55	12.0	4.36	11.2	4.01
	-9.5	-10.0	14.1	5.15	13.6	4.96	12.8	4.60	12.4	4.42	12.0	4.24	11.2	3.89
	-8.5	-9.1	14.4	5.18	13.6	4.84	12.8	4.48	12.4	4.31	12.0	4.13	11.2	3.80
	-7.0	-7.6	14.4	4.98	13.6	4.64	12.8	4.30	12.4	4.13	12.0	3.97	11.2	3.65
	-5.0	-5.6	14.4	4.72	13.6	4.40	12.8	4.08	12.4	3.92	12.0	3.77	11.2	3.47
	-3.0	-3.7	14.4	4.50	13.6	4.19	12.8	3.89	12.4	3.74	12.0	3.60	11.2	3.31
	0.0	-0.7	14.4	4.18	13.6	3.90	12.8	3.63	12.4	3.49	12.0	3.36	11.2	3.10
	3.0	2.2	14.4	3.92	13.6	3.66	12.8	3.41	12.4	3.28	12.0	3.16	11.2	2.92
	5.0	4.1	14.4	3.77	13.6	3.52	12.8	3.28	12.4	3.16	12.0	3.04	11.2	2.81
	7.0	6.0	14.4	3.63	13.6	3.39	12.8	3.16	12.4	3.04	12.0	2.93	11.2	2.71
	9.0	7.9	14.4	3.49	13.6	3.27	12.8	3.04	12.4	2.94	12.0	2.83	11.2	2.62
	11.0	9.8	14.4	3.37	13.6	3.15	12.8	2.94	12.4	2.84	12.0	2.73	11.2	2.53
	13.0	11.8	14.4	3.25	13.6	3.05	12.8	2.84	12.4	2.74	12.0	2.64	11.2	2.45
	15.0	13.7	14.4	3.15	13.6	2.95	12.8	2.75	12.4	2.66	12.0	2.56	11.2	2.38

TC Total capacity ; kW
PI Power Input ; kW(Comp.+Outdoor fan motor)

[50/60Hz]

Heating capacity

Combination (%) (Capacity index)	Outdoor air temp. °CDB	INDOOR AIR TEMP. :°C 16.0 TC kW	16.0 PI kW	18.0 TC kW	18.0 PI kW	20.0 TC kW	20.0 PI kW	21.0 TC kW	21.0 PI kW	22.0 TC kW	22.0 PI kW	24.0 TC kW	24.0 PI kW
70	-19.8	10.8	4.88	10.8	4.99	10.7	5.09	10.7	5.15	10.5	5.02	9.76	4.60
	-18.8	11.1	4.94	11.1	5.04	11.1	5.15	10.8	5.04	10.5	4.83	9.76	4.43
	-16.7	11.8	5.05	11.7	5.15	11.2	4.88	10.8	4.68	10.5	4.49	9.76	4.12
	-14.7	12.4	5.15	11.9	4.92	11.2	4.56	10.8	4.38	10.5	4.20	9.76	3.86
	-12.6	12.6	4.96	11.9	4.61	11.2	4.27	10.8	4.11	10.5	3.95	9.76	3.63
	-10.5	12.6	4.66	11.9	4.34	11.2	4.03	10.8	3.87	10.5	3.72	9.76	3.43
	-9.5	12.6	4.53	11.9	4.22	11.2	3.91	10.8	3.77	10.5	3.62	9.76	3.33
	-8.5	12.6	4.41	11.9	4.11	11.2	3.82	10.8	3.67	10.5	3.53	9.76	3.25
	-7.0	12.6	4.23	11.9	3.95	11.2	3.67	10.8	3.53	10.5	3.40	9.76	3.13
	-5.0	12.6	4.02	11.9	3.75	11.2	3.49	10.8	3.36	10.5	3.23	9.76	2.98
	-3.0	12.6	3.83	11.9	3.58	11.2	3.33	10.8	3.21	10.5	3.09	9.76	2.85
	0.0	12.6	3.57	11.9	3.34	11.2	3.11	10.8	3.00	10.5	2.89	9.76	2.67
	3.0	12.6	3.36	11.9	3.14	11.2	2.93	10.8	2.82	10.5	2.72	9.76	2.52
	5.0	12.6	3.23	11.9	3.02	11.2	2.82	10.8	2.72	10.5	2.62	9.76	2.43
	7.0	12.6	3.11	11.9	2.91	11.2	2.72	10.8	2.63	10.5	2.53	9.76	2.35
	9.0	12.6	3.00	11.9	2.81	11.2	2.63	10.8	2.54	10.5	2.45	9.76	2.27
	11.0	12.6	2.90	11.9	2.72	11.2	2.54	10.8	2.46	10.5	2.37	9.76	2.20
	13.0	12.6	2.80	11.9	2.63	11.2	2.46	10.8	2.38	10.5	2.29	9.76	2.13
	15.0	12.6	2.72	11.9	2.55	11.2	2.39	10.8	2.31	10.5	2.23	9.76	2.07
60	-19.8	10.7	5.15	10.2	4.86	9.60	4.50	9.29	4.33	8.98	4.16	8.37	3.82
	-18.8	10.8	5.03	10.2	4.68	9.60	4.34	9.29	4.17	8.98	4.01	8.37	3.68
	-16.7	10.8	4.68	10.2	4.36	9.60	4.04	9.29	3.89	8.98	3.74	8.37	3.44
	-14.7	10.8	4.37	10.2	4.08	9.60	3.79	9.29	3.64	8.98	3.50	8.37	3.23
	-12.6	10.8	4.11	10.2	3.83	9.60	3.56	9.29	3.43	8.98	3.30	8.37	3.04
	-10.5	10.8	3.87	10.2	3.61	9.60	3.36	9.29	3.24	8.98	3.12	8.37	2.88
	-9.5	10.8	3.76	10.2	3.51	9.60	3.27	9.29	3.15	8.98	3.03	8.37	2.80
	-8.5	10.8	3.67	10.2	3.43	9.60	3.19	9.29	3.08	8.98	2.96	8.37	2.74
	-7.0	10.8	3.53	10.2	3.30	9.60	3.07	9.29	2.96	8.98	2.85	8.37	2.64
	-5.0	10.8	3.35	10.2	3.14	9.60	2.93	9.29	2.82	8.98	2.72	8.37	2.52
	-3.0	10.8	3.21	10.2	3.00	9.60	2.80	9.29	2.70	8.98	2.61	8.37	2.41
	0.0	10.8	3.00	10.2	2.81	9.60	2.62	9.29	2.53	8.98	2.44	8.37	2.27
	3.0	10.8	2.82	10.2	2.65	9.60	2.48	9.29	2.39	8.98	2.31	8.37	2.14
	5.0	10.8	2.72	10.2	2.55	9.60	2.39	9.29	2.31	8.98	2.23	8.37	2.07
	7.0	10.8	2.62	10.2	2.46	9.60	2.31	9.29	2.23	8.98	2.15	8.37	2.00
	9.0	10.8	2.54	10.2	2.38	9.60	2.23	9.29	2.16	8.98	2.09	8.37	1.94
	11.0	10.8	2.45	10.2	2.31	9.60	2.16	9.29	2.09	8.98	2.02	8.37	1.88
	13.0	10.8	2.37	10.2	2.23	9.60	2.10	9.29	2.03	8.98	1.96	8.37	1.83
	15.0	10.8	2.30	10.2	2.17	9.60	2.04	9.29	1.97	8.98	1.90	8.37	1.78
50	-19.8	9.03	4.18	8.51	3.90	8.00	3.62	7.74	3.49	7.49	3.36	6.97	3.09
	-18.8	9.03	4.03	8.51	3.76	8.00	3.50	7.74	3.37	7.49	3.24	6.97	2.99
	-16.7	9.03	3.76	8.51	3.51	8.00	3.27	7.74	3.15	7.49	3.03	6.97	2.80
	-14.7	9.03	3.52	8.51	3.29	8.00	3.07	7.74	2.96	7.49	2.85	6.97	2.64
	-12.6	9.03	3.32	8.51	3.10	8.00	2.89	7.74	2.79	7.49	2.69	6.97	2.49
	-10.5	9.03	3.13	8.51	2.94	8.00	2.74	7.74	2.64	7.49	2.55	6.97	2.36
	-9.5	9.03	3.05	8.51	2.86	8.00	2.67	7.74	2.58	7.49	2.49	6.97	2.31
	-8.5	9.03	2.98	8.51	2.79	8.00	2.61	7.74	2.52	7.49	2.43	6.97	2.26
	-7.0	9.03	2.87	8.51	2.69	8.00	2.52	7.74	2.43	7.49	2.34	6.97	2.18
	-5.0	9.03	2.74	8.51	2.57	8.00	2.40	7.74	2.32	7.49	2.24	6.97	2.08
	-3.0	9.03	2.62	8.51	2.46	8.00	2.30	7.74	2.23	7.49	2.15	6.97	2.00
	0.0	9.03	2.46	8.51	2.31	8.00	2.17	7.74	2.09	7.49	2.02	6.97	1.88
	2.2	9.03	2.32	8.51	2.18	8.00	2.05	7.74	1.98	7.49	1.92	6.97	1.79
	5.0	9.03	2.24	8.51	2.11	8.00	1.98	7.74	1.92	7.49	1.85	6.97	1.73
	7.0	9.03	2.17	8.51	2.04	8.00	1.92	7.74	1.86	7.49	1.80	6.97	1.68
	9.0	9.03	2.10	8.51	1.98	8.00	1.86	7.74	1.80	7.49	1.74	6.97	1.63
	11.0	9.03	2.03	8.51	1.92	8.00	1.80	7.74	1.75	7.49	1.69	6.97	1.58
	13.0	9.03	1.97	8.51	1.86	8.00	1.75	7.74	1.69	7.49	1.64	6.97	1.54
	15.0	9.03	1.91	8.51	1.81	8.00	1.70	7.74	1.65	7.49	1.60	6.97	1.50

TC Total capacity ; kW
PI Power Input ; kW(Comp.+Outdoor fan motor)

RXYMQ6PVE [50/60Hz]

Heating capacity

Combination (%) (Capacity index)	Outdoor air temp. °CDB	INDOOR AIR TEMP. °C 16.0 TC kW	16.0 PI kW	18.0 TC kW	18.0 PI kW	20.0 TC kW	20.0 PI kW	21.0 TC kW	21.0 PI kW	22.0 TC kW	22.0 PI kW	24.0 TC kW	24.0 PI kW
130	-19.8	-20.0	11.3	2.96	11.3	3.19	11.2	3.42	11.2	3.54	11.2	3.65	11.1	3.89
	-18.8	-19.0	11.6	3.09	11.6	3.31	11.6	3.53	11.5	3.65	11.5	3.76	11.5	3.98
	-16.7	-17.0	12.3	3.32	12.3	3.53	12.2	3.74	12.2	3.85	12.2	3.95	12.1	4.16
	-14.7	-15.0	13.0	3.52	12.9	3.72	12.9	3.92	12.9	4.02	12.8	4.12	12.8	4.32
	-12.6	-13.0	13.6	3.71	13.6	3.90	13.6	4.09	13.5	4.18	13.5	4.28	13.5	4.47
	-10.5	-11.0	14.3	3.87	14.3	4.05	14.2	4.24	14.2	4.33	14.2	4.42	14.1	4.60
	-9.5	-10.0	14.6	3.95	14.6	4.13	14.6	4.31	14.5	4.39	14.5	4.48	14.5	4.66
	-8.5	-9.1	14.9	4.02	14.9	4.19	14.9	4.37	14.8	4.45	14.8	4.54	14.8	4.71
	-7.0	-7.6	15.4	4.12	15.4	4.29	15.4	4.46	15.3	4.54	15.3	4.63	15.3	4.79
	-5.0	-5.6	16.1	4.26	16.1	4.42	16.0	4.58	16.0	4.66	16.0	4.74	15.9	4.90
	-3.0	-3.7	16.7	4.37	16.7	4.52	16.7	4.68	16.6	4.76	16.6	4.83	16.6	4.99
	0.0	-0.7	17.7	4.53	17.7	4.68	17.7	4.82	17.6	4.90	17.6	4.97	17.6	5.12
	3.0	2.2	18.7	4.68	18.7	4.81	18.6	4.95	18.6	5.02	18.6	5.09	18.5	5.23
	5.0	4.1	19.3	4.76	19.3	4.90	19.3	5.03	19.2	5.10	19.2	5.16	19.2	5.30
	7.0	6.0	20.0	4.84	19.9	4.97	19.9	5.10	19.9	5.16	19.9	5.23	19.8	5.36
	9.0	7.9	20.6	4.92	20.6	5.04	20.5	5.17	20.5	5.23	20.5	5.29	20.4	5.39
	11.0	9.8	21.2	4.99	21.2	5.11	21.2	5.23	21.1	5.29	21.1	5.35	20.4	5.19
	13.0	11.8	21.9	5.06	21.9	5.18	21.8	5.30	21.8	5.41	21.8	5.35	20.4	5.00
	15.0	13.7	22.6	5.12	22.5	5.24	22.5	5.35	22.4	5.41	21.9	5.26	20.4	4.81
120	-19.8	-20.0	11.2	3.27	11.2	3.49	11.2	3.70	11.1	3.81	11.1	3.91	11.1	4.13
	-18.8	-19.0	11.6	3.39	11.5	3.60	11.5	3.80	11.5	3.91	11.4	4.01	11.4	4.22
	-16.7	-17.0	12.2	3.60	12.2	3.80	12.2	3.99	12.2	4.09	12.1	4.19	12.1	4.38
	-14.7	-15.0	12.9	3.79	12.9	3.98	12.8	4.16	12.8	4.26	12.8	4.35	12.8	4.53
	-12.6	-13.0	13.6	3.96	13.5	4.14	13.5	4.31	13.5	4.40	13.5	4.49	13.4	4.67
	-10.5	-11.0	14.2	4.12	14.2	4.29	14.2	4.45	14.2	4.54	14.1	4.62	14.1	4.79
	-9.5	-10.0	14.6	4.19	14.5	4.35	14.5	4.52	14.5	4.60	14.5	4.68	14.4	4.84
	-8.5	-9.1	14.9	4.25	14.8	4.41	14.8	4.57	14.8	4.65	14.8	4.73	14.7	4.89
	-7.0	-7.6	15.4	4.35	15.3	4.51	15.3	4.66	15.3	4.74	15.3	4.81	15.2	4.97
	-5.0	-5.6	16.1	4.47	16.0	4.62	16.0	4.77	16.0	4.84	15.9	4.92	15.9	5.06
	-3.0	-3.7	16.7	4.58	16.6	4.72	16.6	4.86	16.6	4.93	16.6	5.00	16.5	5.15
	0.0	-0.7	17.7	4.73	17.7	4.86	17.6	5.00	17.6	5.07	17.6	5.13	17.5	5.27
	3.0	2.2	18.7	4.86	18.6	4.99	18.6	5.12	18.6	5.18	18.5	5.24	18.5	5.37
	5.0	4.1	19.3	4.94	19.3	5.07	19.2	5.19	19.2	5.25	19.2	5.31	18.8	5.29
	7.0	6.0	19.9	5.02	19.9	5.14	19.8	5.25	19.8	5.31	19.8	5.37	18.8	5.09
	9.0	7.9	20.6	5.09	20.5	5.20	20.5	5.32	20.5	5.37	20.2	5.33	18.8	4.90
	11.0	9.8	21.2	5.15	21.2	5.27	21.1	5.38	20.9	5.35	20.2	5.14	18.8	4.72
	13.0	11.8	21.9	5.22	21.8	5.33	21.6	5.36	20.9	5.15	20.2	4.95	18.8	4.55
	15.0	13.7	22.5	5.28	22.5	5.38	21.6	5.18	20.9	4.98	20.2	4.78	18.8	4.39
110	-19.8	-20.0	11.2	3.59	11.2	3.78	11.1	3.98	11.1	4.08	11.1	4.17	11.0	4.37
	-18.8	-19.0	11.5	3.69	11.5	3.88	11.5	4.07	11.4	4.17	11.4	4.26	11.4	4.45
	-16.7	-17.0	12.2	3.89	12.2	4.07	12.1	4.25	12.1	4.34	12.1	4.43	12.1	4.61
	-14.7	-15.0	12.9	4.06	12.8	4.23	12.8	4.40	12.8	4.49	12.8	4.57	12.7	4.74
	-12.6	-13.0	13.5	4.22	13.5	4.38	13.5	4.54	13.4	4.62	13.4	4.70	13.4	4.86
	-10.5	-11.0	14.2	4.36	14.2	4.52	14.1	4.67	14.1	4.75	14.1	4.82	14.1	4.98
	-9.5	-10.0	14.5	4.43	14.5	4.58	14.5	4.73	14.4	4.80	14.4	4.88	14.4	5.03
	-8.5	-9.1	14.8	4.49	14.8	4.63	14.8	4.78	14.7	4.85	14.7	4.93	14.7	5.07
	-7.0	-7.6	15.3	4.58	15.3	4.72	15.3	4.86	15.2	4.93	15.2	5.00	15.2	5.14
	-5.0	-5.6	16.0	4.69	16.0	4.82	15.9	4.96	15.9	5.03	15.9	5.10	15.9	5.23
	-3.0	-3.7	16.6	4.79	16.6	4.92	16.6	5.05	16.5	5.11	16.5	5.18	16.5	5.31
	0.0	-0.7	17.6	4.93	17.6	5.05	17.6	5.17	17.5	5.23	17.5	5.30	17.3	5.30
	3.0	2.2	18.6	5.05	18.6	5.16	18.5	5.28	18.5	5.34	18.5	5.40	17.3	4.96
	5.0	4.1	19.2	5.12	19.2	5.23	19.2	5.35	19.1	5.40	18.5	5.19	17.3	4.77
	7.0	6.0	19.9	5.19	19.8	5.30	19.8	5.41	19.2	5.20	18.5	4.99	17.3	4.58
	9.0	7.9	20.5	5.26	20.5	5.36	19.8	5.41	19.2	5.00	18.5	4.80	17.3	4.42
	11.0	9.8	21.1	5.32	21.1	5.41	19.8	5.01	19.2	4.82	18.5	4.63	17.3	4.26
	13.0	11.8	21.8	5.38	21.1	5.20	19.8	4.83	19.2	4.64	18.5	4.46	17.3	4.11
	15.0	13.7	22.3	5.40	21.1	5.03	19.8	4.66	19.2	4.49	18.5	4.31	17.3	3.97

Heating capacity

Combination (%) (Capacity index)	Outdoor air temp. °CDB	INDOOR AIR TEMP. °C 16.0 TC kW	16.0 PI kW	18.0 TC kW	18.0 PI kW	20.0 TC kW	20.0 PI kW	21.0 TC kW	21.0 PI kW	22.0 TC kW	22.0 PI kW	24.0 TC kW	24.0 PI kW
100	-19.8	-20.0	11.1	3.90	11.1	4.08	11.1	4.21	11.0	4.37	11.0	4.53	11.0	4.69	11.0	4.85
	-18.8	-19.0	11.5	4.00	11.4	4.17	11.4	4.30	11.4	4.46	11.4	4.61	11.3	4.77	11.3	4.92
	-16.7	-17.0	12.1	4.17	12.1	4.34	12.1	4.46	12.1	4.61	12.0	4.75	12.0	4.90	12.0	5.05
	-14.7	-15.0	12.8	4.33	12.8	4.49	12.8	4.62	12.7	4.74	12.7	4.88	12.7	5.02	12.6	5.16
	-12.6	-13.0	13.5	4.48	13.4	4.62	13.4	4.73	13.4	4.87	13.4	5.00	13.3	5.13	13.3	5.26
	-10.5	-11.0	14.1	4.61	14.1	4.75	14.1	4.85	14.1	4.98	14.0	5.10	14.0	5.23	14.0	5.35
	-9.5	-10.0	14.5	4.67	14.4	4.80	14.4	4.91	14.4	5.03	14.4	5.15	14.3	5.27	14.1	5.29
	-8.5	-9.1	14.7	4.72	14.7	4.85	14.7	4.95	14.7	5.07	14.7	5.19	14.6	5.31	14.1	5.15
	-7.0	-7.6	15.2	4.80	15.2	4.93	15.2	5.03	15.2	5.14	15.2	5.26	15.1	5.32	14.1	4.95
	-5.0	-5.6	15.9	4.90	15.9	5.03	15.9	5.12	15.9	5.23	15.8	5.34	15.7	5.33	14.1	4.69
	-3.0	-3.7	16.5	4.99	16.5	5.11	16.5	5.20	16.5	5.31	16.2	5.28	15.7	5.08	14.1	4.48
	0.0	-0.7	17.5	5.12	17.5	5.23	17.5	5.30	17.2	5.32	16.2	4.91	15.7	4.72	14.1	4.18
	2.2	2.2	18.5	5.23	18.5	5.34	18.5	5.40	17.2	5.30	16.2	4.60	15.7	4.43	14.1	3.92
	4.1	4.1	19.2	5.36	19.1	5.40	19.1	5.36	17.2	5.11	16.2	4.42	15.7	4.26	14.1	3.77
	6.0	6.0	19.8	5.36	19.2	5.40	19.2	5.37	17.2	4.91	16.2	4.26	15.7	4.10	14.1	3.64
	7.9	7.9	20.5	5.37	19.8	5.40	19.2	5.32	17.2	4.73	16.2	4.10	15.7	3.95	14.1	3.51
	9.8	9.8	21.2	5.35	20.5	5.37	19.2	5.14	17.2	4.56	16.2	3.96	15.7	3.82	14.1	3.39
	11.8	11.8	21.9	5.14	21.2	5.35	19.2	4.93	17.2	4.39	16.2	3.82	15.7	3.68	14.1	3.28
	13.7	13.7	22.5	4.93	21.8	5.14	19.2	4.74	17.2	4.25	16.2	3.70	15.7	3.57	14.1	3.18
90	-19.8	-20.0	11.0	4.52	11.0	4.67	11.0	4.81	11.0	4.88	10.9	5.02	10.9	5.16	10.9	5.30
	-18.8	-19.0	11.4	4.60	11.3	4.74	11.3	4.88	11.3	4.95	11.3	5.02	11.3	5.16	11.3	5.29
	-16.7	-17.0	12.0	4.75	12.0	4.88	12.0	5.01	12.0	5.07	11.9	5.14	11.9	5.27	11.9	5.42
	-14.7	-15.0	12.7	4.88	12.6	5.00	12.6	5.12	12.6	5.18	12.6	5.25	12.5	5.34	12.5	5.54
	-12.6	-13.0	13.4	4.99	13.3	5.11	13.3	5.23	13.3	5.28	13.3	5.34	12.5	5.01	12.5	5.01
	-10.5	-11.0	14.0	5.10	13.9	5.21	13.9	5.32	13.9	5.36	13.9	5.14	12.5	4.72	12.5	4.72
	-9.5	-10.0	14.3	5.15	14.3	5.25	14.3	5.36	13.9	5.21	13.5	5.00	12.5	4.59	12.5	4.59
	-8.5	-9.1	14.7	5.19	14.6	5.29	14.4	5.28	13.9	5.07	13.5	4.87	12.5	4.48	12.5	4.48
	-7.6	-7.6	15.2	5.26	15.1	5.36	14.4	5.07	13.9	4.87	13.5	4.68	12.5	4.30	12.5	4.30
	-5.6	-5.6	15.8	5.34	15.3	5.18	14.4	4.81	13.9	4.62	13.5	4.44	12.5	4.09	12.5	4.09
	-3.7	-3.7	16.3	4.93	15.3	4.60	14.4	4.27	13.9	4.11	13.5	3.96	12.5	3.65	12.5	3.65
	-0.7	-0.7	16.3	4.62	15.3	4.31	14.4	4.01	13.9	3.87	13.5	3.72	12.5	3.44	12.5	3.44
	2.2	2.2	16.3	4.44	15.3	4.15	14.4	3.86	13.9	3.72	13.5	3.58	12.5	3.31	12.5	3.31
	4.1	4.1	16.3	4.27	15.3	3.99	14.4	3.72	13.9	3.59	13.5	3.46	12.5	3.19	12.5	3.08
	6.0	6.0	16.3	4.12	15.3	3.85	14.4	3.59	13.9	3.46	13.5	3.33	12.5	3.08	12.5	2.98
	7.9	7.9	16.3	3.97	15.3	3.72	14.4	3.47	13.9	3.34	13.5	3.22	12.5	2.98	12.5	2.89
	9.8	9.8	16.3	3.83	15.3	3.59	14.4	3.35	13.9	3.23	13.5	3.12	12.5	2.89	12.5	2.80
	11.8	11.8	16.3	3.71	15.3	3.48	14.4	3.25	13.9	3.13	13.5	3.02	12.5	2.80		
	13.7	13.7														
80	-19.8	-20.0	11.0	4.67	11.0	4.81	11.0	4.88	10.9	5.02	10.9	5.16				
	-18.8	-19.0	11.4	4.60	11.3	4.74	11.3	4.88	11.3	4.95	11.3	5.02				
	-16.7	-17.0	12.0	4.75	12.0	4.88	12.0	5.01	12.0	5.07	11.9	5.14				
	-14.7	-15.0	12.7	4.88	12.6	5.00	12.6	5.12	12.6	5.18	12.6	5.25				
	-12.6	-13.0	13.4	4.99	13.3	5.11	13.3	5.23	13.3	5.28	13.3	5.34				
	-10.5	-11.0	14.0	5.10	13.9	5.21	13.9	5.32	13.9	5.36	13.9	5.14				
	-9.5	-10.0	14.3	5.15	14.3	5.25	14.3	5.36	13.9	5.21	13.5	5.00				
	-8.5	-9.1	14.7	5.19	14.6	5.29	14.4	5.28	13.9	5.07	13.5	4.87				
	-7.6	-7.6	15.2	5.25	15.1	5.36	14.4	5.07	13.9	4.87	13.5	4.68				
	-5.6	-5.6	15.8	5.34	15.3	5.18	14.4	4.81	13.9	4.62	13.5	4.44				
	-3.7	-3.7	16.3	4.93	15.3	4.60	14.4	4.27	13.9	4.11	13.5	3.96				
	-0.7	-0.7	16.3	4.62	15.3	4.31	14.4	4.01	13.9	3.87	13.5	3.72				
	2.2	2.2	16.3	4.44	15.3	4.15	14.4	3.86	13.9	3.72	13.5	3.58				
	4.1	4.1	16.3	4.27	15.3	3.99	14.4	3.72	13.9	3.59	13.5	3.46				
	6.0	6.0	16.3	4.12	15.3	3.85	14.4	3.59	13.9	3.46	13.5	3.33				
	7.9	7.9	16.3	3.97	15.3	3.72	14.4	3.47	13.9	3.34	13.5	3.22				
	9.8	9.8	16.3	3.83	15.3	3.59	14.4	3.35	13.9	3.23	13.5	3.12				
	11.8	11.8	16.3	3.71	15.3	3.48	14.4	3.25	13.9	3.13	13.5	3.02				
	13.7	13.7														

TC Total capacity ; kW
PI Power Input ; kW(Comp.+Outdoor fan motor)

[50/60Hz]

Heating capacity

Combination (%) (Capacity index)	Outdoor air temp. °CDB	INDOOR AIR TEMP. °C 16.0 TC kW	16.0 PI kW	18.0 TC kW	18.0 PI kW	20.0 TC kW	20.0 PI kW	21.0 TC kW	21.0 PI kW	22.0 TC kW	22.0 PI kW	24.0 TC kW	24.0 PI kW
70	-19.8	11.0	4.84	10.9	4.96	10.9	5.09	10.9	5.15	10.9	5.21	10.9	5.34
	-18.8	11.3	4.91	11.3	5.03	11.3	5.15	11.2	5.21	11.2	5.27	11.0	5.22
	-16.7	12.0	5.03	11.9	5.15	11.9	5.26	11.9	5.32	11.8	5.30	11.0	4.86
	-14.7	12.6	5.15	12.6	5.25	12.6	5.36	12.2	5.16	11.8	4.95	11.0	4.55
	-12.6	13.3	5.25	13.3	5.35	12.6	5.04	12.2	4.84	11.8	4.65	11.0	4.28
	-10.5	14.0	5.34	13.4	5.11	12.6	4.75	12.2	4.56	11.8	4.39	11.0	4.04
	-9.5	14.2	5.33	13.4	4.97	12.6	4.61	12.2	4.44	11.8	4.27	11.0	3.93
	-8.5	14.2	5.20	13.4	4.84	12.6	4.50	12.2	4.33	11.8	4.16	11.0	3.84
	-7.0	14.2	4.99	13.4	4.65	12.6	4.32	12.2	4.16	11.8	4.00	11.0	3.69
	-5.0	14.2	4.73	13.4	4.42	12.6	4.11	12.2	3.96	11.8	3.81	11.0	3.51
	-3.0	14.2	4.52	13.4	4.22	12.6	3.92	12.2	3.78	11.8	3.64	11.0	3.36
	-3.7	14.2	4.21	13.4	3.94	12.6	3.67	12.2	3.54	11.8	3.41	11.0	3.15
	0.0	14.2	3.96	13.4	3.70	12.6	3.45	12.2	3.33	11.8	3.21	11.0	2.97
	2.2	14.2	3.80	13.4	3.56	12.6	3.32	12.2	3.21	11.8	3.09	11.0	2.86
	4.1	14.2	3.67	13.4	3.43	12.6	3.21	12.2	3.09	11.8	2.98	11.0	2.77
	6.0	14.2	3.54	13.4	3.32	12.6	3.10	12.2	2.99	11.8	2.89	11.0	2.68
	7.9	14.2	3.42	13.4	3.21	12.6	3.00	12.2	2.89	11.8	2.79	11.0	2.59
	9.8	14.2	3.30	13.4	3.10	12.6	2.90	12.2	2.80	11.8	2.70	11.0	2.51
	11.8	14.2	3.20	13.4	3.00	12.6	2.81	12.2	2.72	11.8	2.62	11.0	2.44
	13.7	14.2		13.4		12.6		12.2		11.8		11.0	
60	-19.8	10.9	5.15	10.9	5.26	10.8	5.31	10.5	5.10	10.1	4.90	9.41	4.50
	-18.8	11.2	5.21	11.2	5.31	10.8	5.11	10.5	4.92	10.1	4.72	9.41	4.34
	-16.7	11.9	5.32	11.5	5.14	10.8	4.76	10.5	4.58	10.1	4.40	9.41	4.05
	-14.7	12.2	5.16	11.5	4.80	10.8	4.46	10.5	4.29	10.1	4.13	9.41	3.80
	-12.6	12.2	4.84	11.5	4.51	10.8	4.20	10.5	4.04	10.1	3.89	9.41	3.59
	-11.0	12.2	4.56	11.5	4.26	10.8	3.96	10.5	3.82	10.1	3.67	9.41	3.39
	-10.0	12.2	4.43	11.5	4.14	10.8	3.85	10.5	3.71	10.1	3.58	9.41	3.30
	-9.1	12.2	4.33	11.5	4.04	10.8	3.76	10.5	3.63	10.1	3.49	9.41	3.23
	-7.6	12.2	4.16	11.5	3.89	10.8	3.62	10.5	3.49	10.1	3.36	9.41	3.11
	-5.6	12.2	3.95	11.5	3.70	10.8	3.45	10.5	3.33	10.1	3.21	9.41	2.97
	-3.7	12.2	3.78	11.5	3.54	10.8	3.30	10.5	3.19	10.1	3.07	9.41	2.85
	0.0	12.2	3.53	11.5	3.31	10.8	3.09	10.5	2.99	10.1	2.88	9.41	2.67
	2.2	12.2	3.33	11.5	3.12	10.8	2.92	10.5	2.82	10.1	2.72	9.41	2.53
	4.1	12.2	3.21	11.5	3.01	10.8	2.82	10.5	2.72	10.1	2.63	9.41	2.44
	6.0	12.2	3.09	11.5	2.90	10.8	2.72	10.5	2.63	10.1	2.54	9.41	2.36
	7.9	12.2	2.99	11.5	2.81	10.8	2.63	10.5	2.54	10.1	2.46	9.41	2.29
	9.8	12.2	2.89	11.5	2.72	10.8	2.55	10.5	2.47	10.1	2.38	9.41	2.22
	11.8	12.2	2.80	11.5	2.63	10.8	2.47	10.5	2.39	10.1	2.31	9.41	2.15
	13.7	12.2	2.72	11.5	2.56	10.8	2.40	10.5	2.32	10.1	2.24	9.41	2.09
50	-19.8	10.2	4.93	9.58	4.59	9.00	4.27	8.71	4.11	8.42	3.95	7.84	3.65
	-18.8	10.2	4.75	9.58	4.43	9.00	4.12	8.71	3.97	8.42	3.82	7.84	3.52
	-16.7	10.2	4.43	9.58	4.14	9.00	3.85	8.71	3.71	8.42	3.57	7.84	3.30
	-14.7	10.2	4.15	9.58	3.88	9.00	3.62	8.71	3.49	8.42	3.36	7.84	3.11
	-13.0	10.2	3.91	9.58	3.66	9.00	3.41	8.71	3.29	8.42	3.17	7.84	2.94
	-11.0	10.2	3.69	9.58	3.46	9.00	3.23	8.71	3.12	8.42	3.01	7.84	2.79
	-10.0	10.2	3.60	9.58	3.37	9.00	3.15	8.71	3.04	8.42	2.93	7.84	2.72
	-9.1	10.2	3.51	9.58	3.29	9.00	3.08	8.71	2.97	8.42	2.86	7.84	2.66
	-7.6	10.2	3.38	9.58	3.17	9.00	2.96	8.71	2.86	8.42	2.76	7.84	2.57
	-5.6	10.2	3.22	9.58	3.02	9.00	2.83	8.71	2.73	8.42	2.64	7.84	2.45
	-3.7	10.2	3.09	9.58	2.90	9.00	2.71	8.71	2.62	8.42	2.53	7.84	2.36
	-0.7	10.2	2.90	9.58	2.72	9.00	2.55	8.71	2.47	8.42	2.38	7.84	2.22
	2.2	10.2	2.73	9.58	2.57	9.00	2.41	8.71	2.34	8.42	2.26	7.84	2.11
	4.1	10.2	2.64	9.58	2.49	9.00	2.33	8.71	2.26	8.42	2.18	7.84	2.04
	6.0	10.2	2.55	9.58	2.40	9.00	2.26	8.71	2.19	8.42	2.12	7.84	1.98
	7.9	10.2	2.47	9.58	2.33	9.00	2.19	8.71	2.12	8.42	2.05	7.84	1.92
	9.8	10.2	2.39	9.58	2.26	9.00	2.12	8.71	2.06	8.42	1.99	7.84	1.86
	11.8	10.2	2.32	9.58	2.19	9.00	2.06	8.71	2.00	8.42	1.93	7.84	1.81
	13.7	10.2	2.26	9.58	2.13	9.00	2.00	8.71	1.94	8.42	1.88	7.84	1.76

TC Total capacity ; kW
PI Power Input ; kW(Comp.+Outdoor fan motor)

12

8.3 Capacity Correction Factor

RX(Y)MQ4 · 5PVE

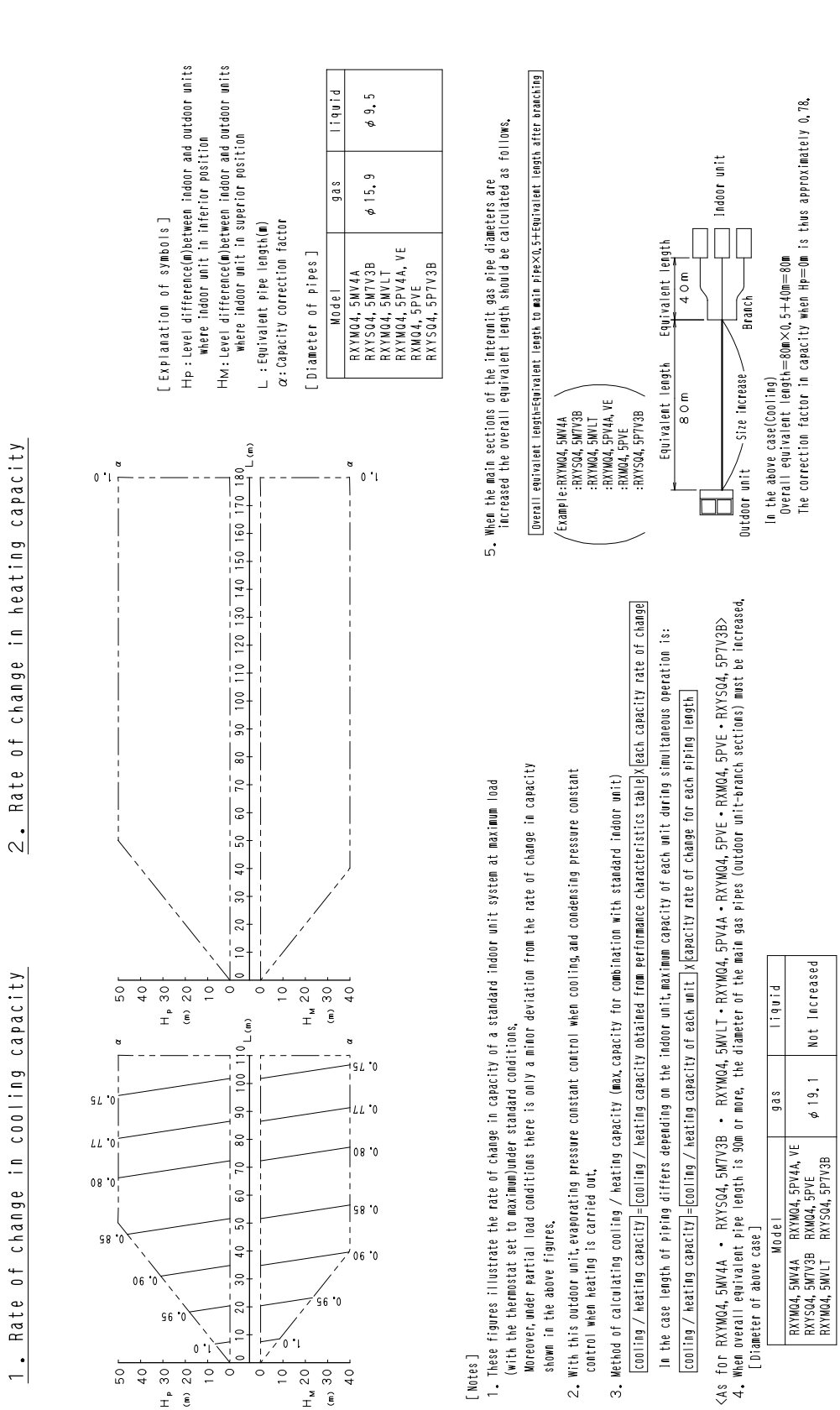

1. Rate of change in cooling capacity

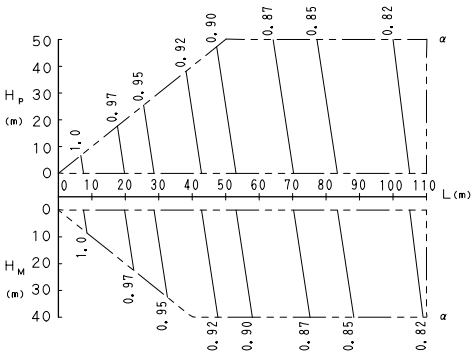

2. Rate of change in heating capacity

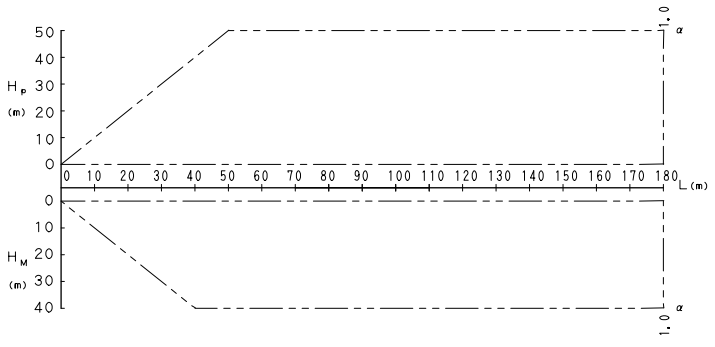

[Explanation of symbols]

Hp : Level difference(m)between indoor and outdoor units where indoor unit in inferior position

HM : Level difference(m)between indoor and outdoor units where indoor unit in superior position

L : Equivalent pipe length(m)

α : Capacity correction factor

[Diameter of pipes]

Model	gas	liquid
RXYMQ6MV4A RXYSQ6M7V3B RXYMQ6MVLT RXYMQ6PV4A, VE RXMQ6PVE RXYSQ6P7V3B	φ19.1	φ9.5

[Notes]

1. These figures illustrate the rate of change in capacity of a standard indoor unit system at maximum load (with the thermostat set to maximum)under standard conditions.
   Moreover, under partial load conditions there is only a minor deviation from the rate of change in capacity shown in the above figures.
2. With this outdoor unit, evaporating pressure constant control when cooling, and condensing pressure constant control when heating is carried out.
3. Method of calculating cooling / heating capacity (max. capacity for combination with standard indoor unit)

   cooling / heating capacity = cooling / heating capacity obtained from performance characteristics table X each capacity rate of change

   In the case length of piping differs depending on the indoor unit, maximum capacity of each unit during simultaneous operation is:

   cooling / heating capacity = cooling / heating capacity of each unit X capacity rate of change for each piping length

<As for RXYMQ6MV4A • RXYSQ6M7V3B • RXYMQ6MVLT • RXYMQ6PV4A • RXYMQ6PVE • RXMQ6PVE • RXYSQ6P7V3B>

4. When overall equivalent pipe length is 90m or more, the diameter of the main gas pipes (outdoor unit-branch sections) must be increased.
   [Diameter of above case]

Model		gas	liquid
RXYMQ6MV4A	RXYMQ6PV4A, VE	φ22.2	Not Increased
RXYSQ6M7V3B	RXMQ6PVE		
RXYMQ6MVLT	RXYSQ6P7V3B		

5. When the main sections of the interunit gas pipe diameters are increased the overall equivalent length should be calculated as follows.

   Overall equivalent length=Equivalent length to main pipe×0.5+Equivalent length after branching

   (Example:RXYMQ6MV4A
   :RXYSQ6M7V3B
   :RXYMQ6MVLT
   :RXYMQ6PV4A, VE
   :RXMQ6PVE
   :RXYSQ6P7V3B)

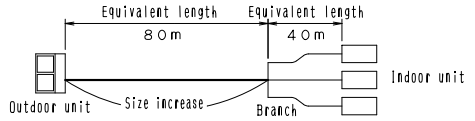

In the above case(Cooling)
Overall equivalent length=80m×0.5+40m=80m
The correction factor in capacity when Hp=0m is thus approximately 0.86.

3D045961B

8.4 Notes for Heating Capacity Characteristics

- The tables do not take account of the reduction in capacity when frost has accumulated or while the defrosting operation is in progress.
  The capacity values which take these factors into account, in other words the integrated heating capacity values, can be calculated as follows:

Formula
Integrated heating capacity = A
Value given in table of capacity characteristics = B
Integrating correction factor for frost accumulation = C
A=B×C

- Correction factor for finding integrated heating capacity

Inlet Port Temperature of Heat Exchanger (°C / RH 85%)	-7	-5	-3	0	3	5	7
Integrating Correction Factor for Frost Accumulation	0.95	0.93	0.88	0.84	0.85	0.90	1.00

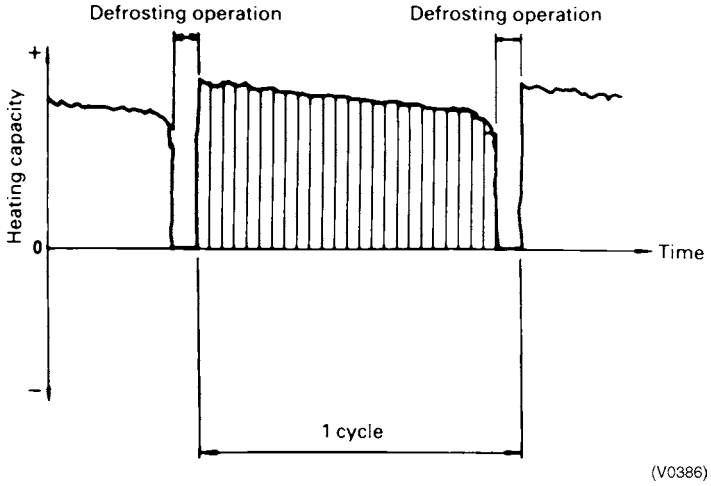

Note:
It will be seen from the figure above that the integrated heating capacity expresses the integrated heating capacity for a single cycle (from defrost operation to defrost operation) in terms of time.

- Please take note that when there is an accumulation of snow against the outside surface of the outdoor unit heat exchanger there will always be a temporary reduction in capacity although this will, of course, vary in degree in accordance with a number of other factors such as the outdoor temperature (°CDB), relative humidity (RH) and the amount of frosting which occurs.

9. Operation Limits

9.1 Heat Pump

RXYMQ4 · 5 · 6PVE

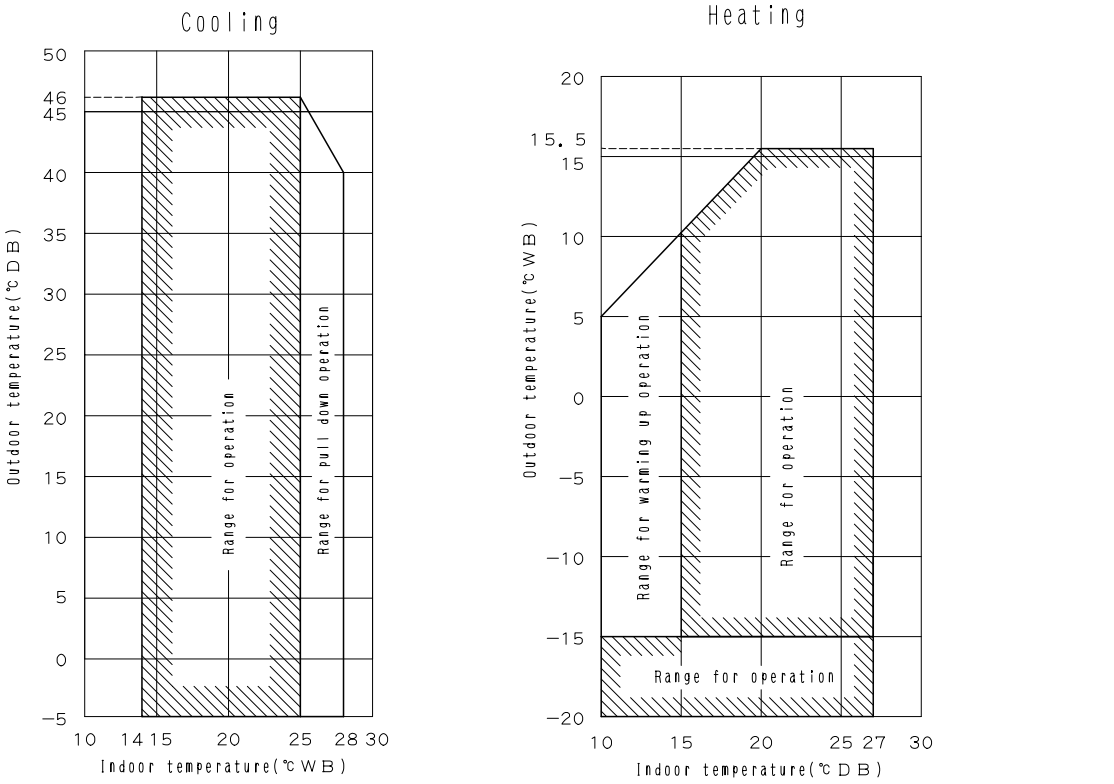

Note:These figures assume the following operating conditions.
Indoor and outdoor units:
- Equivalent pipe length:7.5m
- Level difference:0m

3D045713B

12

9.2 Cooling Only

RXMQ4 · 5 · 6PVE

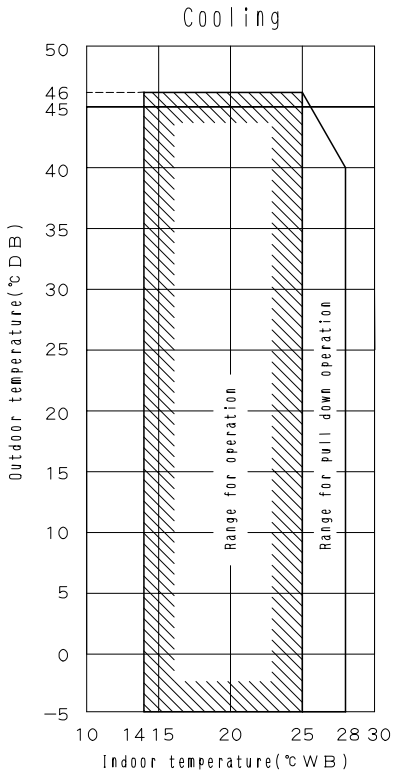

Note:These figures assume the following operating conditions.
Indoor and outdoor units:
- Equivalent pipe length:7.5m
- Level difference:0m

3D052715

10. Sound Levels

Overall

dBA

Power Supply	220-240V/220V, 50/60Hz		Power Supply	220-240V/220V, 50/60Hz
Model	Cooling	Heating	Model	Cooling
RXYMQ4PVE	50	52	RXMQ4PVE	50
RXYMQ5PVE	51	53	RXMQ5PVE	51
RXYMQ6PVE	53	55	RXMQ6PVE	53

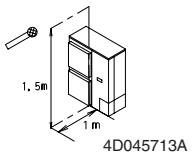

4D045713A

Octave Band Level

RX(Y)MQ4PVE (Cooling)

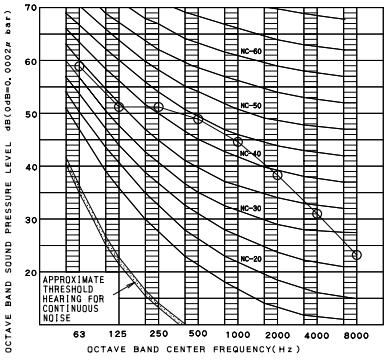

4D052713A

RXYMQ4PVE (Heating)

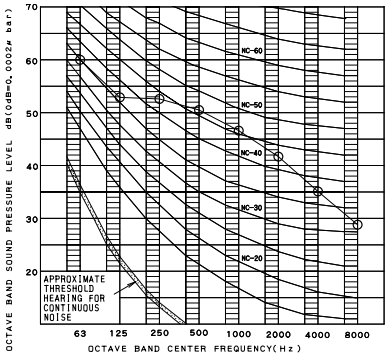

4D052719

RX(Y)MQ5PVE (Cooling)

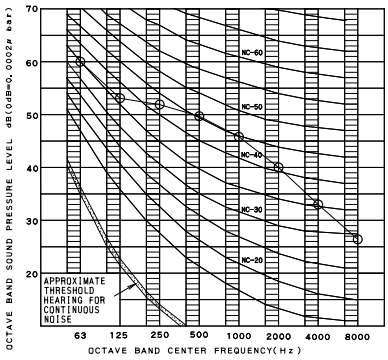

4D052714A

RXYMQ5PVE (Heating)

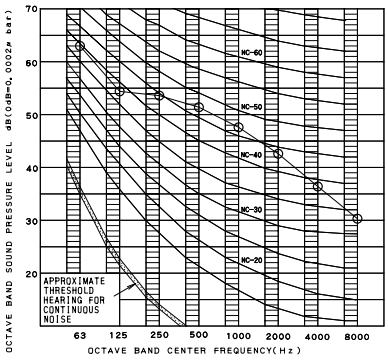

4D052718

RX(Y)MQ6PVE (Cooling)

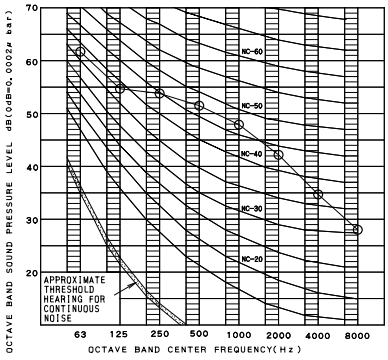

4D052716A

RXYMQ6PVE (Heating)

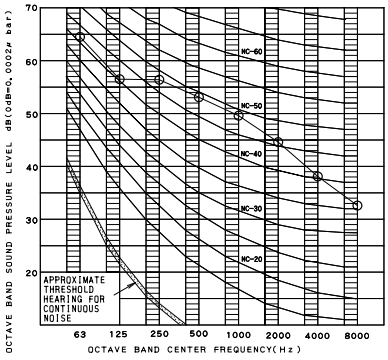

4D052717

12

11. Accessories

11.1 Outdoor Units

11.1.1 Standard Accessories

Mae sure that the accessories shown below are all present.
(The accessories can be found behind the front panel.)

Name	Operation manual	Clamp	Others
Quantity	1	2 pcs.	• Installation manual
Shape			

Only comes with Q6 model			
Name	Gas side accessory pipe (1)	Gas side accessory pipe (2)	Gas side accessory pipe (3)
Quantity	1 pc.	1 pc.	1 pc.
Shape	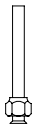		

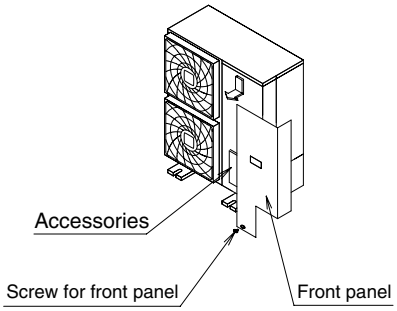

11.1.2 Optional Accessories

RX(Y)MQ4 · 5 · 6PVE

Optional accessories		RXYMQ4PVE, RXMQ4PVE RXYMQ5PVE, RXMQ5PVE RXYMQ6PVE, RXMQ6PVE
Cool/Heat Selector		KRC19-26A
Fixing box		KJB111A
Distributive Piping	Refnet header	KHRP26M22H, KHRP26M33H (MAX. 4 branch) (MAX. 8 branch)
	Refnet joint	KHRP26M22T
Central drain plug		KKPJ5F180
Fixture for preventing overturning		KPT-60B160
Wire fixture for preventing overturning		K-KYZP15C

C: 3D045727B

Part 4 Installation of Outdoor Units

1. Precaution on Installation....356
2. Installation of Outdoor Units....359
3. REFNET Pipe System....360
   3.1 Precautions on Refrigerant Piping....360
4. REFNET Pipe System....364
   4.1 REFNET Pipe System....364
5. Example of Connection....365
6. Field Wiring....366
   6.1 Field Wiring....366
7. Additional Refrigerant Charge....368
   7.1 Before Adding Refrigerant....368
   7.2 Checking the Refrigerant Tank....368
   7.3 Adding Refrigerant....369
8. Post-Work Checks....369
9. Test Run....369
   9.1 Power On–Check Operation....369
   9.2 Temperature Control Operation Checklist....370

13

1. Precaution on Installation

SAFETY CONSIDERATIONS

Please read this “SAFETY CONSIDERATIONS” carefully before installing air conditioning equipment and be sure to install it correctly. This manual classifies precautions into WARNINGS and CAUTIONS. Be sure to follow all precautions below: they are all important for ensuring safety.
After completing the installation, make sure that the unit operates properly during the start-up operation.
Please instruct the customer on how to operate the unit and keep it maintained.
Also, inform customers that they should store this installation manual along with the operation manual for future reference.
This air conditioner comes under the terms “appliances not accessible to the general public”.

<Safety Precaution>

VRV System is a class A product. In a domestic environment this product may cause radio interference in which case the user may be required to take adequate measures.

Meaning of warning and caution symbols.

Warning..... Failure to observe a warning may result in death or serious injury.

Caution..... Failure to observe a caution may result in injury or damage to the unit.

Warning

- Ask your dealer or qualified personnel to carry out installation work. Do not try to install the machine yourself.
  Improper installation may result in water leakage, electric shocks or fire.
- Perform installation work in accordance with this installation manual.
  Improper installation may result in water leakage, electric shocks or fire.
- Steps must be taken to prevent the critical concentration from being exceeding in case the refrigerant leaks when the unit is installed in a small room. Consult your dealer about ways to avoid exceeding the critical concentration.
  If the refrigerant does leak and the critical concentration is breached, the room may become deprived of oxygen.
- Be sure to use only the specified accessories and parts for installation work.
  Failure to use the specified parts may result in water leakage, electric shocks, fire or the unit falling.
- Install in a location which can fully support the weight of the unit.
  Insufficiently strong locations will cause the unit to drop and cause injury.
- Carry out the specified installation work after taking into account strong winds, typhoons or earthquakes.
  Improper installation work may result in the equipment falling and causing accidents.
- Electrical wiring work should be done in compliance with all local laws, specifications, and this manual. Dedicated power supply wiring should be used.
  Insufficient capacity in the power supply wiring or incorrect wiring work may cause electric shock or fire.
- Make sure that all wiring is secured, the specified wires and used, and no external forces act on the terminal connections or wires.
  Improper connections or installation may result in fire.
- Wiring between indoor and outdoor units and for the power wiring should be laid out and securely attached with an outer panel so it does not force the service lid or other parts out of place.
  Otherwise this may cause the terminal board to get hot, electric shock, or fires.
- If the refrigerant gas leaks during installation, ventilate the area immediately.
  Toxic gas may be produced if the refrigerant gas comes into contact with fire.
- After completing the installation work, check that the refrigerant gas does not leak.
  Toxic gas may be produced if the refrigerant gas leaks into the room and comes into contact with a source of fire, such as a fan heater, stove or cooker.
- Always shut off the power before touching any electrical parts.
- Be sure to establish an earth.
  Do not earth the unit to a utility pipe, arrester, or telephone earth.
  Incomplete earth may cause electrical shock, or fire.
  A high surge current from lightning or other sources may cause damage to the air conditioner.
- Be sure too install an earth leakage breaker.
  Failure to install an earth leakage breaker may result in electric shocks, or fire.

Caution

- Drain pipes should be laid following the explanation in this installation manual to achieve proper drainage and should be insulated to prevent condensation.
  Improper drain work may cause leaks, damaging furniture, etc.
- Install the indoor and outdoor units, power supply wiring and connecting wiring at least 1 meter away from televisions or radios in order to prevent image interference or noise.
- Do not install the air conditioner in the following locations:
  (a) where a mineral oil mist or an oil spray or vapor is produced, for example in a kitchen.
  Plastic parts may deteriorate and fall off or result in water leakage.
  (b) where corrosive gas, such as sulfurous acid gas, is produced.
  Corroding copper pipes or soldered parts may result in refrigerant leakage.
  (c) near machinery emitting electromagnetic waves.
  Electromagnetic waves may disturb the operation of the control system and result in a malfunction of the equipment.

(d) where flammable gases may leak, where there are carbon fiber or ignitable dust suspensions in the air, or where volatile flammables such as thinner or gasoline are handled.
Operating the unit in such conditions may result in fire.

(e) Make sure to provide for adequate measures in order to prevent that the outdoor unit be used as a shelter by small animals.
Small animals making contact with electrical parts can cause malfunctions, smoke or fire. Please instruct the customer to keep the area around the unit clean.

- Do not mount or place objects on the outdoor unit. Falling and tipping may cause injury.
- Do not wash outdoor or indoor units with water. This may cause electric shock or fire.

Disposal requirements

Dismounting of the unit, treatment of the refrigerant, oil and eventual other parts, should be done in accordance with the relevant local and national regulations.

Caution

See the indoor unit's installation manual for indoor unit and the remote controller installation.

BEFORE INSTALLATION

<Transporting the Unit>

As shown in figure below, bring the unit slowly. (Take care not to let hands or things come in contact with rear fins.)

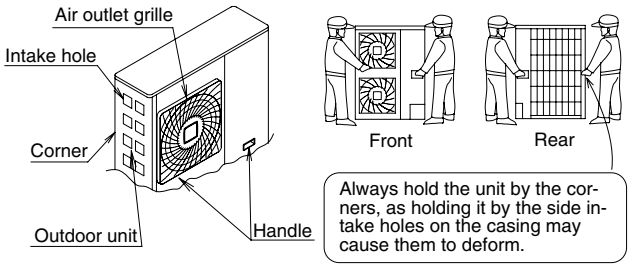

Use only accessories and parts which are of the designated specification when installing.

SELECTING INSTALLATION SITE

(1) Select an installation site where the following conditions are satisfied and that meets with your customer's approval.

- Places which are well-ventilated.
- Places where the unit does not bother next-door neighbors.
- A locations where small animals will not make nests in the unit.
- Safe places which can withstand the unit's weight and vibration and where the unit can be installed level.
- Locations not exposed to rain.
- A locations where there is enough space to install the unit.
- Places where the indoor and outdoor unit's piping and wiring lengths come within the allowable ranges.
- A location where there is no risk of flammable gas leaking.

(2) If the unit is installed in a location where it might be exposed to strong wind, install as per figure below.

- 5m/sec or more strong wind blown against the outdoor unit's air outlet causes the outdoor unit to deteriorate in air capacity and suck in the air blown out of its air outlet (short circuit), and the following effects may result.
  - Drop in performance.
  - Increased frost formation in heating mode.
  - Shutting down due to increase in pressure.
- If very strong wind blows continuously on the side of the outdoor unit with the outlet vent, the fan may turn in reverse at high speed and break, so install as per figure below.

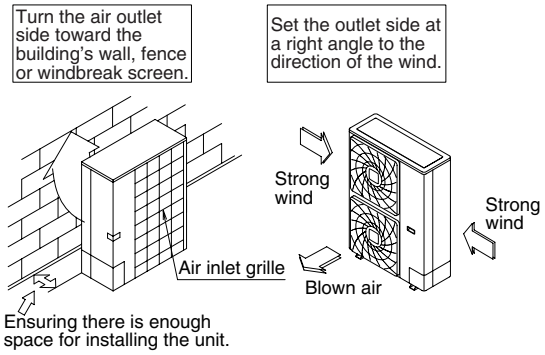

(3) In installing the unit in a place frequently exposed to snow, pay special attention to the following:

- Elevate the foundation as high as possible.
- Attach the snow hood (field supply).
- Remove the rear inlet grille to prevent snow from accumulating on the rear fins.

(4) The outdoor unit may short circuit depending on its environment, so use the louvers (field supply).

(5) The refrigerant gas (R-410A) is a safe, non-toxic and non-flammable gas, but if it leaks into the room, the concentration may exceed tolerance levels, especially in small rooms, so steps need to be taken to prevent refrigerant leakage. See the equipment design reference for details.

(6) Inverter-type air conditioners sometimes cause static in other electrical appliances.
When selecting an installation location, make sure the air conditioner and all wiring are sufficiently far away from radios, computers, stereos, and other appliances, as shown in figure below.
Particularly for locations with weak reception, ensure there is a distance of at least 3 meters for indoor remote controllers, place power supply wiring and interunit wiring in conduits, and ground the conduits. Use shielded wire for interunit wiring.

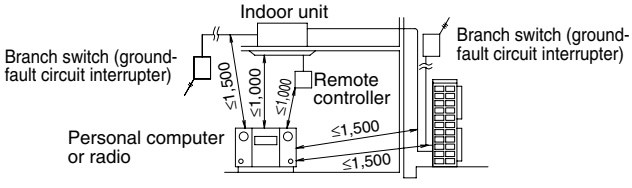

13

PRECAUTIONS ON INSTALLATION

- Install making sure the unit is level and the foundation is sturdy enough to prevent vibration noise.
- In accordance with the foundation drawing in figure below, fix the unit securely by means of the foundation bolts.
  (Prepare four sets of M12 foundation bolts, nuts and washers each which are available on the market.)
- The foundation bolts should be inserted 20 mm.

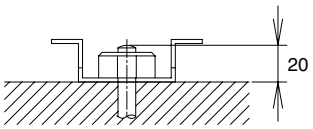

Diagram of lower surface

<Drain pipe disposal>

- Locations where drainage from the outdoor unit might be a problem.
  In such locations, for example, where the drainage might drip onto passers-by, lay the drain piping using the separately sold drain plug.
- When laying the drain, at least 100 mm from the bottom of the outdoor unit is needed.
- Make sure the drain works properly.
  (Watch out for water leaks if piping is brought out the bottom.)

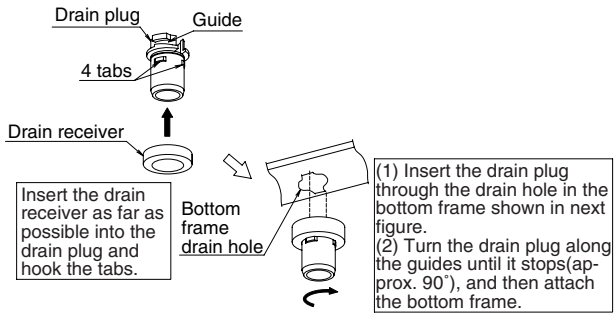

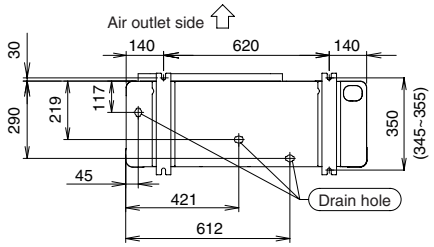

Diagram of lower surface (Unit : mm)

[How to remove the transport clasp]

- A yellow transport clasp and washer are attached to the legs of the compressor to protect the unit during transportation, so remove them as shown in figure below.

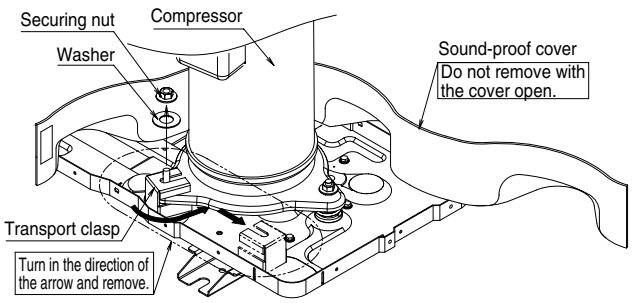

(1) Open the sound-proof cover as shown in previous figure . Do not pull the sound-proof cover or remove it from the compressor.
(2) Remove the securing nut.
(3) Remove the washer.
(4) Remove the transport clasp as shown in previous figure.
(5) Retighten the securing nut.
(6) Return the sound-proof cover as it was.

2. Installation of Outdoor Units

Center of Gravity

Unit: mm

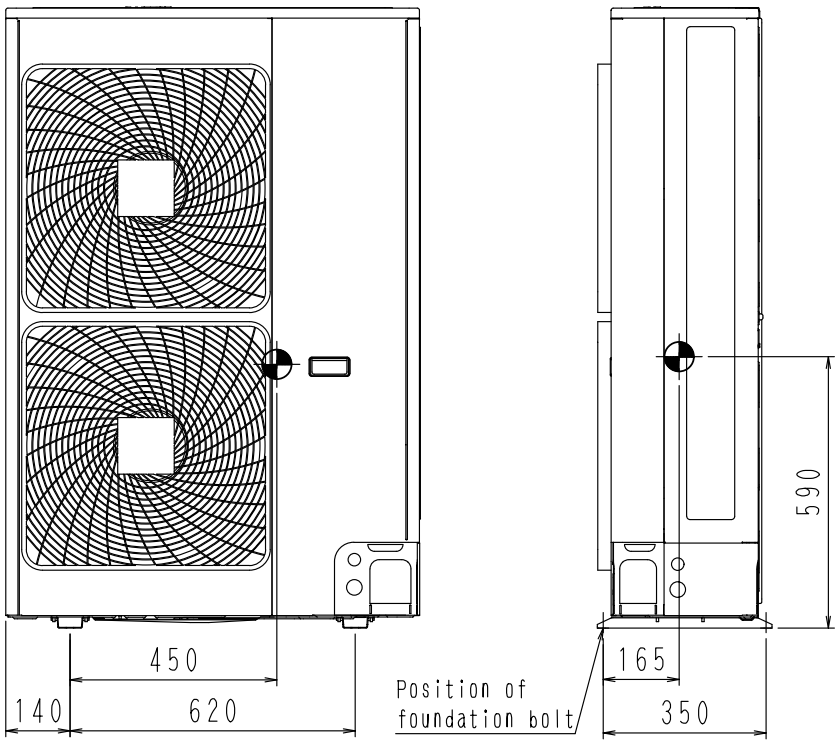

4D052604

13

3. REFNET Pipe System

3.1 Precautions on Refrigerant Piping

Caution

To the pipe-layer

- Do not operate the unit with the transport clasp attached. This can cause abnormal shaking or noise. See "**PRECAUTIONS ON INSTALLATION**" and "How to remove the transport clasp".

3.1.1 Installation tools

Use the right parts to ensure tolerance and to prevent foreign matter for entering.

Gauge manifold, charge hose, etc.

- Make sure to use installation tools that are exclusively used for R-410A installations to withstand the pressure and to prevent foreign materials (e.g. mineral oils such as SUNISO and moisture) from mixing into the system.
  (The screw specifications differ for R-410A and R-407C.)

Vacuum pump

- Use extreme caution to prevent pump oil from flowing backwards through the system when the pump is stopped.
- Use a vacuum pump which can evacuate to –100.7 kPa (5Torr, –755mmHg).

3.1.2 Selecting piping material

- Use pipes that have no contaminants adhered to their inner surfaces (such as sulfur, iron oxide, dust, cutting chips, oil and moisture). (It is desirable that adhered oil inside the piping is 30mg or less per 10m.)
- The wall thickness of the refrigerant piping should comply with local laws and regulations. The design pressure for R-410A is 4.0MPa.
- Use the following material for the refrigerant piping. Material: Jointless phosphor-deoxidized copper pipe.
- Thickness and size: choose based on the piping size selection method on the "**Air tight test and vacuum drying**".
- Make sure to use the separately sold refrigerant branch kit when branching the piping.
- Piping work should be done within the maximum length, height difference, and length after branches set out in "**Air tight test and vacuum drying**".
- Install the refrigerant branch kit while observing the following condition and referring to the installation manual offered as an accessory of the kit.

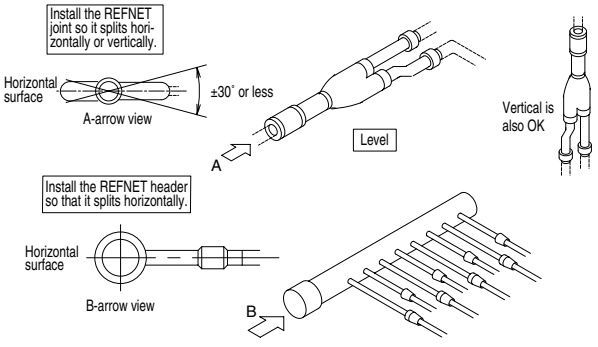

3.1.3 Protection against contamination when installing pipes

- Wrap the piping to prevent moisture, dirt, dust, etc. from entering the piping.
- Exercise caution when passing copper piping through the through-holes and when passing them out to the outside.

Place	Installation period	Protection method
Outdoor	More than a month	Pinch the pipe
	Less than a month	Pinch or tape the pipe
Indoor	Regardless of the period	

3.1.4 Pipe connection

- See "Shutoff valve operation procedure" in "**Air tight test and vacuum drying**" regarding handling of the shutoff valve.
- Only use the flare nuts included with the unit. Using different flare nuts may cause the refrigerant to leak.
- **Be sure to perform a nitrogen blow when brazing.** (Brazing without performing nitrogen replacement or releasing nitrogen into the piping will create large quantities of oxidized film on the inside of the pipes, adversely affecting valves and compressors in the refrigerating system and preventing normal operation.)

Note

The nitrogen used when brazing while flowing the nitrogen should be set to 0.02 MPa (0.2 kg/cm^2: just enough to feel a breeze on your cheek) with the decompression valve.

- Do not mix any refrigerant other than that specified into the refrigerant system.
- Do not mix air into the refrigerant system.

Caution

Do not use a flux when brazing the refrigerant pipe joints.
Use phosphor copper brazing (BCuP-2: JIS Z 3264/B-Cu93P- 710/795: ISO 3677) which does not require flux.
(Using a chlorine flux may cause the pipes to corrode, and if it contains fluoride it may cause the refrigerant lubricant to deteriorate, adversely affecting the refrigerant piping system.)

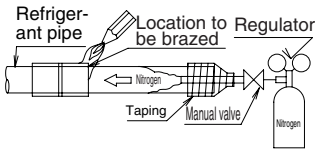

3.1.5 Connecting the refrigerant piping

- The local interunit piping is connectable in four directions.

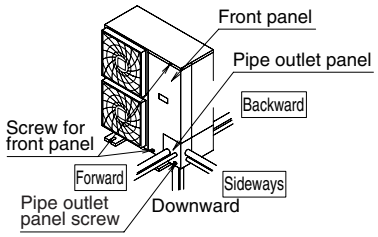

- When connecting in a downward direction, make four round holes using a 6-mm diameter drill in the central section around the knock hole and open the knock hole.

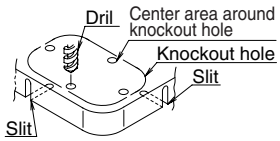

- After knocking out the knock-out, it is recommended to apply repair paint to the edge and the surrounding end surfaces to prevent rusting.

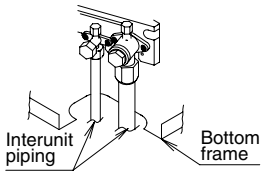

Note

Cutting out the two slits makes it possible to install as shown in above figure. (Use a metal saw to cut out the slits.)

<Precautions when connecting pipes>

- Please refer to the Table 1 for the dimensions for processing flares.
- When connecting the flare nut, coat the flare both inside and outside with refrigerating machine oil and initially tighten by hand 3 or 4 turns before tightening firmly.
- Please refer to the Table 1 for the tightening torque. (Too much tightening will end up in splitting of the flare.)

Table 1

Pipe size	Tightening torque (N·m)	A dimensions for processing flares (mm)	Flare shape
ϕ9.5	32.7~39.9	12.6~13.0	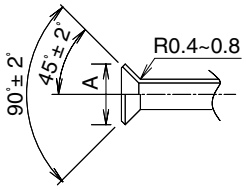
ϕ15.9	61.8~75.4	19.3~19.7	
ϕ19.1	97.2~118.6	23.3~23.7	

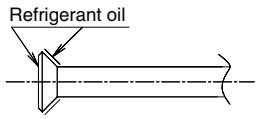

- If a torque wrench is not available, there is a place where the tightening torque will suddenly increase if a normal wrench is used to tighten the flare nut. From that position, further tighten the flare nut the angle shown below.

Pipe size	Pipe size Further tightening angle	Recommended arm length of tool
ϕ9.5	60°~ 90°	Approx. 200 mm
ϕ15.9	30°~ 60°	Approx. 300 mm
ϕ19.1	20°~ 35°	Approx. 450 mm

- After all the piping has been connected, use nitrogen to perform a gas leak check.

Q6 type

[1]

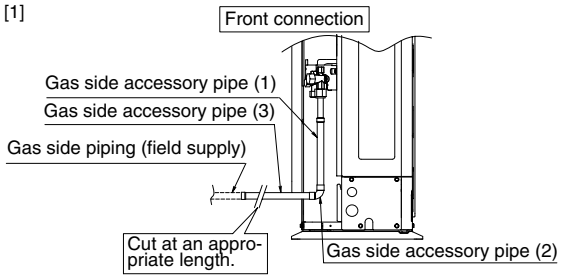

[2]

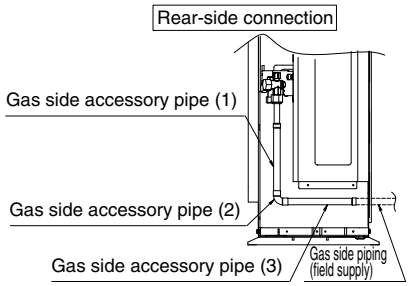

13

[3]

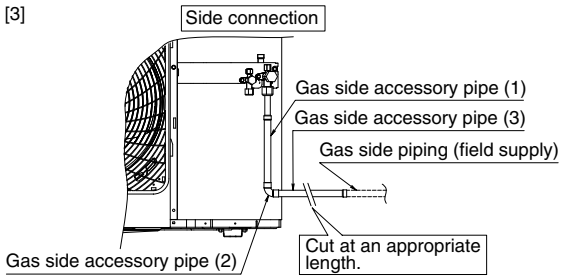

[4]

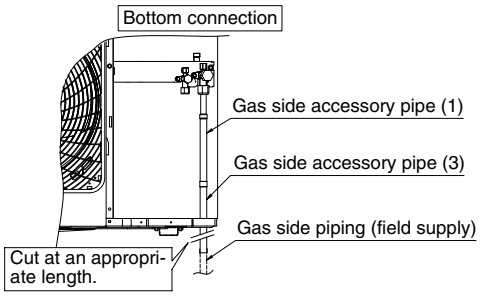

Precautions for connecting pipes

- Be careful not to let the interunit piping come into contact with the compressor terminal cover.
  Adjust the height of the insulation material on liquid pipe when it has the possibility of getting in contact with the terminal. Also make sure that the interunit piping does not touch the mounting bolt of the compressor.

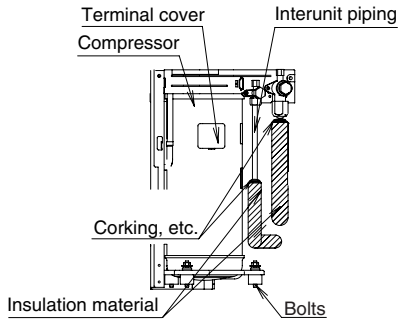

- If installing the outdoor unit higher than the indoor unit, caulk the space around insulation and tubes because condensation on the check valve can seep through to the indoor unit side.

[Preventing foreign objects from entering]

- Plug the pipe through-holes with putty or insulating material (procured locally) to stop up all gaps, as shown in figure below.
  (Insects or small animals entering the outdoor unit may cause a short in the control box.)

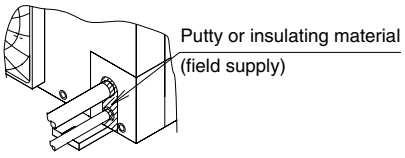

3.1.6 Heat insulation of piping

- If you think the humidity inside the ceiling might exceed 30°C and RH80%, reinforce the insulation on the cooling piping. (At least 20 mm thick) (Condensation may form on the surface of the insulation.)
- Be sure to insulate the interunit piping (liquid and gas-side) and the refrigerant branch kit. (Not insulating them may cause leaking.)

(The highest temperature that the gas-side piping can reach is around 120°C, so be sure to use insulating material which is very resistant.)

Caution

For local insulation, be sure to insulate all the way to the pipe connections inside the machine.
Exposed piping may cause leaking or burns on contact.

3.1.7 Air tight test and vacuum drying

After doing the piping, perform the following inspections.

Air tight test

Be sure to use nitrogen gas. (See the figure (“Shutoff valve operation procedure”) for the location of the service port.)

[Procedure]
Pressurize from the liquid pipes and gas pipes to 4.0 MPa (and not above 4.0 MPa). If there is not pressure drop over the next 24 hours, the equipment has passed the test.
If the pressure drops, check for leakage positions. (Confirm that there is no leakage, then release nitrogen.)

Vacuum drying

Use a vacuum pump that can create a vacuum down to at least–**100.7 kPa** (**5 torr, –755 mmHg)**.

[Procedure]
Operate the vacuum pump for **at least 2 hours** from **both the liquid and gas pipes** and decrease the pressure to at least –100.7 kPa.
Leave at below –100.7 kPa for at least 1 hour and make sure that the vacuum gauge does not rise. (If it does rise, there is either still moisture in the system or a leak.)

Cases where moisture might enter the piping (i.e., if doing work during the rainy season, if the actual work takes long enough that condensation may form on the inside of the pipes, if rain might enter the pipes during work, etc.)
After performing the vacuum drying for 2 hours, pressurize to 0.05 MPa (i.e., vacuum breakdown) with nitrogen gas, then depressurize down to at least –100.7 kPa for an hour using the vacuum pump (vacuum drying). (If the pressure does not reach at least –100.7 kPa even after depressurizing for at least 2 hours, repeat the vacuum breakdown - vacuum drying process.) Leave as a vacuum for 1 hour after that, and make sure the vacuum gauge does not rise.

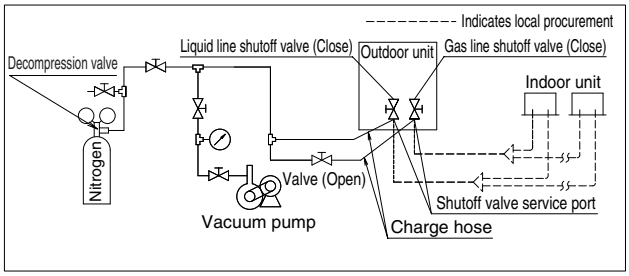

Note

The shutoff valve must always be turned to “closed”. Otherwise the refrigerant in the outdoor unit will pour out.

Shutoff valve operation procedure

Precautions when handling the shutoff valve

- The names of parts needed to operate the shutoff valve are shown in the figure below. The unit is shipped from the factory with the shutoff valve turned to the “closed” position.

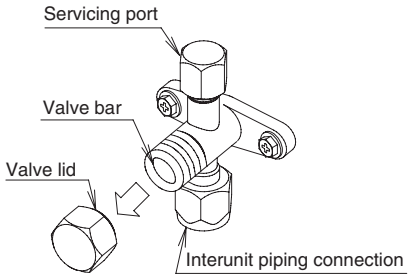

- Since the side boards may be deformed if only a torque wrench is used when loosening or tightening flare nuts, always lock the shutoff valve with a wrench and then use a torque wrench.
- In cases where the unit is run in heating mode when the outside temperature is low or in other situations where the operating pressure might drop, seal the gas-side flare nut on the shutoff valve with silicon sealant or the like to prevent it from freezing.

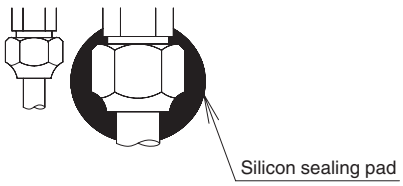

(Make sure that there is no gap)

Shutoff valve operation procedure

Have a hex wrench ready (size: 4 mm and 6 mm).

Opening the valve

1. Place the hex wrench on the valve bar and turn counter-clockwise.
2. Stop when the valve bar no longer turns. It is now open.

Close the valve

1. Place the hex wrench on the valve bar and turn clockwise.
2. Stop when the valve bar no longer turns. It is now closed.

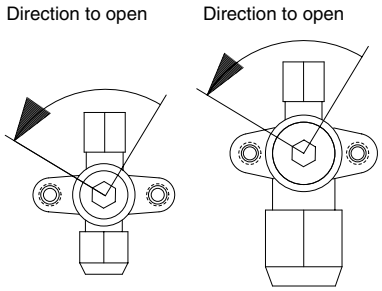

Precautions for handling valve lid

- A seal is attached to the point indicated by the arrow. Take care not to damage it.

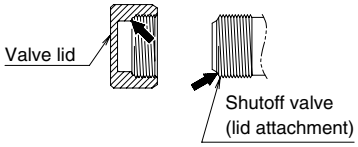

- Be sure to tighten the valve lid securely after operating the valves.

Liquid-side tightening torque	Gas-side tightening torque
13.5 ~ 16.5 N·m	22.5 ~ 27.5 N·m

Precautions for handling servicing port

- Use a push-rod-provided charging hose for operation.
- Be sure to tighten the valve lid securely after operation. Tightening torque ..... 10.8 ~ 14.7 N·m

13

4. REFNET Pipe System

4.1 REFNET Pipe System

4.1.1 REFNET Joint

KHRP26M22T

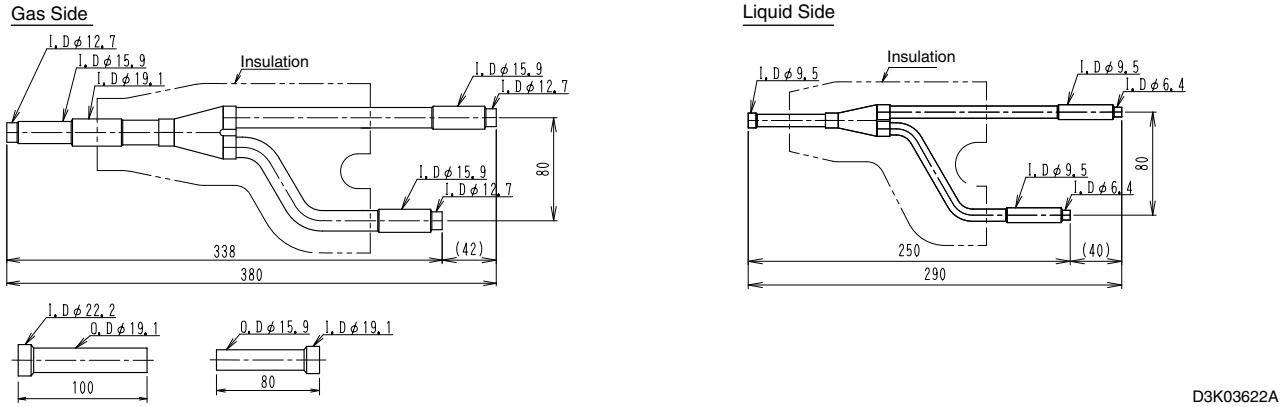

4.1.2 REFNET Header

KHRP26M22H

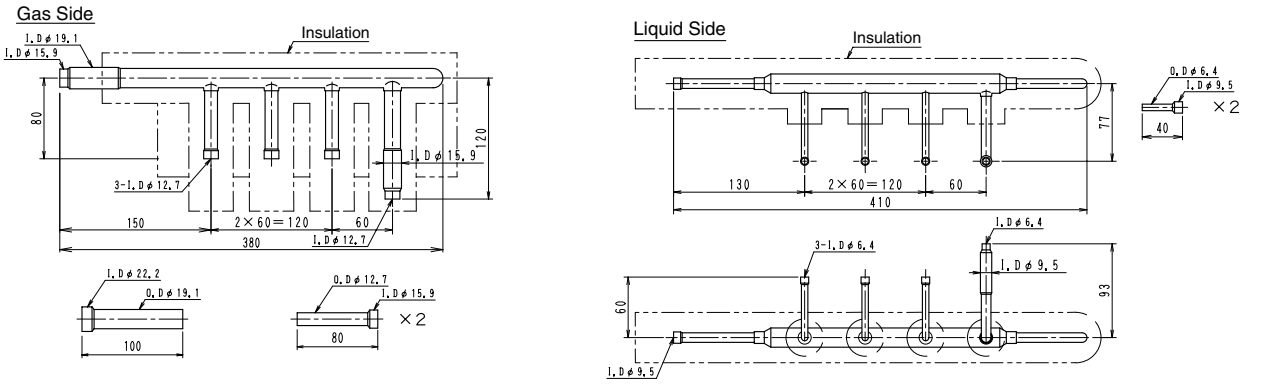

KHRP26M33H

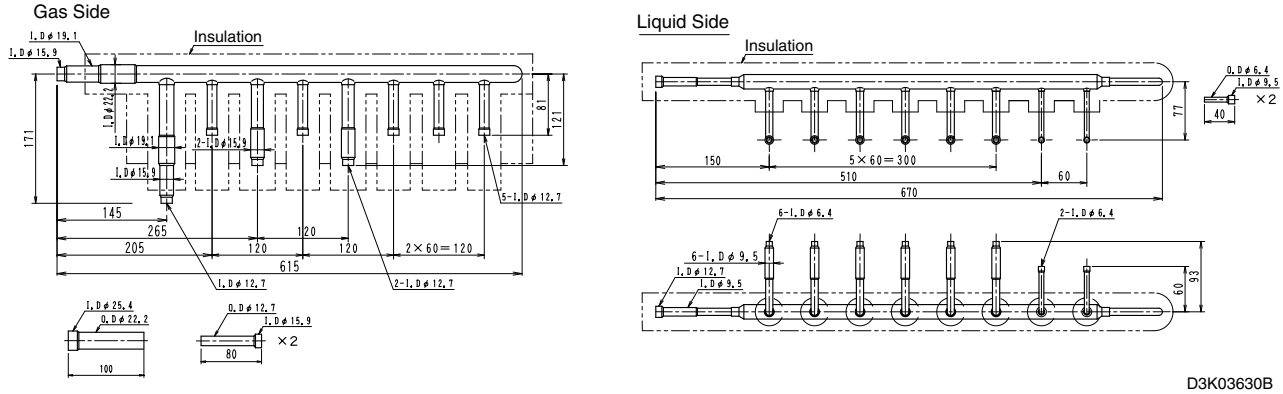

Example of connection (Connection of 8 indoor units, Heat pump system)			Branch with refnet joint	Branch with refnet joint and refnet header	Branch with refnet header
			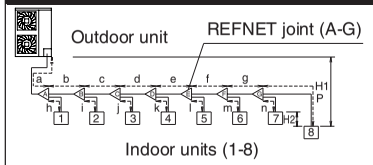	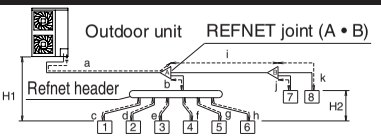	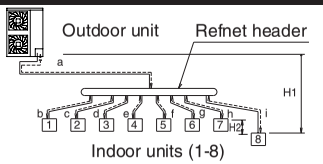
Maximum allowable length	Between outdoor and indoor units	Actual pipe length	Pipe length between outdoor and indoor units ≤ 150m		
			Example unit 8: a + b + c + d + e + f + g + p ≤ 150m	Example unit 6: a + b + h ≤ 120m, unit 8: a + i + k ≤ 150m	Example unit 8: a + i ≤ 150m
		Equivalent length	Equivalent pipe length between outdoor and indoor units ≤ 175m (assume equivalent pipe length of refnet joint to be 0.5m, that of refnet header to be 1m, calculation purposes)		
		Total extension length	Total piping length from outdoor unit to all indoor units ≥10m, ≤ 300m		
Allowable height length	Between outdoor and indoor units	Difference in height	Difference in height between outdoor and indoor units (H1) ≤ 50m (Max 40m if the outdoor unit is below)		
	Between indoor and indoor units	Difference in height	Difference in height between adjacent indoor units (H2) ≤ 15m		
Allowable length after the branch		Actual pipe length	Pipe length from first refrigerant branch kit (either refnet joint or refnet header) to indoor unit ≤ 40m		
			Example unit 8: b + c + d + e + f + g + p ≤ 40m	Example unit 6: b + h ≤ 40m, unit 8: i + k ≤ 40m	Example unit 8: i ≤ 40m

Refrigerant branch kit selection

Refrigerant branch kits can only be used with R-410A.

Use refnet joint from the following table.

Outdoor unit capacity type	Refrigerant branch kit name
RX(Y)MQ4,5, 6 type	KHRP26M22T

How to select the refnet header

- Choose from the following table below the REFNET header according to the number of units on the system.

Outdoor unit capacity type	Refrigerant branch kit name
RX(Y)MQ4, 5, 6 type	KHRP26M22H (Max. 4 branch)
	KHRP26M33H (Max. 8 branch)

Pipe size selection

〈**Caution on selecting connection pipes**〉

- When the equivalent piping length between the outdoor unit and the indoor unit is 90 m or more, make sure to use a thicker pipe as the main pipe on the gas side. When the air-conditioning ability is reduced due to the refrigerant piping distance, a thicker pipe may be used also as the main pipe.

[Gas side]

RXYMQ4,5 type ϕ15.9 → ϕ 19.1

RXYMQ6 type ϕ19.1 → ϕ 22.2

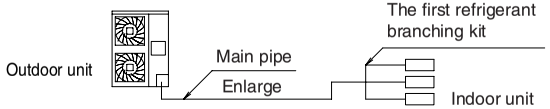

Caution) In brazing connection in the size increase area in the piping, use a different-diameter joint for connection. (The different-diameter joint should be arranged in the local field.)
The connection area is located near the outdoor unit (usually after the first bending outside the unit).

Piping between outdoor unit and refrigerant branch kit

- Match to the size of the connection piping on the outdoor unit.

Outdoor unit connection pipe size (Unit: mm)

Outdoor unit capacity type	Piping size (outer diameter x minimum thickness)	
	Gas pipe	Liquid pipe
RX(Y)MQ4,5 type	ϕ 15.9 x 1.0	ϕ 9.5 x 0.8
	ϕ 19.1 x 1.0 *	
RX(Y)MQ6 type	ϕ 19.1 x 1.0	
	ϕ 22.2 x 1.0 *	

* When the size is larger

Piping between refrigerant branch kits

- Use the pipe size from the following table.

Connection pipe size (Unit: mm)

Piping size (outer diameter x minimum thickness)	
Gas pipe	Liquid pipe
ϕ 15.9 x 1.0	ϕ 9.5 x 0.8

Between refrigerant branch kit and indoor unit

- Pipe size for direct connection to indoor unit must be the same as the connection size of indoor unit.

Indoor unit connection pipe size (Unit: mm)

Indoor unit capacity type	Piping size (outer diameter x minimum thickness)	
	Gas pipe	Liquid pipe
20 · 25 · 32 · 40 · 50 type	ϕ 12.7 x 0.8	ϕ 6.4 x 0.8
63 · 80 · 100 · 125 type	ϕ 15.9 x 1.0	ϕ 9.5 x 0.8

How to calculate the additional refrigerant to be charged

Additional refrigerant to be charged R (Kg)
R should be rounded off in units of 0.1Kg.

$$R = \left(\text{Total length (m) of liquid piping size at } \phi 9.5\right) \times 0.054 + \left(\text{Total length (m) of liquid piping size at } \phi 6.4\right) \times 0.022$$

Example for refrigerant branch using refnet joint and refnet header

The piping lengths are as at right

a: ϕ9.5 x 30m	d: ϕ9.5 x 13m	g: ϕ6.4 x 10m	j: ϕ6.4 x 10m
b: ϕ9.5 x 10m	e: ϕ6.4 x 10m	h: ϕ6.4 x 20m	k: ϕ6.4 x 9m
c: ϕ9.5 x 10m	f: ϕ6.4 x 10m	i: ϕ9.5 x 10m	

R= 73 × 0.054 + 69 × 0.022 = 5.46 → 5.5

(73 = a+b+c+d+i, 69 = e+f+g+h+j+k)

6. Field Wiring

6.1 Field Wiring

Caution

To the electrician

- Do not operate until refrigerant piping work is completed.
  (If operated before complete the piping work, the compressor may be broken down.)
- Be sure to install an earth leakage circuit breaker.
  (This unit uses an inverter, so install the earth leakage circuit breaker that be capable of handling high harmonics in order to prevent malfunctioning of the earth leakage circuit breaker itself.)

6.1.1 Wiring connection example for whole system

- Electrical wiring work should be done by a certified professional.
- Follow the “Electrical wiring diagram face plate” when carrying out any electrical wiring.
  Only proceed with wiring work after blocking off all power.
- Make sure the ground resistance is no greater than 4Ω.
- Attach a ground-fault circuit interrupter.
- Ground the indoor and outdoor units.
- Do not connect the ground wire to gas pipes, sewage pipes, lightning rods, or telephone ground wires.
  - **Gas pipes:** can explode or catch fire if there is a gas leak.
  - **Sewage pipes:** no grounding effect is possible if hard plastic piping is used.
  - **Telephone ground wires and lightning rods:** dangerous when struck by lightning due to abnormal rise in electrical potential in the grounding.
- Use copper wire.
- When doing the electrical wiring, always shut off the power source before working, and do not turn on the switch until all work is complete.
- This unit has an inverter, so it must be grounded in order to reduce noise and prevent it affecting other appliances, and also to release any electrical build-up in the unit case due to leaked current.
- Do not install a power-factor improving phase-advancing capacitor under any circumstances.
  (Not only will this not improve the power factor, but it might cause a fire.)
- Connect the wire securely using designated wire and fix it with attached clamp without applying external pressure on the terminal parts (terminal for power wiring, terminal for transmission wiring and earth terminal). See **“ How to connect the power supply wiring”**.
- Left-over wiring should not be wrapped and stuffed into the unit.
- To prevent the power wiring from being damaged by the knock hole edges, put it in a wiring pipe or plastic tube to protect it.
- Secure the wiring with the included clamp so that it does not come in contact with the piping or shutoff valve.
  (See “ **How to connect the power supply wiring**”.)

Caution

- Use a power wire pipe for the power supply wiring.
- Outside the unit, make sure the weak electric wiring (i.e. for the remote controller cord, between units, etc.) and the strong electric wiring do not pass near each other, **keeping them at least 50 mm apart**.
- Proximity may cause electrical interference, malfunctions, and breakage.
- Be sure to connect the power wiring to the power wiring terminal block and secure it as described in “**How to connect the power supply wiring**”.
- Interunit wiring should be secured as described in “**Interunit wiring connection procedure**”.
- Secure wiring with clamp (accessory) to avoid contact with piping.
- Make sure the wiring and the front panel do not stick up above the structure, and close the cover firmly.

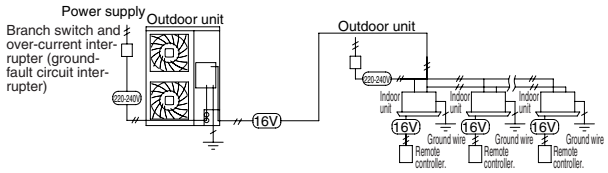

6.1.2 How to lay the power supply wiring and transmission wiring

Pass the power supply wiring (including the ground wire) through the holes on the side, front, or back of the unit. The interunit wiring should be passed through the wiring hole, the piping out-hole, or the knock hole on the front of the unit.

Precautions when knocking out knock holes

- Open the knock holes with a hammer or the like.
- After knocking out the holes, we recommend you remove burrs in the knock holes and paint the edges and areas around the edges using the repair paint to prevent rusting.
- When passing wiring through knock holes, make sure there are no burrs, and protect the wiring with protective tape.

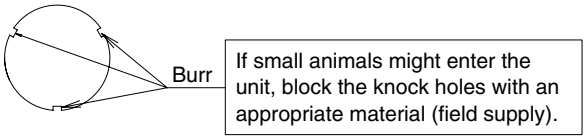

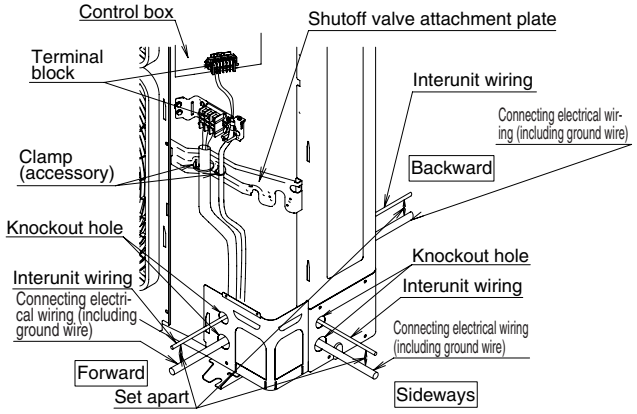

<Precautions when laying power wiring>

- Wiring of different thicknesses cannot be connected to the power terminal block.
  (Slack in the power wiring may cause abnormal heat.)
- Use sleeve-insulated round pressure terminals for connections to the power terminal block. When none are available, connect wire of the same diameter to both sides, as shown in the figure.

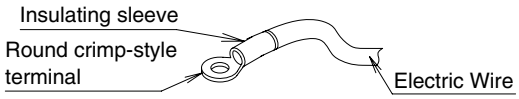

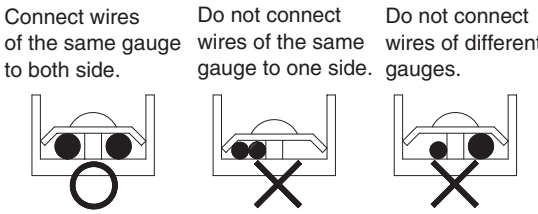

Follow the instructions below if the wiring gets very hot due to slack in the power wiring.

- For wiring, use the designated power wire and connect firmly, then secure using the included clamping material to prevent outside pressure being exerted on the terminal board.
- Use an appropriate screwdriver for tightening the terminal screws.
  A screwdriver with a small head will strip the head and make proper tightening impossible.
- Over-tightening the terminal screw may break it.

See the table below the tightening torque of the terminal screws.

Tightening torque (N·m)		
M5	Power terminal	2.39~2.91
M4	Shield ground	1.18~1.44
M3	Transmission wiring terminal block	0.8~0.97

6.1.3 How to connect the power supply wiring

Caution

Attach a ground-fault circuit interrupter.

- A ground-fault circuit interrupter is required in order to prevent electric shock and fires.

Model name	Frequency	Voltage	Rated current for fuses	Maximum outdoor unit operating current
RXYMQ4PV4A	~50Hz	230-240V	30A	27.0A
RXYMQ5PV4A	~50Hz	230-240V	30A	27.0A
RXYMQ6PV4A	~50Hz	230-240V	30A	27.0A

Model name	Frequency	Voltage	Rated current for fuses	Maximum outdoor unit operating current
RX(Y)MQ4PVE	~50/60Hz	220-230V/220V	30A	27.0A
RX(Y)MQ5PVE	~50/60Hz	220-230V/220V	30A	27.0A
RX(Y)MQ6PVE	~50/60Hz	220-230V/220V	30A	27.0A

Caution

- The wiring should be selected in compliance with local specifications. See the table above.
- Comply with IEC60245 as regards individual specifications for local power supply wiring.
- Use H05VV as the power supply wiring if a wiring conduit is being used.
- If a conduit cannot be used, then use H07RNF.
- Always turn off the power before doing wiring work.
- Grounding should be done in compliance with local laws and regulations.
- Attach a ground-fault circuit interrupter.
  (This unit has an inverter, so an interrupter capable of handling high frequencies is needed to prevent malfunction of the interrupter itself.)
- As shown in figure below, when connecting the power supply wiring to the power supply terminal block, be sure to clamp securely.
- Once wiring work is completed, check to make sure there are no loose connections among the electrical parts in the control box.

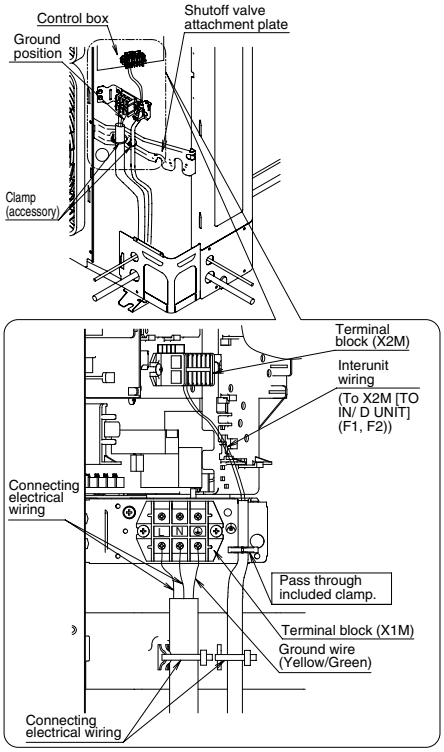

6.1.4 Interunit wiring connection procedure

- Between indoor units in the same system, pass the wiring between the units as shown in figure below. (There is no polarity.)

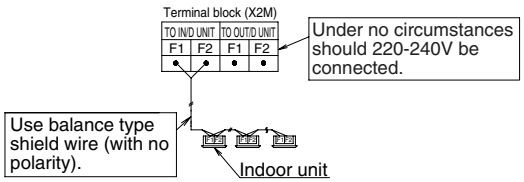

Precautions regarding the length of wiring between units

Exceeding the following limits may cause transmission malfunctions, so observe them.

Max. wiring length	Max. 300 m
Total wiring length	Max. 600 m
Max. no. of branches	9

Precautions regarding wiring between units

- **Do not connect 220-240V power wiring to terminals for the interunit wiring. Doing so would destroy the entire system.**
- Wiring to the indoor unit should be wired to F1 and F2 (TO IN/D unit) on the outdoor unit's terminal block (X2M).
- The interunit wiring should be secured inside the unit and then finished by being wrapped with tape at the same time as the on-site refrigerant piping, as shown in figure below.

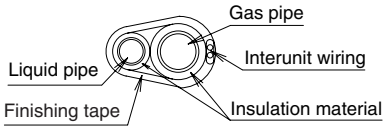

Note

- The above wiring should be wired using 0.75 – 1.25 mm^2 shielded (balance type) wiring.
  (See figure of **6.1.3 How to connect the power supply wiring** for how to ground the shielded parts.)
- All interunit wiring is to be procured on site.

Caution

Up to 9 branches are available in the wiring among units.

Branch after branch cannot perform wiring between units.

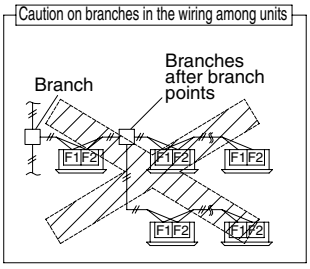

7. Additional Refrigerant Charge

Warning

- Do not use the automatic refrigerant charging function while working on the indoor units.
  When using the automatic refrigerant charging function, the indoor units operate automatically as well as the outdoor unit.
- When leaving the unit with the power on, be sure to switch with another person doing the installation or close the front panel.

7.1 Before Adding Refrigerant

- Make sure the following work and inspection is complete, in accordance with the installation manual.
  - Piping
  - Wiring
  - Airtightness test, Vacuum drying

7.2 Checking the Refrigerant Tank

- Check whether the tank has a siphon pipe before charging and place the tank so that the refrigerant is charged in liquid form.
  (See the figure below.)

Tank with siphon pipe

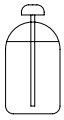

There is a siphon pipe inside, so the cylinder need not be upside-down to fill with liquid.
(Stand the cylinder upright when filling.)

Other tanks

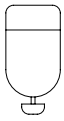

Stand the tank upside down and charge.

7.3 Adding Refrigerant

Warning

When leaving the unit with the power on, be sure to switch with another person doing the installation or close the front panel.

Filling after calculating the amount of refrigerant to add

1. Calculate the amount of refrigerant to add as described in "Calculating the amount of refrigerant to add" in "**PRECAUTIONS ON REFRIGERANT PIPING**".
2. After the vacuum drying is finished, open valve A and charge the calculated amount of refrigerant through the service port for the liquid-side shutoff valve.
3. Close valve A after charging is complete.

Note: If all the refrigerant to be added cannot be charged using the above procedure, right-hand the procedure below and re-charge the refrigerant.

Status of the shutoff valve and other valves when adding refrigerant

- See "Shutoff valve operation procedure" in "**PRECAUTIONS ON REFRIGERANT PIPING**" for details on how to use the shutoff valve.

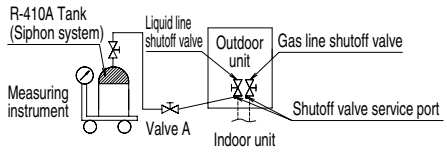

State of valve A and the shutoff valve	Valve A	Liquid line shutoff valve	Gas line shutoff valve
Before starting to charge the refrigerant	Close	Close	Close
During charging of the refrigerant	Open	Close	Close

If all the refrigerant could not be added

Add refrigerant using the following procedure. See the "Service Precautions" plate attached to the control box lid on the outdoor unit for details on the settings for adding refrigerant.

[Procedure]

1. Close the front panel and turn on the power to all outdoor units and indoor units in the refrigeration system.
2. Open the gas and liquid-side shutoff valves all the way and add the refrigerant. (Open valve A immediately after starting the compressor.)
3. Once the appropriate amount of refrigerant is in, press the confirmation button (BS3) on the outdoor unit PC board (A2P), and stop operation after adding the refrigerant.
4. Close valve A after charging is complete.

Status of the shutoff valve and other valves when adding refrigerant operation

- See "Shutoff valve operation procedure" in "**PRECAUTIONS ON REFRIGERANT PIPING**" for details on how to use the shutoff valve.
- Connect the service port (for charging refrigerant) inside the unit. When the unit is shipped from the factory, refrigerant is already charged, so be careful when connecting the charge hose.
- After adding the refrigerant, do not forget to close the lid of the service port (for adding refrigerant). The tightening torque of the lid is 11.5 – 13.9 N/m.

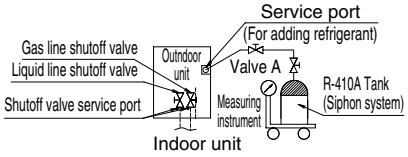

State of valve A and the shutoff valve	Valve A	Liquid line shutoff valve	Gas line shutoff valve
Before starting to charge the refrigerant	Close	Open	Open
During charging of the refrigerant	Open	Open	Open

8. Post-Work Checks

Perform the following checks after work is complete.

(1) Drain pipe connection, removal of transport clasp →
See "**Precautions on Installation**".

(2) Incorrect power supply wiring, loose screws →
See "**How to connect the power supply wiring**".

(3) Incorrect interunit wiring, loose screws →
See "**Interunit wiring connection procedure**".

(4) Incorrect refrigerant piping connections →
See "**Precautions on Refrigerant Piping**".

(5) Piping sizes, use of insulation →
See : "**Selecting piping material**".
"**Heat insulation of piping**".

(6) Shutoff valve check →
Make sure both the liquid-side and gas-side shutoff valves are open.

(7) Record of Amount of Refrigerant Added →
Record it on "Record of Amount of Refrigerant Added" on the "Service Precautions" plate.

(8)Measuring the insulation of the main power circuit →
- Use a 500V mega-tester.
- Do not use the mega-tester for weak currents other than 220- 240V. (Interunit wiring)

Caution

To the pipe-layer

After completing installation, be sure to open the valve. (Operating the unit with the valve shut will break the compressor.)

9. Test Run

This unit is equipped with a crank case heater to ensure smooth startup. Be sure to turn the power on at least 6 hours before operation in order to have power running to the crank case heater.

Warning

When leaving the unit with the power on, be sure to switch with another person doing the installation or close the front panel.

Precautions before turning the power on

- Using insulating sheets, tape electric parts as described in the "Service Precautions" plate on the back of the front panel.
- All indoor units connected to the outdoor unit operate automatically.
  Complete work on the indoor units in order to ensure maximum safety.

9.1 Power On–Check Operation

- Make sure to perform the check operation after installation. (If the air conditioner is operated using the indoor remote controller without performing the check operation, the malfunction code "U3" is displayed in the indoor remote controller, and normal operation is disabled.)
- When making settings on the outdoor unit PC board (A2P) after turning the power on, do not touch anything other than the pushbutton switches and dip switches. (See the "Service Precautions" plate for the locations of the pushbutton switches (BS1-5) and dip switches (D1-1, 2) on the PC board (A2P).)

13

- During the operation, monitor the outdoor unit operation status and check for any incorrect wiring.

1. Close the outdoor unit's front panel. **Turn the power** on for the outdoor unit and the indoor unit.

Caution: Be sure to turn the power on at least 6 hours before operation in order to have power running to the crank case heater.

2. • Open the outdoor unit's front panel.
• Make sure the LED display on the outdoor unit's PC boards (A1P and A2P) are as shown in the following chart.

	A1P	A2P						
LED display (Default status before delivery)	SEVICE MONITOR	MODE	TEST/ HWL	IND	MASTER	SLAVE	L.N.O.P	DEMAND
	HAP	H1P	H2P	H3P	H4P	H5P	H6P	H7P
	◑	●	●	☼	●	●	●	●

LED display: ● OFF ☼ ON ◑ Blinking

⚠ To avoid the risk of electric shock, do not touch anything other than the push-button switches on the PC board (A2P) when making settings.

3. • When the customer requests quiet operation or demand operation, make these settings using the push-button switches (BS1-5) on the outdoor unit's PC board (A2P).
• Operate the push-button switches through the opening after protecting it with an insulation cover. (See the "Service Precautions" plate for details.)

⚠ Use caution to avoid electric shock while working, since the outdoor unit is on.
• Only set the push-button switches (BS1-5) after making sure the microcomputer OK monitor is lit up.
• See the "Service Precautions" plate on the front panel of the outdoor unit for details on how to make the settings. (Do not forget to write the settings down on the "Service Precautions" plate.)
• The dip switch (DS1-1) does not need to be set, so do not touch it. Doing so may cause malfunction.

4. • Check that the liquid and gas-side shutoff valves are open, and if they are closed, open them.

Caution: Do not leave any shutoff valve closed otherwise the compressor will fail.

5. Press the test run button (BS4) for at least five seconds and perform check operation. For details, see "How to perform check operation" on the "Service Precautions" plate.

• If you have to leave the outdoor unit during check operation, either switch with another worker or close the front panel.
• The system operates for about 30 minutes (60 minutes atmaximum) and automatically stops the check operation.
• The system can start normal operation about 3 minutes **after the check operation if** the remote controller does not display any error code. The remote controller will show the test run display during check operation.

6. Close the outer panel of the outdoor unit after check operation is complete.

<Precautions During Check Operation>

- **If operation is performed within 12 minutes of the indoor and outdoor units being turned on, H2P will light up, and the compressor will not run.** Only perform operation after checking that the LED display is as shown in "**Power On–Check Operation**" 2. table.
- In order to ensure uniform refrigerant distribution, it may take up to around 10 minutes for the compressor to start up after the unit begins running. This is not a malfunction.
- Each indoor unit cannot be checked individually for problems. After this operation is complete, run the unit normally using the remote controller.
- The check run cannot be performed in recovery or other modes.
- If the outlet pipe thermistor (R2T), the intake pipe thermistor (R3T), and the pressure sensors (S1NPH and S1NPL) are removed before operation, the compressor might burn out, so avoid this under all circumstances.

9.2 Temperature Control Operation Checklist

[Set the master unit (the indoor unit with rights of selection cooling or heating)]

<With a wired remote controller>

- After check operation is complete, displays of all the connected remote controllers will flash "Switching mode".
- Ask the customer which indoor unit to set as the master unit. (Setting the most frequently used indoor unit as the master unit is recommended.)
- Press the mode-switch button on the remote controller for the master unit.
- That remote controller will then become the remote controller for switching between cooling and heating.
- All other remote controllers will display "Switching mode".

<With wireless remote controller>

- After check operation is complete, the timer lamps on all the indoor units which are connected will flash.
- Ask the customer which indoor unit to set as the master unit. (Setting the most frequently used indoor unit as the parent unit is recommended.)
- Press the mode-switch button on the remote controller for the master unit. A beeping sound will be emitted and the timer lamps on all the indoor units will go off.
- That indoor unit will be the indoor unit which has the right to switch between cooling and heating. For details, see the operation manual which comes with the unit.

- After check operation is complete, checking the temperature control using normal operation. (Heating is not possible if the outdoor temperature is 24°C or higher. See the included operation manual.)
  (1) Make sure the indoor and outdoor units are operating normally. (If liquid compression by the compressor or other abnormal noises can be heard, stop the unit immediately, heat the crank case for a sufficient amount of time, and try again.)
  (2) Run each indoor unit one at a time and make sure the corresponding outdoor unit is also running.
  (3) Check to see if cold (or hot) air is coming out of the indoor unit.
  (4) Press the fan direction and fan strength buttons on the indoor unit to see if they operate properly.

<Precautions during temperature control checks>

- For around 5 minutes after the compressor stops, the compressor will not run even if the "operate/stop" button on the remote controller is pressed.
- When the system operation is stopped by the remote controller, the outdoor units may continue operating for further 1 minutes at maximum.
- Malfunction code "U3" is displayed if check operation is not performed using the test run button the first time after installation. Perform the check operation in accordance with "**Power On–Check Operation**".

[Remote controller displays malfunction code]
(Check on a remote controller connected to the indoor unit.)

Malfunction code	Installation error	Remedial action
E3	The shutoff valve of an outdoor unit is left closed.	Open the gas-side shutoff valve and the liquid-side shutoff valve.
	Refrigerant overcharge.	Recalculate the required amount of refrigerant from the piping length and correct the refrigerant charge level by recovering any excessive refrigerant with a refrigerant recovery machine.
F6	Refrigerant overcharge.	Recalculate the required amount of refrigerant from the piping length and correct the refrigerant charge level by recovering any excessive refrigerant with a refrigerant recovery machine.
E4	The shutoff valve of an outdoor unit is left closed.	Open the gas-side shutoff valve and the liquid-side shutoff valve.
	Insufficient refrigerant.	Check if the additional refrigerant charge has been finished correctly.
		Recalculate the required amount of refrigerant from the piping length and add an adequate amount of refrigerant.
F3	Refrigerant overcharge.	Recalculate the required amount of refrigerant from the piping length and correct the refrigerant charge level by recovering any excessive refrigerant with a refrigerant recovery machine.
	The shutoff valve of an outdoor unit is left closed.	Open the gas-side shutoff valve and the liquid-side shutoff valve.
	Insufficient refrigerant.	Check if the additional refrigerant charge has been finished correctly.
		Recalculate the required amount of refrigerant from the piping length and add an adequate amount of refrigerant.
U2	Insufficient supply voltage	Check to see if the supply voltage is supplied properly.
U3	If a check operation has not been performed.	Perform a check operation.
U4	No power is supplied to an outdoor unit.	Turn the power on for the outdoor unit.
UA	If no dedicated indoor unit is being used.	Check the indoor unit. If it is not a dedicated unit, replace the indoor unit.
UF	The shutoff valve of an outdoor unit is left closed.	Open the gas-side shutoff valve and the liquid-side shutoff valve.
	If the right indoor unit piping and wiring are not properly connected to the outdoor unit.	Make sure that the right indoor unit piping and wiring are properly connected to the outdoor unit.
UH	If the interunit wiring has not be connected or it has shorted.	Make sure the interunit wiring is correctly attached to terminals (X2M) F1/F2 (TO IN/D UNIT) on the outdoor unit circuit board.

- When using a central controller, see the installation manual or service manual which came with the central controller.

[If nothing is displayed on the remote controller]

- There might be a problem with the connections or communication between the indoor unit and the remote controller.
  Make sure all the wiring is properly connected.

Caution

To the pipe-layer, To the electrician
After the test run, when handing the unit over to the customer, make sure the front panel on the unit and all screws are attached.

13

Part 5
Control

1. Option List of Controllers....375
2. DAIKIN Building Air Conditioning Control System (D-BACS) 376
   - 2.1 System Configuration (Central Remote Controller)....376
   - 2.2 System Configuration (Intelligent Touch Controller)....377
   - 2.3 System Configuration....378
   - 2.4 Various PC Boards....380
3. Control System....381
   - 3.1 Various Control by Liquid Crystal Remote Controller....381
   - 3.2 Building Control System Introduction....388
   - 3.3 Specifications of the Control Wiring....394
   - 3.4 Wiring Example....395
   - 3.5 Length of Transmission Wiring....397
   - 3.6 Branch Wiring....398
4. Control Devices....404
   - 4.1 <BRC1C62> Wired Remote Controller....404
   - 4.2 Wireless Remote Controller / Receiver....408
   - 4.3 <DCS302CA61> Central Remote Controller....411
   - 4.4 <DCS301BA61> Unified ON/OFF Controller....439
   - 4.5 <DST301BA61> Schedule Timer....447
   - 4.6 <DCS302CA61 / DCS301BA61 / DST301BA61> Combinations of Optional Controllers for Centralized Control....455
   - 4.7 <DCS601C51> intelligent Touch Controller....458
   - 4.8 <BRC1D61> Wired Remote Controller with Weekly Schedule Timer....472
   - 4.9 <DAM602B51 / DAM602B52> Intelligent Manager III....481
5. Adaptor....492
   - 5.1 <DCS302A52> Unification Adaptor for Computerized Control....492
   - 5.2 <KRP2A61 / KRP2A62 / KRP2A53> Wiring Adaptor for Electrical Appendices (1)....496
   - 5.3 <KRP4A51 / KRP4A52 / KRP4A53 / KRP4A54> Wiring Adaptor for Electrical Appendices (2)....503
   - 5.4 <DTA102A52> Interface Adaptor for SkyAir Series....509
   - 5.5 <DTA107A55> Central Control Adaptor Kit....512
   - 5.6 <DTA103A51> Wiring Adaptor for Other Air Conditioners....516
   - 5.7 <DTA104A61 / DTA104A62 / DTA104A53> External Control Adaptor for Outdoor Unit (Must be Installed on Indoor Units)....520
   - 5.8 <KRP1B61 / KRP1B56 / KRP1B59> Adaptor for Wiring....528
   - 5.9 <KRP1C3> Adaptor for Wiring....530
   - 5.10 <KRCS01-1> Remote Sensor....531
   - 5.11 <DTA109A51> DIII NET Expander Adaptor....532
6. Control Functions....535
   - 6.1 <BRC1C62> Wired Remote Controller....535
   - 6.2 <BRC4C, 7C, 7E> Wireless Remote Controller....543
   - 6.3 <BRC2C51 (BRC2A51)> Simplified Remote Controller....546

6.4 <BRC3A61> Remote Controller for Hotel Use 548
6.5 <KRC19-26A> Cool / Heat Selector for Outdoor Units 549

1. Option List of Controllers

Operation Control System Optional Accessories

No.	Item / Type			FXCQ-M	FXFQ-M	FXKQ-MA	FXDQ-N(A) FXDQ-P	FXUQ-MA	FXSQ-M	FXMQ-MA	FXHQ-M	FXAQ-MA	FXLQ-MA FXNQ-MA
1	Remote controller	Wireless	H/P	BRC7C62	BRC7E61W	BRC4C61	BRC4C62	BRC7C528W	BRC4C62		BRC7E63W	BRC7E618	BRC4C62
			C/O	BRC7C67	BRC7E65	BRC4C63	BRC4C64	BRC7C529W	BRC4C64		BRC7E66	BRC7E619	BRC4C64
		Wired		BRC1C62									
2	Wired remote controller with weekly schedule timer			BRC1D61									
3	Simplified remote controller			—			Note 8 BRC2C51	—	Note 8 BRC2C51		—		Note 8 BRC2C51
4	Remote controller for hotel use			—			BRC3A61	—	BRC3A61		—		BRC3A61
5	Adaptor for wiring			∗ KRP1B61	∗ KRP1B59	KRP1B61	∗ KRP1B56	—	KRP1B61		KRP1C3	—	KRP1B61
6-1	Wiring adaptor for electrical appendices (1)			∗ KRP2A61	∗ KRP2A62	KRP2A61	∗ KRP2A53	∗ KRP2A62	KRP2A61		∗ KRP2A62	∗ KRP2A61	KRP2A61
6-2	Wiring adaptor for electrical appendices (2)			∗ KRP4A51	∗ KRP4A53	KRP4A51	∗ KRP4A54	∗ KRP4A53	KRP4A51		∗ KRP4A52	∗ KRP4A51	KRP4A51
7	Remote sensor			KRCS01-1	—	KRCS01-1							
8	Installation box for adaptor PCB			Note 2, 3 KRP1B96	Note 2, 3 KRP1D98	—	Note 4, 6 KRP1B101	KRP1B97	Note 5 KRP4A91	—	Note 3 KRP1C93	Note 2, 3 KRP4A93	—
9	Central remote controller			DCS302CA61									
9-1	Electrical box with earth terminal (3 blocks)			KJB311A									
10	Unified ON/OFF controller			DCS301BA61									
10-1	Electrical box with earth terminal (2 blocks)			KJB212A									
10-2	Noise filter (for electromagnetic interface use only)			KEK26-1									
11	Schedule timer			DST301BA61									
12	External control adaptor for outdoor unit (Must be installed on indoor units)			∗ DTA104A61	∗ DTA104A62	DTA104A61	∗ DTA104A53	—	DTA104A61		∗ DTA104A62	∗ DTA104A61	DTA104A61
13	Interface adaptor for SkyAir-series			—	—	—	—	Note 7 DTA102A52	—	—	—	—	—

Note:

1. Installation box (No.8) is necessary for each adaptor marked ∗.
2. Up to 2 adaptors can be fixed for each installation box.
3. Only one installation box can be installed for each indoor unit.
4. Up to 2 installation boxes can be installed for each indoor unit.
5. Installation box (No. 8) is necessary for second adaptor.
6. Installation box (No. 8) is necessary for each adaptor.
7. This adaptor is required when connecting with optional controller for centralized control.
8. BRC2A51 is also available.

Various PC Boards

No.	Part name	Model No.	Function
1	Adaptor for wiring	KRP1B56 KRP1B57 KRP1B59 KRP1B61 KRP1C3	■ PC board when equipped with auxiliary electric heater in the indoor unit.
2	DIII-NET Expander Adaptor	DTA109A51	■ Up to 1,024 units can be centrally controlled in 64 different groups. ■ Wiring restrictions (max. length: 1,000 m, total wiring length: 2,000 m, max. number of branches: 16) apply to each adaptor.

2. DAIKIN Building Air Conditioning Control System (D-BACS)

2.1 System Configuration (Central Remote Controller)

- Up to 64 groups of indoor units (128 units) can be centrally controlled.
- Optional controllers for centralized control can be combined freely, and system can be designed in accordance with building scale and purpose.
- Wiring can be run up to a total length of 2 km, and adapts easily to large-scale system expansion.

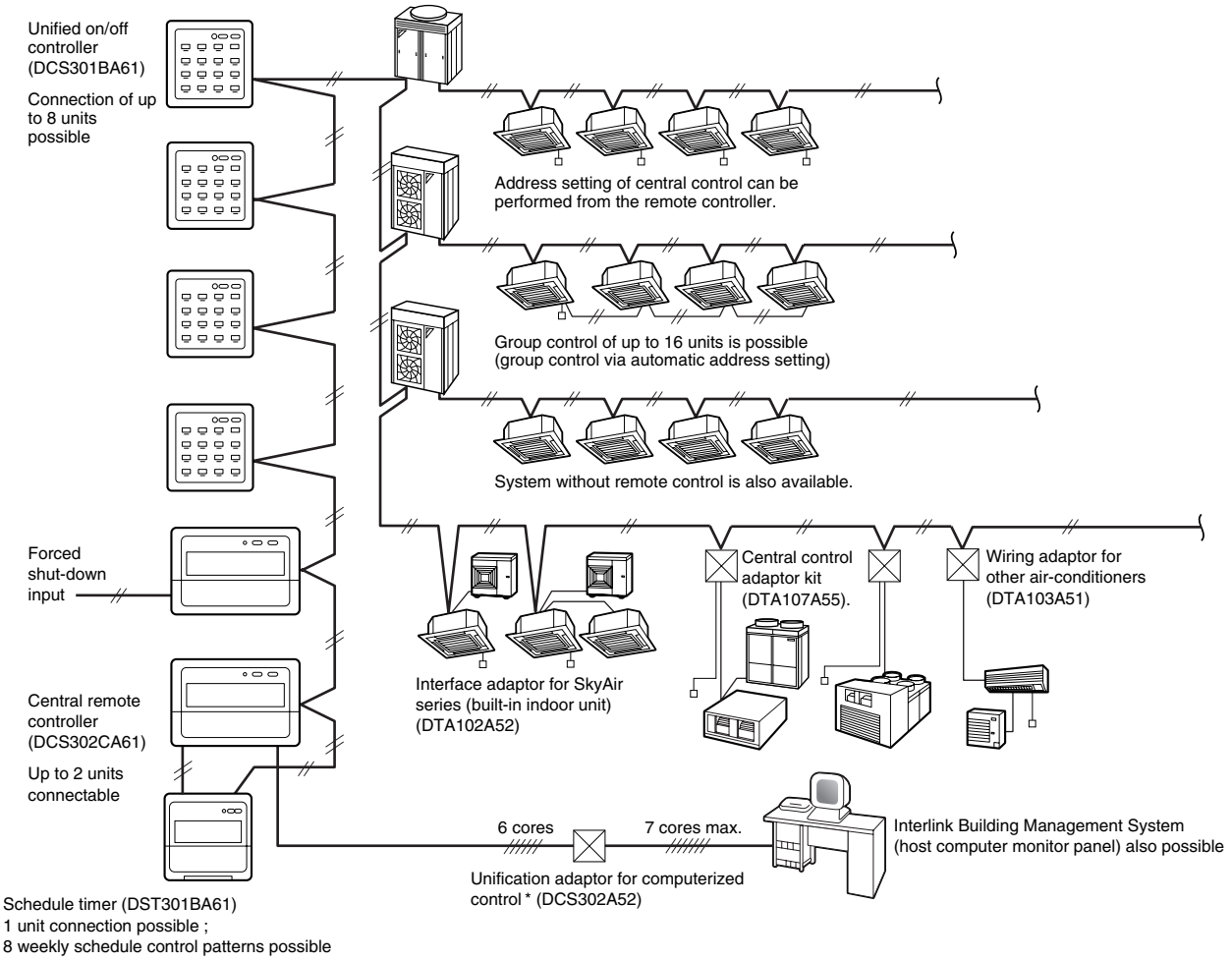

No.	Part Name	Model No.	Function
1	Central Remote Controller	DCS302CA61	Up to 64 groups of indoor units (128 units) can be connected, and on/off, temperature setting and monitoring can be accomplished individually or simultaneously. Connectable up to 2 sets into one system.
2	Unified ON/OFF Controller	DCS301BA61	Up to 16 groups of indoor units (128 units) can be turned, on/off individually or simultaneously, and operation and malfunction can be displayed. Can be used in combination with up to 8 controllers.
3	Schedule Timer	DST301BA61	Programmed time weekly schedule can be controlled by unified control for up to 64 groups of indoor units (128 units). Can turn units on/off twice per day.
4	Unification Adaptor for Computerized Control	∗ DCS302A52	Used to combine host computer monitor panel and central remote controller (on/off, display).
5	Interface Adaptor for SkyAir Series	∗ DTA102A52	Used to connect SkyAir series with optional controllers for centralized control.
6	Wiring Adaptor for Other Air-Conditioner	∗ DTA103A51	Used to connect with other air-conditioners other than VRV system or SkyAir series with optional controllers for centralized control.

Note:

Installation box for ∗ adaptor must be procured on site.

2.2 System Configuration (Intelligent Touch Controller)

■ This controller is a central remote controller offering higher functions than those of the previous central remote controller DCS302CA61, and easier operation.
Up to 64 groups of indoor units may be connected to 1 unit of this controller.

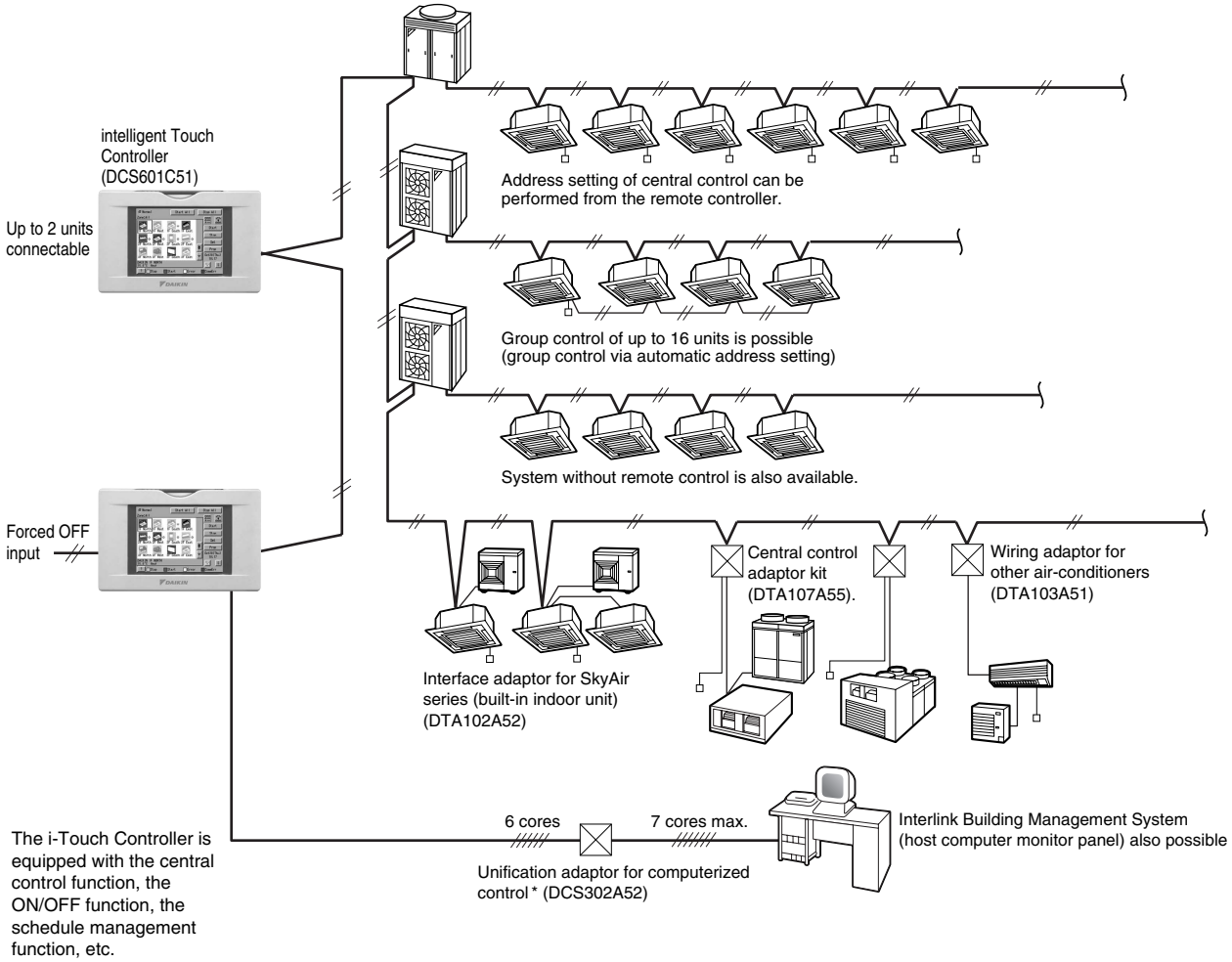

No.	Part Name	Model No.	Function
1	intelligent Touch Controller	DCS601C51	Up to 64 groups of indoor units (128 units) can be connected, and on/off, temperature setting and monitoring can be accomplished individually or simultaneously. Connectable up to 2 sets into one system.

2.3 System Configuration

By combining the various control equipment flexibly, you can construct the sophisticated central control system to meet any size and design of the building.

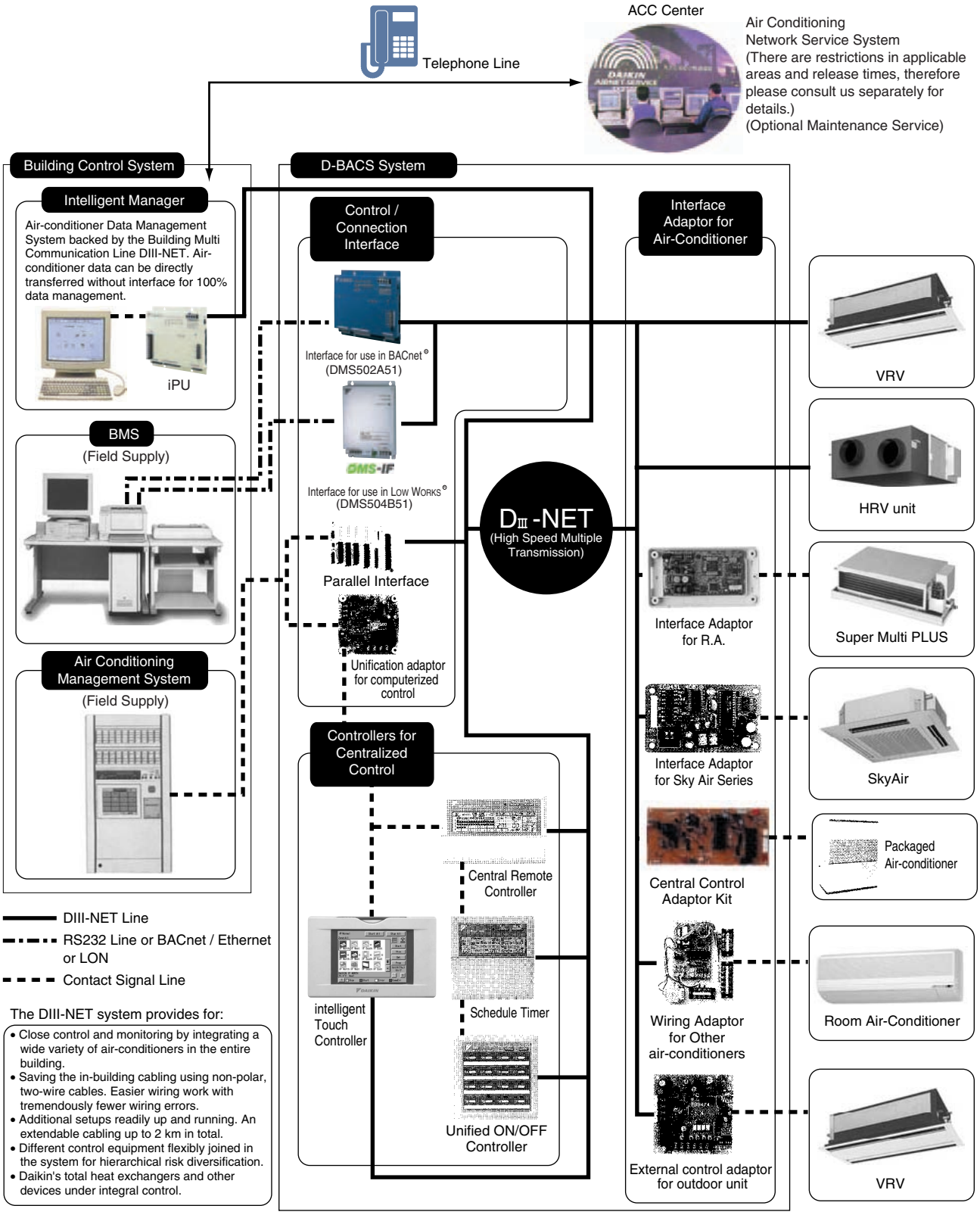

Caution

Control functions may be different from model to model.

For trouble-free control systems, it is advisable to discuss your projects at hand. Please contact us at your planning stage.

(V2299)

System Configuration

No.	Part name	Model No.	Function
1	Central remote controller	DCS302CA61	■ Up to 64 groups of indoor units (128 units) can be connected, and ON/OFF, temperature setting and monitoring can be accomplished individually or simultaneously. Connectable up to "2" controllers in one system.
2	Unified ON/OFF controller	DCS301BA61	■ Up to 16 groups of indoor units (128 units) can be turned, ON/OFF individually or simultaneously, and operation and malfunction can be displayed. Can be used in combination with up to 8 controllers.
3	Schedule timer	DST301BA61	■ Programmed time weekly schedule can be controlled by unified control for up to 64 groups of indoor units (128 units). Can turn units ON/OFF twice per day.
4	Unification adaptor for computerized control	*DCS302A52	■ Interface between the central monitoring board and central control units
5	Interface adaptor for SkyAir-series	*DTA102A52	■ Adaptors required to connect products other than those of the VRV System to the high-speed DIII-NET communication system adopted for the VRV System. ■ To use any of the above optional controllers, an appropriate adaptor must be installed on the product unit to be controlled.
6	Central control adaptor kit	*DTA107A55	
7	Wiring adaptor for other air-conditioner	*DTA103A51	
8	DIII-NET Expander adaptor	DTA109A51	■ Up to 1,024 units can be centrally controlled in 64 different groups. ■ Wiring restrictions (max. length : 1,000m, total wiring length : 2,000m, max. number of branches : 16) apply to each adaptor.
9	Mounting plate	KRP4A92	■ Fixing plate for DTA109A51

Note:

Installation box for * adaptor must be procured on site.

Building Management System

No.	Part name				Model No.	Function
1	intelligent Touch Controller	basic	Hardware	intelligent Touch Controller	DCS601C51	• Air-Conditioning management system that can be controlled by a compact all-in-one unit.
1-1		Option	Hardware	DIII-NET plus adaptor	DCS601A52	• Additional 64 groups (10 outdoor units) is possible.
1-2			Software	P.P.D.	DCS002C51	• P.P.D.: Power Proportional Distribution function
1-3				Web	DCS004A51	• Monitors and controls the air conditioning system using the Internet and Web browser application on a PC.
1-4	Electrical box with earth terminal (4blocks)				KJB411A	• Wall embedded switch box.
2	intelligent Manager III	Number of units to be connected		128 units	DAM602B52	Air conditioner management system (featuring minimized engineering) that can be controlled by personal computers.
				256 units	DAM602B51	
				512 units	DAM602B51x2	
				768 units	DAM602B51x3	
				1024 units	DAM602B51x4	
2-1		Option	Software	P.P.D.	DAM002A51	• P.P.D.: Power Proportional Distribution function.
				ECO.	DAM003A51	Software for energy-saving control.
2-2	Communication Line	Optional DIII Ai unit			DAM101A51	Analog input for "sliding temperature" function (to reduce cold shock) for intelligent Manager III.
3		*2 Interface for use in BACnet®			DMS502A51	Interface unit to allow communications between VRV and BMS. Operation and monitoring of air-conditioning systems through BACnet® communications.
3-1		Optional DIII board			DAM411A1	Expansion kit, installed on DMS502A51, to provide 3 more DIII-NET communication ports. Not usable independently.
3-2		Optional Di board			DAM412A1	Expansion kit, installed on DMS502A51, to provide 16 more wattmeter pulse input points. Not usable independently.
4		*3 Interface for use in Lon Works®			DMS504B51	Interface unit to allow communications between VRV and BMS. Operation and monitoring of air-conditioning systems through LON WORKS® communication.
5	Contact/Analog signal	Parallel interface	Basic unit		DPF201A51	Enables ON/OFF command, operation and display of malfunction; can be used in combination with up to 4 units.
6			Temperature measurement units		DPF201A52	Enables temperature measurement output for 4 groups; 0-5VDC.
7			Temperature setting units		DPF201A53	Enables temperature setting input for 16 groups; 0-5VDC.
8		Unification adaptor for computerized control			DCS302A52	Interface between the central monitoring board and central control units
9-1		Wiring adaptor for electrical appendices (1)			KRP2A53, 61, 62	Simultaneously controls air-conditioning control computer and up to 64 groups of indoor units.
9-2		Wiring adaptor for electrical appendices (2)			KRP4A51-54	To control the group of indoor units collectively, which are connected by the transmission wiring of remote controller.
13		External control adaptor for outdoor unit (Must be installed on indoor units.)			DTA104A53, 61, 62	Cooling/Heating mode change over. Demand control and Low noise control are available between the plural outdoor units.

Note:

*1. PPD does not support Connection Unit Series.

*2. BACnet® is a registered trademark of American Society of Heating, Refrigerating and Air-Conditioning Engineers (ASHRAE).

*3. LONWORKS® is a registered trade mark of Echelon Corporation.

14

2.4 Various PC Boards

Besides the central control system and building control system of the previous page, you can enhance control function by mounting various PC boards on indoor and outdoor units.

■ Adaptor for Wiring

The model of adaptor for wiring depends on the type of indoor unit.

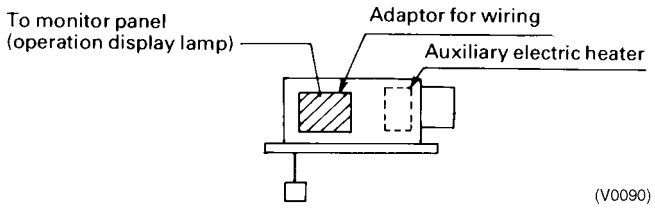

Part Name	Model No.	Function
Adaptor for Wiring	KRP1B56, 57, 59, 61 KRP1C3	PC board when equipped with auxiliary electric heater or humidifier in the indoor unit.

3. Control System

3.1 Various Control by Liquid Crystal Remote Controller

For more effective localized environmental control Daikin offers various control systems such as single or double remote control or centralized control. This enables the construction of a variety of operational control systems which can be adapted for various uses from remote control to building automation.

Control Method		Objective / Use	Unit Name and Model	Function	Standard Number of Units	
Control by Remote Controller	Local operation of remote controller	Example of typical use	**BRC1C62**  **BRC2C51**  Connected to indoor units ■ For group control it is connected to 1 unit out of the group ■ In the case of control by 2 remote controllers both controllers are connected to the indoor unit	**Operational functions** ■ Start/Stop (ON/OFF) ■ Operation Mode Selection ■ Temperature setting ■ Timer setting (Settings in units of 1 hour up to a maximum of 72 hours) ■ Air flow setting ■ Air flow direction adjustment (Swing flap) ■ Ventilation Mode Selection ■ Ventilation Air flow Selection **Indication function** ■ Operating display ■ Program dry function display ■ Defrost/Hot start display ■ Filter sign ■ Temperature setting display ■ Timer display ■ Air flow display ■ Abnormal operation display ∗ In case of group control all the indoor units in the system are set to the same value and each unit is controlled individually by its internal thermostat. (Not by the thermostat equipped in remote controller) In commond case of double remote control the last command priority. (Selection between main and sub controller is essential)	1 remote controller controls 1 indoor unit	
	Remote operation of remote controller	For control from distant place				
	2 remote control	For control from 2 places (distant or local)			2 remote controllers control 1 indoor unit	
	Group control ∗1	For the control of plural indoor units on a floor at the same time			1 remote controller controls up to 16 indoor units simultaneously	
	∗1 Group control by 2 remote controllers	For above control from distant place.			2 remote controllers control up to 16 indoor units from 2 different places simultaneously	
	Forced OFF command from outside	Forced OFF for forgetting to turn equipment off, or in times of an emergency.		■ Forcibly stops indoor unit operation by command from outside. ■ During remote controller group control, input a command from outside to any one of the indoor units.	Same as the number of units controlled by remote controller	

∗1 In case of group control, the remote controller used as master control must be selected with auto-swing function (BRC1A61). When the group has cassette (FXC (Q)), FXF (Q)) or ceiling suspended (FXH (Q)) or cassette corner (FXK (Q)) or wall mounted (FXA (Q)) models.

	Outline of System	Relevant Page Number
		404
	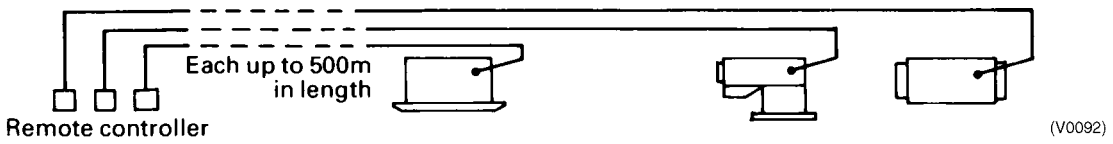	404
	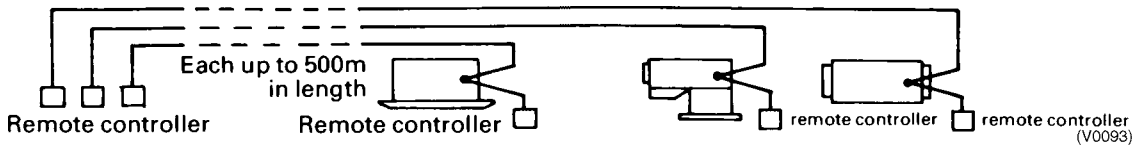	404
	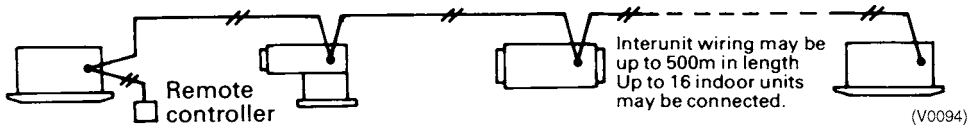	405
	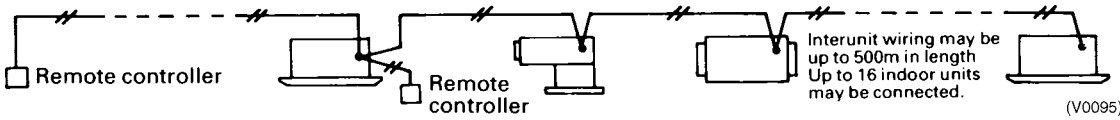	405
	● For local operation of remote controller 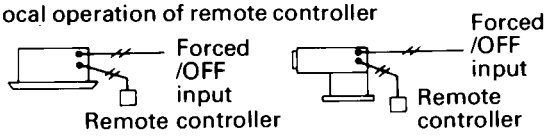 ● For group control 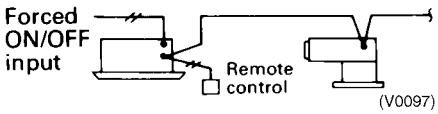	405

14

	Control Method	Objective / Use	Unit Name and Model	Function	Standard Number of Units	
Central Control	intelligent Touch Controller	For control all indoor units just like remote controller	**DCS601C51** 	■ Adds various functions other than the functions of existing central remote controller. ■ Scheduled operation and function to distribute electricity proportionally. ■ Simple handling through a large sized liquid crystal display. ■ Adopts a touch-panel ■ Twin centralized control function ■ AIR-NET Service (optional-failure prediction) ■ Auto Heat/Cool Change Over ■ Temperature Limitation	Controls up to 64 groups (Max. 128 indoor units) with one i-touch Controller.	
	Schedule timer	For carrying out weekly schedule operation by 1-minute units	**DST301BA61** 	■ ON/OFF time can be set by units of day, hour and minute; ON/OFF pattern can be set by time zone of twice per day in accordance with application.	Simultaneously controls 64 groups with one schedule timer. Max. 128 units	
	Central remote controller	For control all indoor units just like remote controller	**DCS302CA61** 	64 groups (zones) of indoor units can be controlled individually same as LCD Remote controller. ■ Max.64 groups (128 indoor units controllable) ■ Max. 128 groups (128 indoor units) are controllable by using 2 central remote controllers, which can control from 2 different places. ■ Zone control ■ Malfunction code display ■ Max. wiring length 1,000 m (Total : 2,000 m) ■ Combination with Unified ON/OFF controller, schedule timer and BMS system ■ Airflow volume and direction can be controlled individually for indoor units in each group operation. ■ Up to 4 Operation/Stop pairs can be set per day by connecting a schedule timer.	Controls up to 64 groups of indoor units with one central remote controller. Max. 128 units	
	Unified ON/OFF controller	For ON/OFF operate all indoor units just like remote controller	**DCS301BA61** 	■ Double central control function ■ Indoor unit ON/OFF control ■ Individual/unified operation ■ Remote controller operation rejected command (Central remote controller given priority when used in combination with central remote controller.) ■ Sequential start function	Controls up to 16 groups of indoor units with one unified ON/OFF controller. Max. 128 units	
	■ Schedule timer ■ Central remote controller ■ Unified ON/OFF controller	For controlling all indoor units from one place	**DST301BA61**  **DCS302CA61**  **DCS301BA61** 	■ Respective functions of schedule timer, central remote controller and unified ON/OFF controller are possible. (Control mode of central remote controller is given priority for operation of remote controller for indoor unit.) ■ Sequential start function	Controls up to 128 groups (Max. 128 indoor units) with one schedule timer, two central remote controller and eight unified ON/OFF controllers.	
	Adaptor for connection with optional controllers for centralized control		■ Unification adaptor for computerized control **DCS302A52** ■ Interface adaptor for SkyAir series **DTA102A52** ■ Wiring adaptor for other air conditioners **DTA103A51**	■ Unification adaptor for computerized control allows you to simultaneously turn indoor units connected to the central remote controller on or off or display at the central monitor panel, etc. ■ Interface adaptor for SkyAir series, wiring adaptor for other air conditioners and wiring adaptor for 'H' indoor unit are for connection of optional controllers for centralized control.	■ Simultaneously controls by one unification adaptor for computerized control, all indoor units connected to a central remote controller. ■ Controls one indoor unit by one interface adaptor for SkyAir series, wiring adaptor for other air conditioners, and wiring adaptor for 'G(J)' indoor unit.	

	Outline of System	Relevant Page Number
	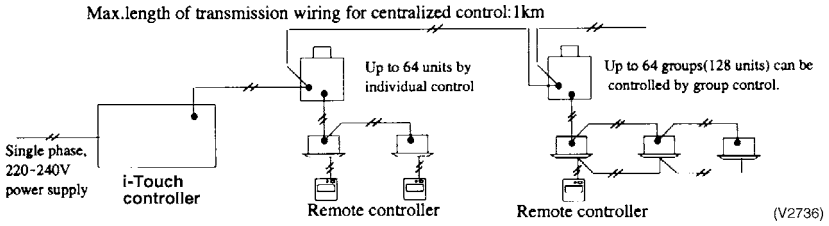	458
	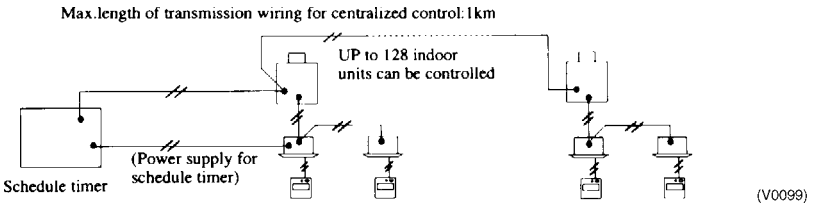	450
	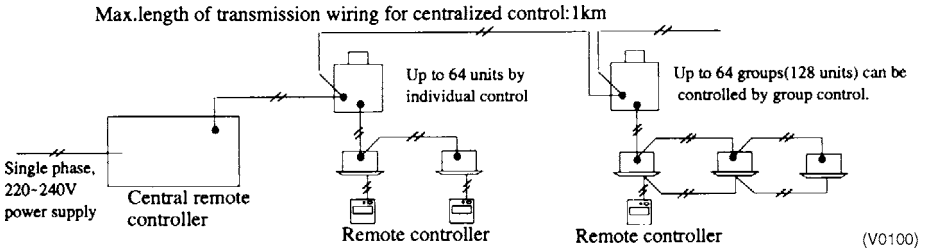	411
	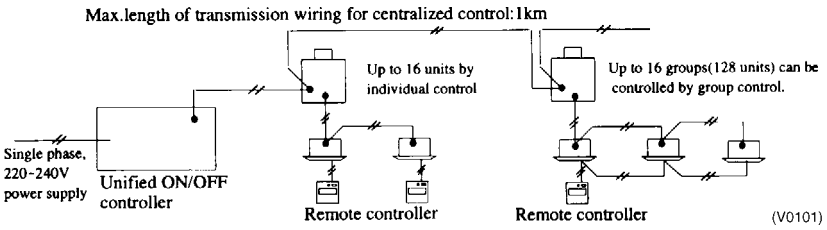	439
	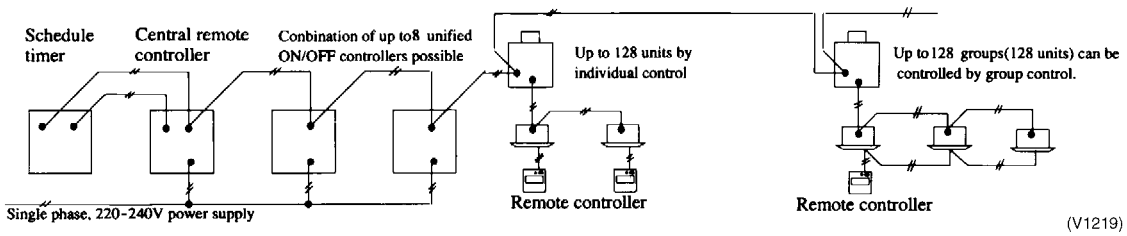	455
	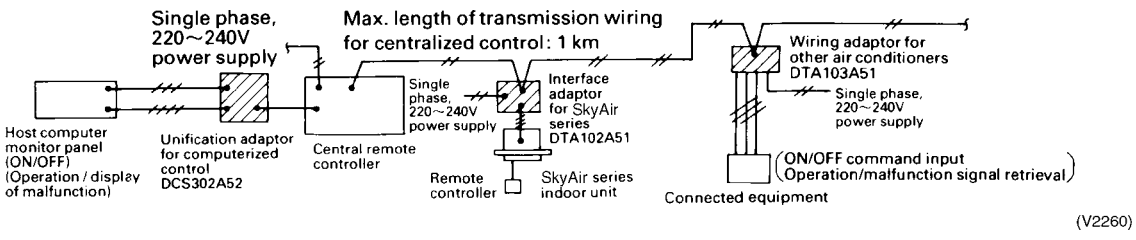	492 509 516

14

Control Method		Objective / Use	Unit Name and Model	Function	Standard Number of Controllers	
Remote Control	Wiring adaptor for electrical appendices (2)	For control by operation command from building control room	■ With remote temperature setting 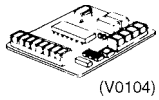 (V0104) **KRP4A51** **KRP4A52** **KRP4A53** **KRP4A54** Built into indoor unit	■ Normally open or momentary open type contactor ■ 12~24 VDC or no-voltage ■ Various control methods available by mode select switch ■ Voltage, no-voltage selector switch ■ Alarm and operation display signal (no-voltage) ■ Selector switch of zone/individual of alarm display ■ Remote temperature setting (resistance input of 0~135Ω) ■ Selector switch for remote controller temperature setting enable/inhibit * For group unified control, the setting becomes the same for all connected indoor units, and each indoor unit is controlled individually by built-in thermostat. * In case of using wiring adaptor for Electrical Appendices (2), the control by 2 remote controller is not available.	1 PC board controls 1 indoor unit. 1 PC board simultaneously controls 1 group of indoor units (max. 16 units).	
	Wiring adaptor for electrical appendices (1)		■ With remote temperature setting 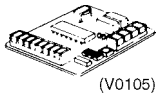 (V0105) **KRP2A53** **KRP2A61** **KRP2A62** Built into indoor unit		1 PC board simultaneously controls 64 groups (total of 128 units).	
Wiring Modification	Adaptor for wiring	When controlling operation with optional accessories added inside indoor units, the status is displayed outside.	 (V0106) Built into indoor unit **KRP1B56, 57, 59, 61** **KRP1B3**	■ Required when electric heater optional accessory has been added. ■ Operation display signal and compressor operation signal are supplied.	1 adaptor controls the electric heater.	
Building Control System		Building control computer, air-conditioning control computer and control system for air-conditioning are carried out by communication and contact signal.	■ Interface for use in BACnet® **DMS502A51** ■ Optional DIII board **DAM411A1** ■ Optional Di Board **DAM412A1** ■ Parallel interface **DPF201A51, 52, 53** ■ Interface for use in LON WORKS® **DMS504B51**	■ Interface for use in BACnet® Interface unit to allow communications between VRV and BMS. ■ Parallel interface Carries out operation and monitoring function of each indoor unit by contact and analog signal. ■ Interface for use in LON WORKS® The LON Gateway functions as the interface for a building monitoring system and cannot be w-installed on the DIII-NET along with following equipment / devices that have similar functions.	Interface for use in BACnet®: Up to 256 indoor units (256groups) When the option DIII board is used Parallel Interface, Interface for use in LON WORKS® Up to 64 indoor units (64 groups)	
Scheduled Control	Wired remote controller with weekly schedule timer	Desired Weekly Scheduled Operation of ON/OFF and Temperature's Set-back	**BRC1D61** 	■ 24-hour clock function (1-hour backup for power failures) ■ Programming function for each day of week. ■ Scheduling possible of start/stop and temperature limit (5 settings/day) ■ Programming can be enabled or disabled. ■ Copy function for programmed schedules.	One indoor unit control by one wired remote controller with weekly schedule timer Max. 16 groups under simultaneous control by one wired remote controller with weekly schedule timer	

	Outline of System		Relevant Page Number
	■ Individual Control (Controls Indoor Units Individually.) ● Individual control (Controls indoor units individually.) 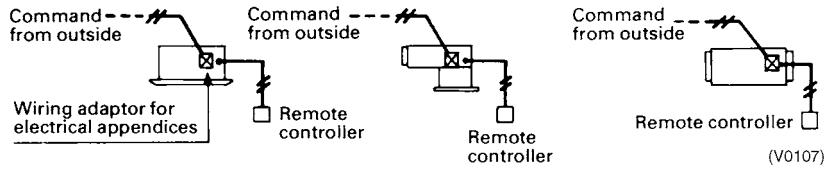	■ KRP1B61,2,3 KRP2A61,62 and KRP4A51,52,53 can be built-in together into the indoor units 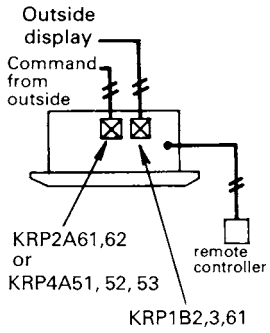	503
	■ Group Unified Control (Controls group controlled indoor units all at once and simultaneously.) ● Group unified control (Controls group controlled indoor units all at once and simultaneously.) 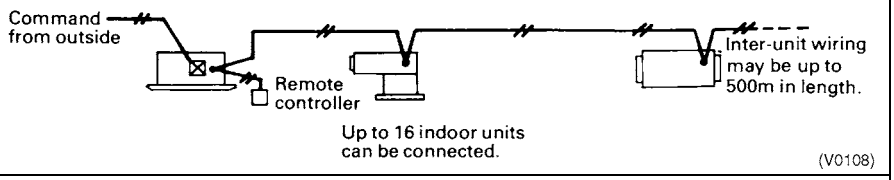		
	■ Zone Unified Control (Unified, simultaneous control of up to 64 groups of group controlled indoor units consisting of up to 16 units each.) ● Zone unified control (Unified, simultaneous control of up to 64 groups of group controlled indoor units consisting of up to 16 units each.) 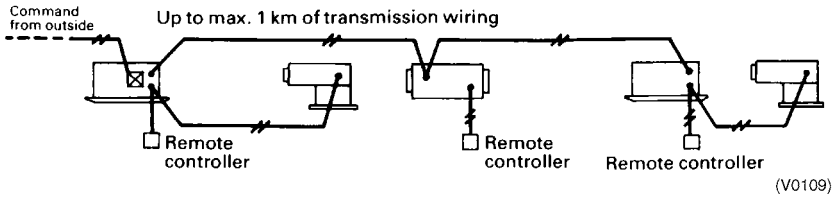	Combined use of wiring adaptor for Electrical Appendices (1) and (2) is not available.	496
	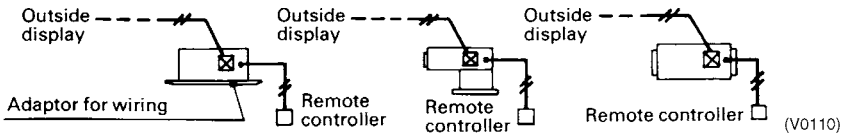		528 530
	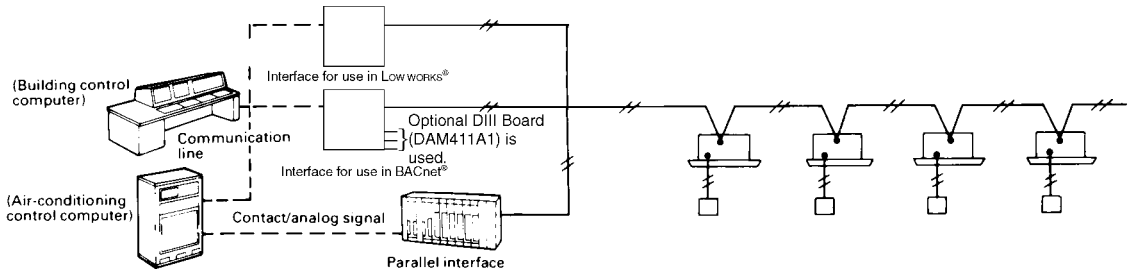		388 393
	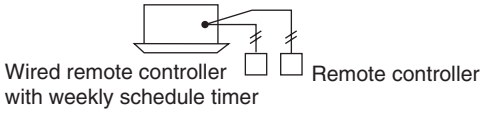		472
	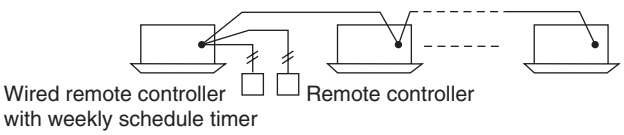	* Be sure to provide a master remote controller. This scheduled operation cannot be used in both cases at control by two remote controllers and at the connection of a group remote control adaptor.	

14

3.2 Building Control System Introduction

High-speed transmission type air-conditioning control system D-BACS (DAIKIN Building Air-conditioning Control System) networks up to 64 groups of indoor units (128 units). There is a complete line up of variegated control equipment for D-BACS, such as parallel interface, or a master station that can directly access a building control computer via a communication line. Changing control function to a component configuration makes D-BACS a central control system that can be flexibly combined with other equipment, which can respond to various air-conditioning control needs such as application, conditions and scale.

3.2.1 Interface for use in BACnet®

This system sets the control configuration and controls air-conditioning equipment, monitors system status and possesses a system backup function.

■ **Control configuration setting function for air-conditioning equipment**

System Outline

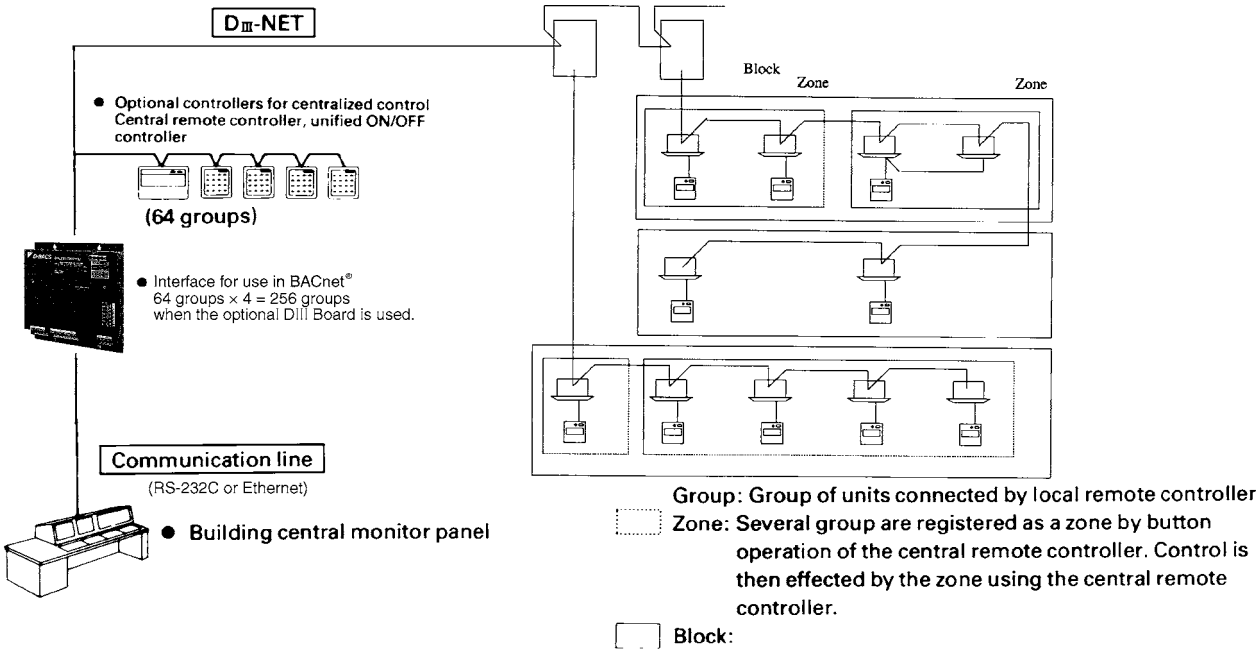

Name	Functions
Interface for use in BACnet® (DMS502A51)	Interface unit to allow communications between VRV and BMS. Operation and monitoring of air-conditioning systems through BACnet® communications.
Optional DIII board (DAM411A1)	Expansion kit, installed on the DMS502A51, to provide 3 more DIII-NET communication ports. Not usable independently.
Optional Di Board (DAM412A1)	Expansion kit, installed on the DMS502A51, to provide 16 more wattmeter pulse input points. Not usable independently.
Central Remote Controller (DCS302CA61)	Functions as a backup if the building control systems fails.
Unified ON / OFF Controller (DCS301BA61)	Central control panel for simple operation by ON/OFF switch and LED display. Also functions as a backup just as with the central remote controller.
Local Remote Controller (BRC1C62)	Provided in each room. Used for operating, setting and monitoring air-conditioning equipment.

Note:

1. A group consists of several indoor units that can be started or stopped simultaneously. As shown in the figure above, a group consists of several indoor units wired to the same remote controller. For units without a remote controller, each unit is treated as a group.
2. Several groups are registered as a zone with the central remote controller. By pushing 1 button of the central remote controller, all groups within the same zone can be turned on or off simultaneously.

Building management 1 system controls and monitors air-conditioning equipment by the block. A block consists of 1 or more groups (max. 16), and can be set without regard for the zones mentioned above. You must, however, take the following things into consideration.

(1) If the air-conditioning mode is switched, as a premise, permission for cool/heat selection for indoor units (by remote controller or central remote controller) must be designated within the program.

(2) Program status is basically monitored by observing the data of a representative unit. The contents which can be monitored are therefore restricted if the representative unit is designated as an adaptor, etc.

Block registration is accomplished through signal transmission from the building control system to the cooler-conditioning system. Because configuration can be changed while receiving power even after operating, maintenance from the maker of the air-conditioning equipment is not required when changing the configuration.

3.2.2 Wiring Diagram

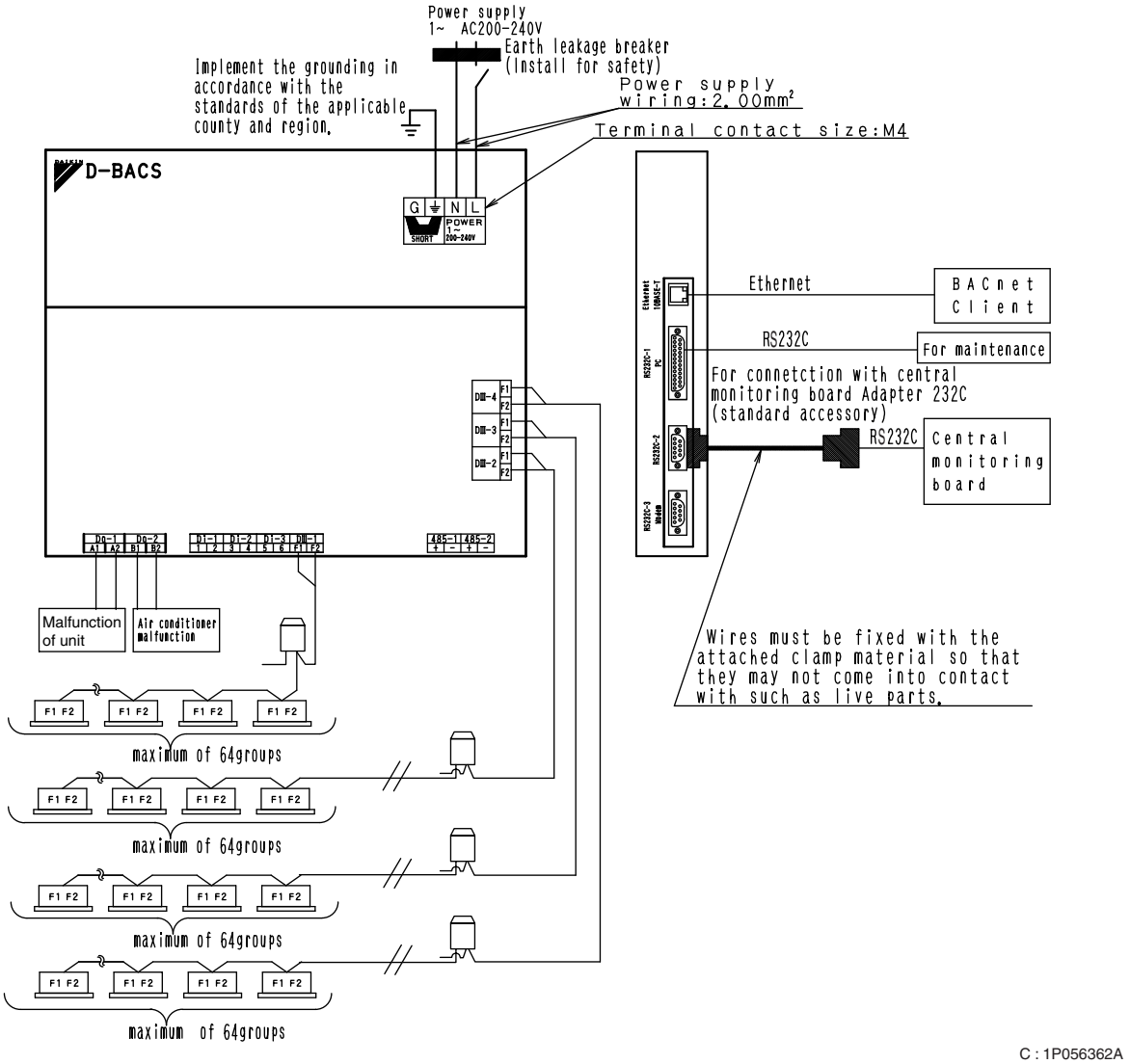

C : 1P056362A

14

3.2.3 Air-Conditioning Equipment and Possible Functions

Function	Air-conditioner devices			Remarks
	VRV Inverter Series	Interface Adaptor for SkyAir Series (SA Heat Pump)	Wiring Adaptor for Other Air-Conditioners	
Start/Stop Control and Monitoring	○	○	○	
Air-Conditioner Error Notification	○	○	○	
Indoor Air Temperature Monitoring	○	○	×	
Temperature Setting and Monitoring	○	○	×	
Air-Conditioning Mode Setting and Monitoring	○	○	×	Air-conditioning mode switching is effective only for indoor units for which cool/heat selection is permitted.
∗1 Remote Controller Mode Setting and Monitoring	○	○	×	
Filter Sign Monitoring and Reset	○	○	×	
Cumulative Power Value Monitoring	○	×	○	
Thermostat Status Monitoring	○	○	×	
Compressor Operation Status Monitoring	○	○	×	
Indoor Fan Operation Status Monitoring	○	○	×	
Heater Operation Status Monitoring	○	○	×	
Air Direction Setting and Monitoring	○	○	×	
Air Flow Rate Setting and Monitoring	○	○	×	
Ventilation Mode Selection	×	×	×	
Ventilation Air Flow Selection	×	×	×	
Forced Thermostat Off Setting and Monitoring	○ ∗2	○	×	
Forced Thermostat On Setting and Monitoring	○ ∗2	○ ∗2	×	
Energy Efficiency Command (Setting Temperature Shift)	○	×	×	

Note:

∗1. Remote controller mode is for acceptance or rejection of on/off operation, temperature setting and air-conditioning mode setting by remote controller.

∗2. If set locally, the host is not notified. Thus, monitoring cannot be accomplished from the host.

3. The meaning of ○, × are as follows

○ : Possible Functions

× : Impossible Functions

3.2.4 Central Control Equipment Combinations

The table below shows which combinations of central control equipment are possible and which are not.

	Central Remote Controller	Unified ON / OFF Controller	Schedule Timer	Wiring Adaptor for Electrical Appendices	Parallel Interface	Interface for use in BACnet®	intelligent Manager
Central Remote Controller	— ∗4	○	○	×	○	○	○
Unified ON/OFF Controller	○	— ∗3	○	×	○	○	○
Schedule Timer ∗1	○	○	—	×	×	×	×
Wiring Adaptor for Electrical Appendices	×	×	×	—	×	×	×
Parallel Interface	○	○	×	×	— ∗2	×	×
Interface for use in BACnet®	○	○	×	×	×	—	×
intelligent Manager	○	○	×	×	×	×	—

∗1 The schedule timer cannot be used by itself. Use in combination with the central remote controller or unified ON / OFF controller.

∗2 May be used in combination if control range differs (up to 4 units).

∗3 May be used in combination if control range differs
(up to 8 units: Up to 16 units in the double central control mode).

∗4 May be used in combination if control range differs
(up to 2 units: Up to 4 units in the double central control mode).

5 The meaning of ○, ×, — are as follows
○: Possible Functions
×: Impossible Functions
—: No Functions

- If using in combination with central control equipment, the relation between them is last command priority.
- If using in combination with central control equipment, the remote control mode is decided by the setting of the highest priority item in the priority rank shown in the table below.

Priority Ranking of Remote Control Mode Settings

	Interface for use in BACnet®	Parallel Interface	Central Remote Controller	intelligent Touch Controller	Unified ON/OFF Controller	Schedule Timer
Priority Ranking	1	1	2	2	3	4

14

3.2.5 Intelligent Touch Controller and Central Control Equipments Combinations

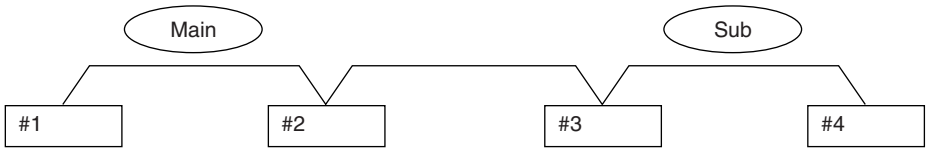

Combination	#1		#2		#3		#4	
	1-00~4-15	Main/ Sub	5-00~5-15	Main/ Sub	1-00~4-15	Main/ Sub	5-00~5-15	Main/ Sub
Impossible	intelligent Touch Controller	Main	intelligent Touch Controller	Main	intelligent Touch Controller	Sub	intelligent Touch Controller	Sub
Impossible	intelligent Touch Controller	Main	intelligent Touch Controller	Main	intelligent Touch Controller	Sub	Central Remote Controller	Sub
Impossible	intelligent Touch Controller	Main	intelligent Touch Controller	Main	Central Remote Controller	Sub	intelligent Touch Controller	Sub
Impossible	intelligent Touch Controller	Main	intelligent Touch Controller	Main	Central Remote Controller	Sub	Central Remote Controller	Sub
Impossible	intelligent Touch Controller	Main	Central Remote Controller	Main	intelligent Touch Controller	Sub	intelligent Touch Controller	Sub
Impossible	intelligent Touch Controller	Main	Central Remote Controller	Main	intelligent Touch Controller	Sub	Central Remote Controller	Sub
Impossible	intelligent Touch Controller	Main	Central Remote Controller	Main	Central Remote Controller	Sub	intelligent Touch Controller	Sub
Impossible	intelligent Touch Controller	Main	Central Remote Controller	Main	Central Remote Controller	Sub	Central Remote Controller	Sub
Impossible	Central Remote Controller	Main	intelligent Touch Controller	Main	intelligent Touch Controller	Sub	intelligent Touch Controller	Sub
Impossible	Central Remote Controller	Main	intelligent Touch Controller	Main	intelligent Touch Controller	Sub	Central Remote Controller	Sub
Impossible	Central Remote Controller	Main	intelligent Touch Controller	Main	Central Remote Controller	Sub	intelligent Touch Controller	Sub
Impossible	Central Remote Controller	Main	intelligent Touch Controller	Main	Central Remote Controller	Sub	Central Remote Controller	Sub
Impossible	Central Remote Controller	Main	Central Remote Controller	Main	intelligent Touch Controller	Sub	intelligent Touch Controller	Sub
Impossible	Central Remote Controller	Main	Central Remote Controller	Main	intelligent Touch Controller	Sub	Central Remote Controller	Sub
Impossible	Central Remote Controller	Main	Central Remote Controller	Main	Central Remote Controller	Sub	intelligent Touch Controller	Sub
Possible	Central Remote Controller	Main	Central Remote Controller	Main	Central Remote Controller	Sub	Central Remote Controller	Sub
Possible	Central Remote Controller	Main	—	—	Central Remote Controller	Sub	—	—
Possible	intelligent Touch Controller	Main	—	—	intelligent Touch Controller	Sub	—	—
Possible	Central Remote Controller	Main	—	—	intelligent Touch Controller	Sub	—	—
Possible	intelligent Touch Controller	Main	—	—	Central Remote Controller	Sub	—	—
Possible	Central Remote Controller	Main	—	—	—	—	—	—
Possible	intelligent Touch Controller	Main	—	—	—	—	—	—

3.2.6 Parallel Interface

You can easily connect host systems such as a building management system, various control systems, tenant management system, etc. to VRV system.

System Outline

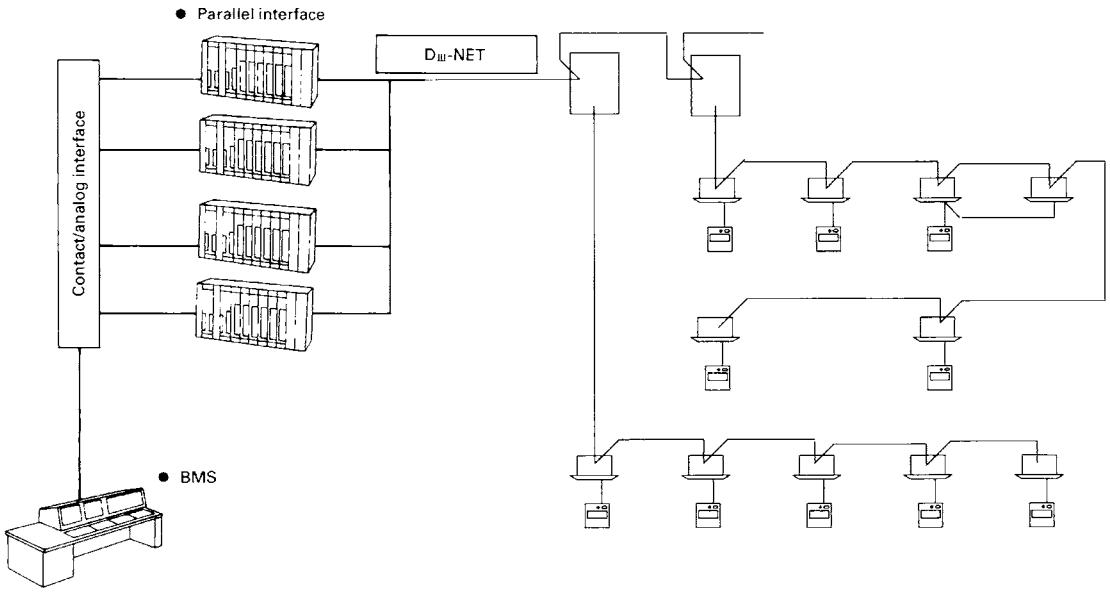

Parallel Interface Outline

- On/off command, status monitoring (contact signal) and room temperature setting, indoor unit suction temperature measurement (analog signal), filter sign monitoring and Unified operation (off) can be carried out by host system.
- You can designate whether operation by local remote controller will be accepted or rejected for each parallel interface.
  (You may select from among central priority, last command priority and remote controller operation rejection.)
- On/off command, status monitoring and room temperature setting can be set for 16 groups individually.
- Suction temperature measurement only is selected for any 4 of 16 groups.
- Units can be increased by units of 16 groups each within the same central control system, and 64 groups can be controlled when a maximum of 4 units are connected.

Connection Functions with Host System

The functions when connected with a host system via parallel interface are given below.

- Functions

Function	Host System	Data Direction	Parallel Interface Processing
Operation/ Setting	On/Off Operation	→	On/off command is detected and sent to applicable group of indoor units.
	Forced Off Operation	→	Off command is detected and all indoor units on the same line are turned off.
	Temperature Setting Control	→	Alteration of the temperature setting is detected, and if within the range of 1.6 to 3.2V, the command is sent to applicable group of indoor units. Setting by local remote controller or central remote controller is impossible when in this range only. (“Central Control” is displayed on the local remote controller.)
Monitoring	On/Off Status (Note 1)	←	Present status is output when change in group status is detected.
	Normal/Error Status (Note 1)	←	Present status is output when change in group status is detected.
	Filter Sign	←	Present status is output when at least 1 group among the control target groups is lit.
	Indoor Unit Suction Temperature	←	Measurement value of suction air temperature is constantly output. If there is a sub unit, the measurement value for the main unit is output.

Note:

1. The various output conditions are as follows.

On: At least 1 air-conditioner in the group is operating.
Off: All air-conditioners in the group are turned off.

Error: An error has occurred for at least 1 air-conditioner in the group.
Normal: All air-conditioners in the group are operating normally.

3.3 Specifications of the Control Wiring

Be sure to use either 2-core sheathed vinyl cord or cable as mentioned below.
(Example : In case of Japanese JIS)

■ Vinyl cab tire round cord	VCTF	JISC3306
■ Vinyl insulated, vinyl sheathed cable for control	CVV	JISC3401
■ Round vinyl sheathed cable for control	CVS	JISC3401
■ Round vinyl insulated, vinyl sheathed cable	VVR	JISC3342
■ 600V vinyl cab tire cable	VCT	JISC3312
■ Polyethylene insulated vinyl sheathed cable	CPEV(∗)	
■ Mesh insulated cable	MVVS(∗)	

<Example>Section of cord

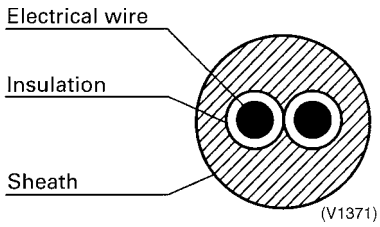

∗ When the shield wire is used, be sure to ground the one side of the shield wire.

∗ Do not use the shield wire with other type of wire in the same system.

<Cautions>

1. **Never use a 3 or more core of cord or cable.**
2. **The size of wire should be 0.75~1.25mm².**
3. **Never bundle the cable or cord of transmission line.**
4. **Be sure to keep the transmission wiring distant from power wiring as shown below to prevent electrical noise.**

Capacity of power wiring		Distance between Power wiring and control wiring	
		Daikin air-conditioner (∗1)	Other air-conditioners
220V or less	10A or less	50mm or more (∗2)	300mm or more
	50A or less		500mm or more
	100A or less		1000mm or more
	100A or more		1500mm or more

Note:

1. ∗1 .....VRV system, SkyAir series and other air-conditioner.
2. ∗2 .....VRV system or other Daikin air-conditioner produces less electrical noise, so that the distance of 50mm or more is sufficient.
3. For control wiring, never use the shield wire together with other sheathed vinyl cord in the same system, which may cause the malfunction in transmission.

[Example]

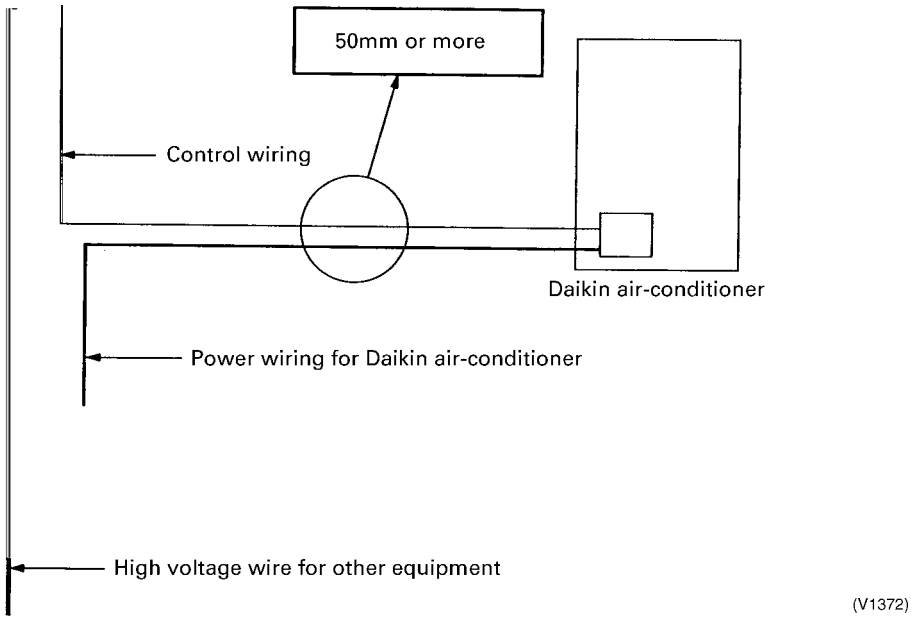

3.4 Wiring Example

Example of Control Wiring

- Be sure to connect the wiring of the central controller to A.
- Be sure to limit the number of indoor units within the limitation for each system.
- Never connect the wire between the controllers, which are connected to the different circuit. (Be careful)
- In order to prevent the connection of three wires on the same terminal, connect to the terminal unit of A, or use the relay terminal (local supply).

<Pattern 1> A : refer to the next page.

<Pattern 2> A : refer to the next page.

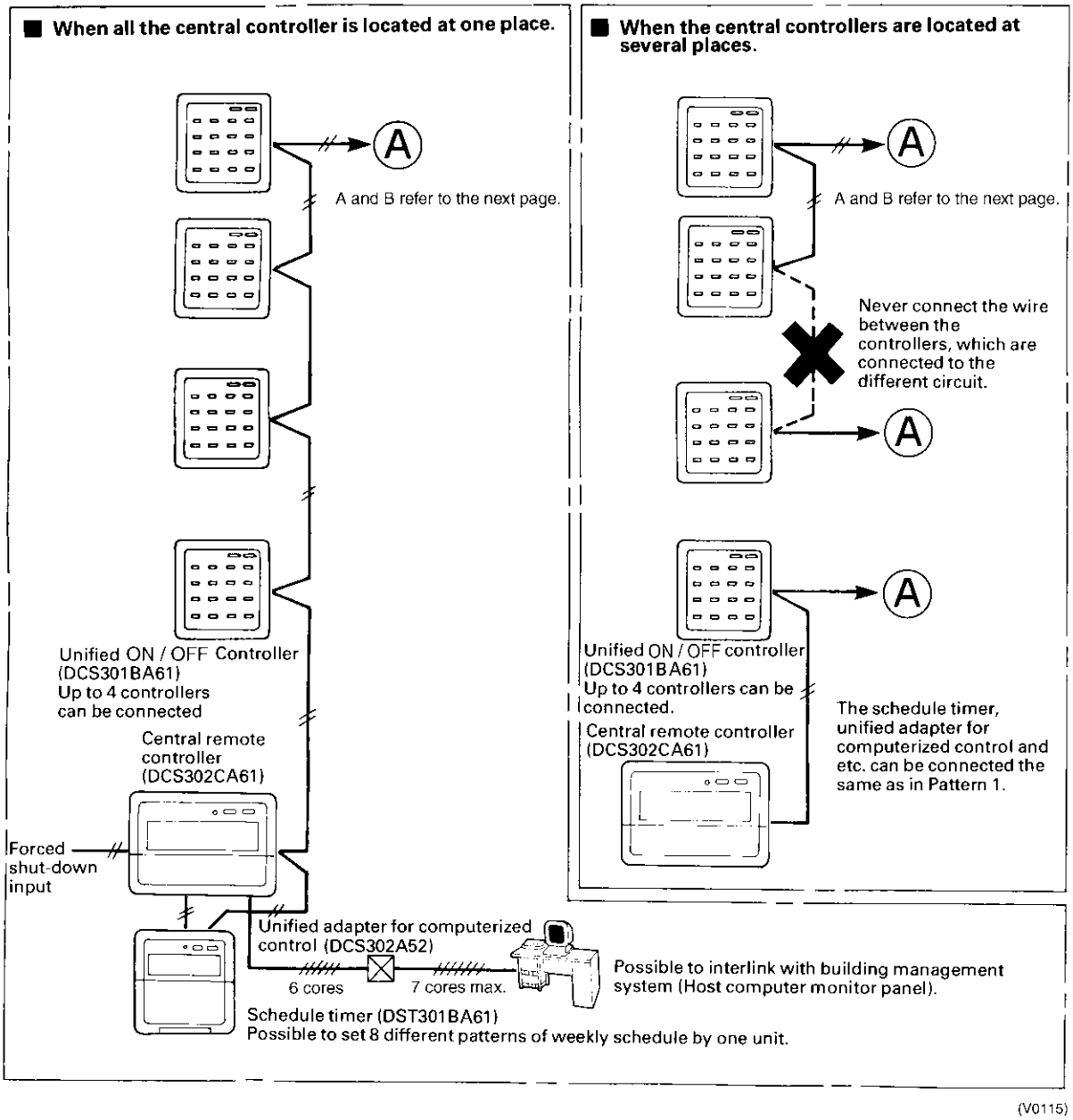

(V0115)

14

- The longest extension of the wiring should not exceed 1000m.
  (Total length of the wiring should not exceed 2000m, excluding the wiring to the remote controller.)
- Up to 128 indoor units can be controlled.
- The total wiring length is 1500m when shielded wire use.

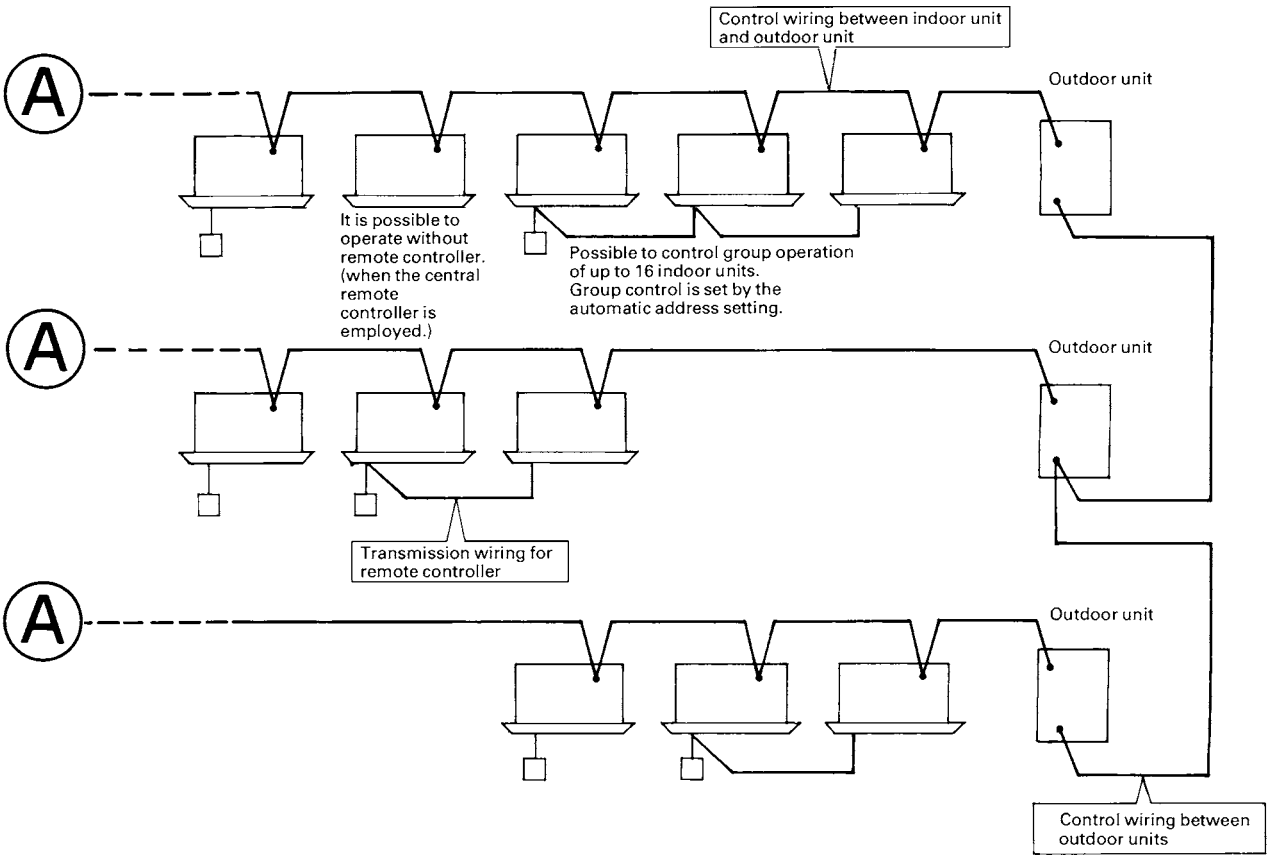

3.5 Length of Transmission Wiring

The super wiring system, which integrates the control wiring between indoor unit and outdoor unit and the transmission wiring to the central controllers into one common wiring, should satisfy the following limitation.
The longest extension of wiring: Not exceeding 1000m
Total length of wiring: Not exceeding 2000m

3.5.1 Example of Wiring

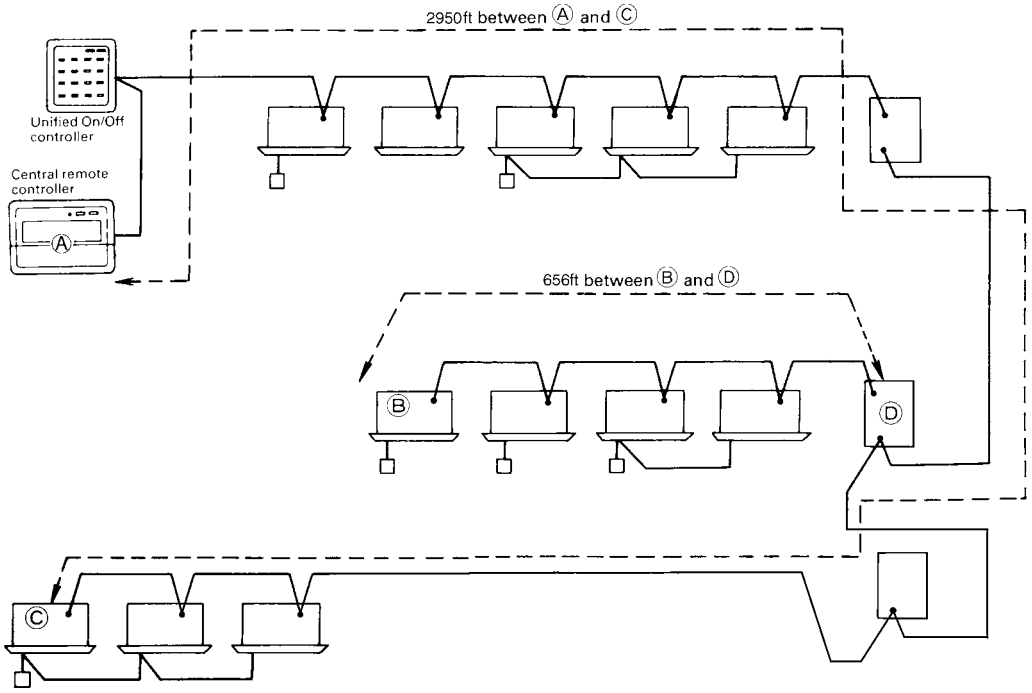

- In the above system, the longest extension of wiring is 900m between (A) and (C), which satisfies the limit of 1000m. And the total length is 1100m, that is the total of 900m between (A) and (C) and 200m between (B) and (C), which also satisfies the limit of 2000m. The central controller functions properly, only when both the longest extension and the total length of wiring satisfies the limitation, as shown above.

Caution

When designing the system, be sure to check both the longest extension and the total length of wiring. If it exceeds the limitation, there is no other way but to split into several systems.

14

3.6 Branch Wiring

Wiring Methods (You can select from the following 3 types of wiring.)

3.6.1 Series Method

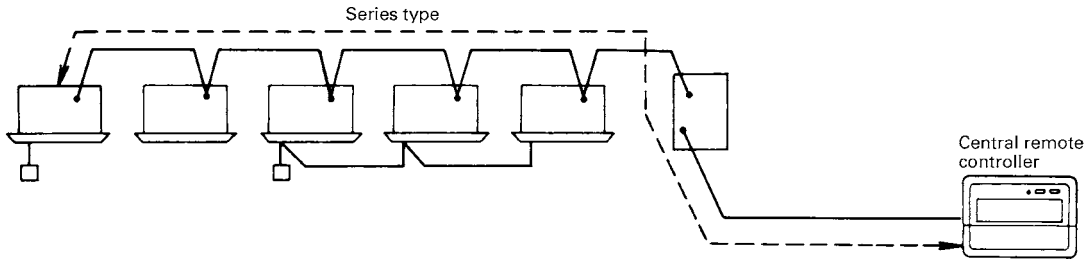

3.6.2 Bus Method (Up to 16 branches is possible. Never diverge the sub-branch from the branch line.)

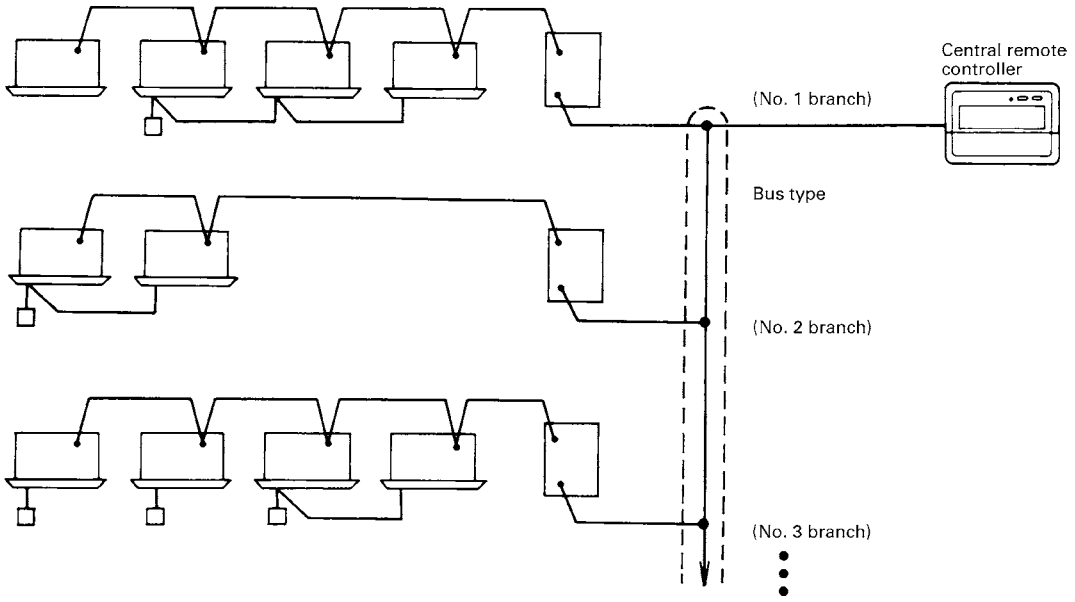

3.6.3 Star Method (Up to 16 branches is possible. Never diverge the sub-branch from the branch line.)

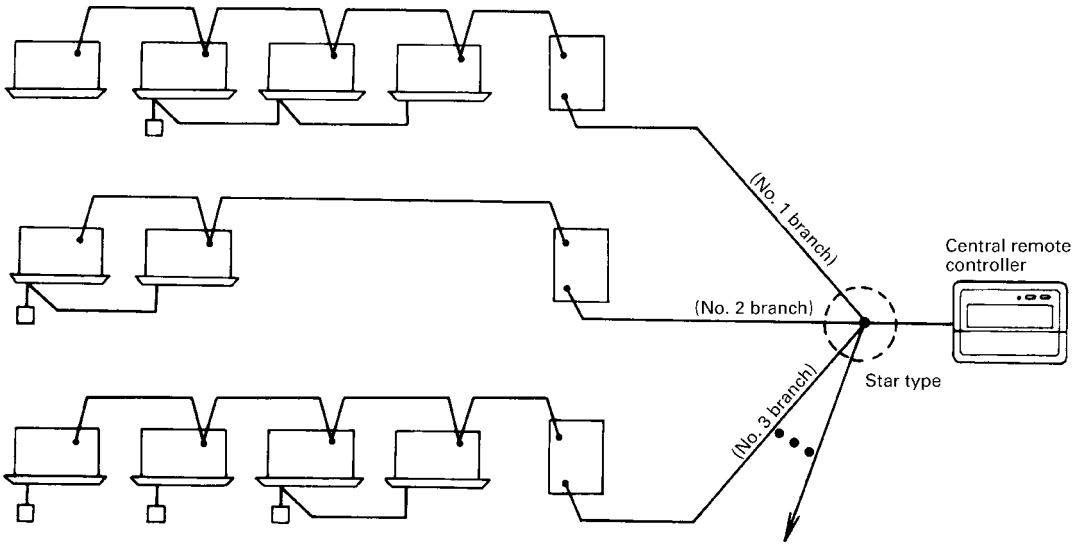

Note:
Though a previous figure shows a case in use of a central remote controller, the wiring form which even other central remote controllers are the same as can be done.

3.6.4 Example of the System (1)

■ Here we define as branch line, which is diverged from the main line and also define as sub-branch line, which is diverged from the branch line.

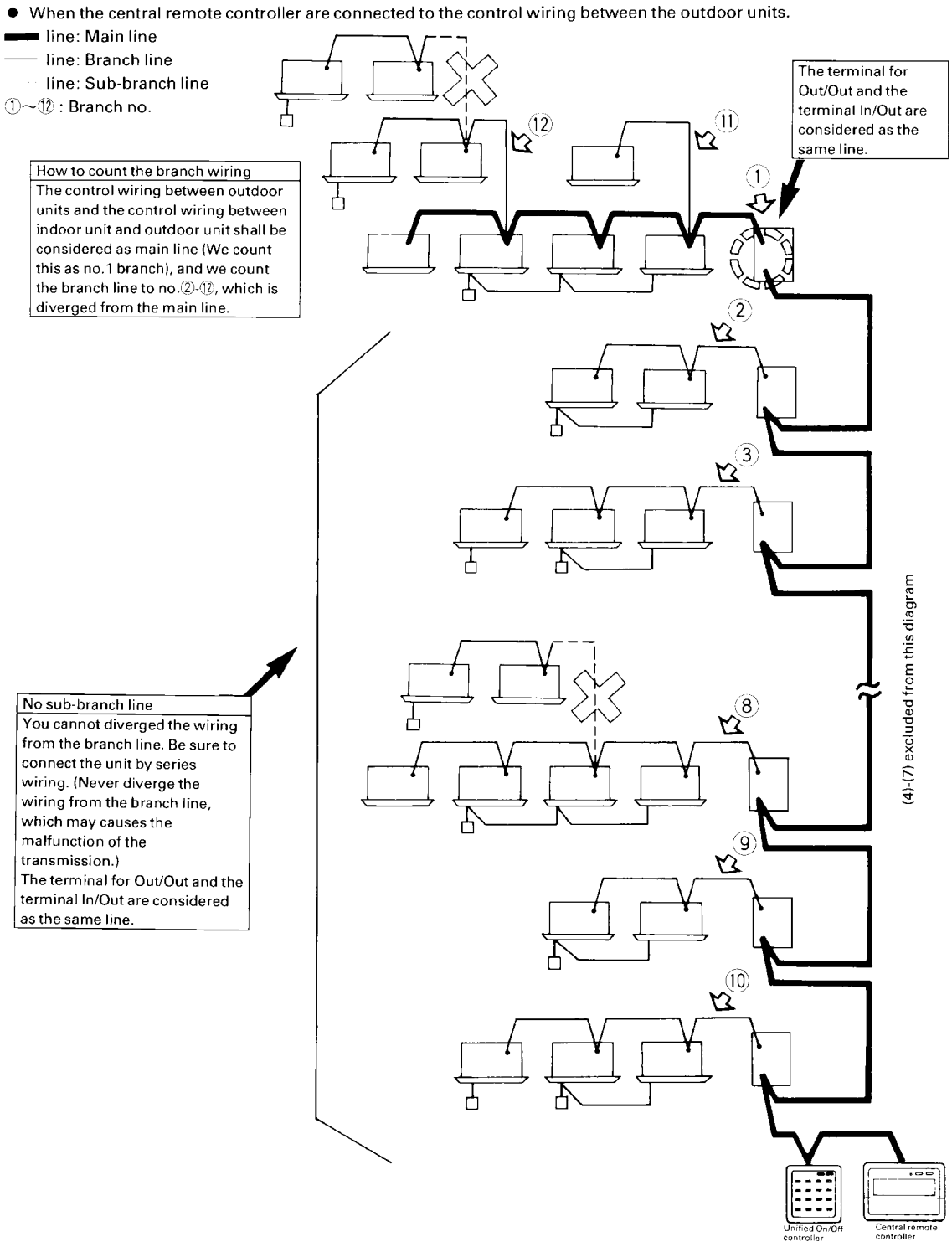

Caution

As shown above, the central remote controllers should be connected to the wiring between the outdoor units, wherever possible. (If connected to the control wiring between indoor unit and the outdoor unit, it may not be able to control the units even on the normal circuit if the circuit connected to the central controller is out of order.)

3.6.5 Example of the System (2)

■ Here we define as branch line, which is diverged from the main line and also call it sub-branch line, which is diverged from the branch line.

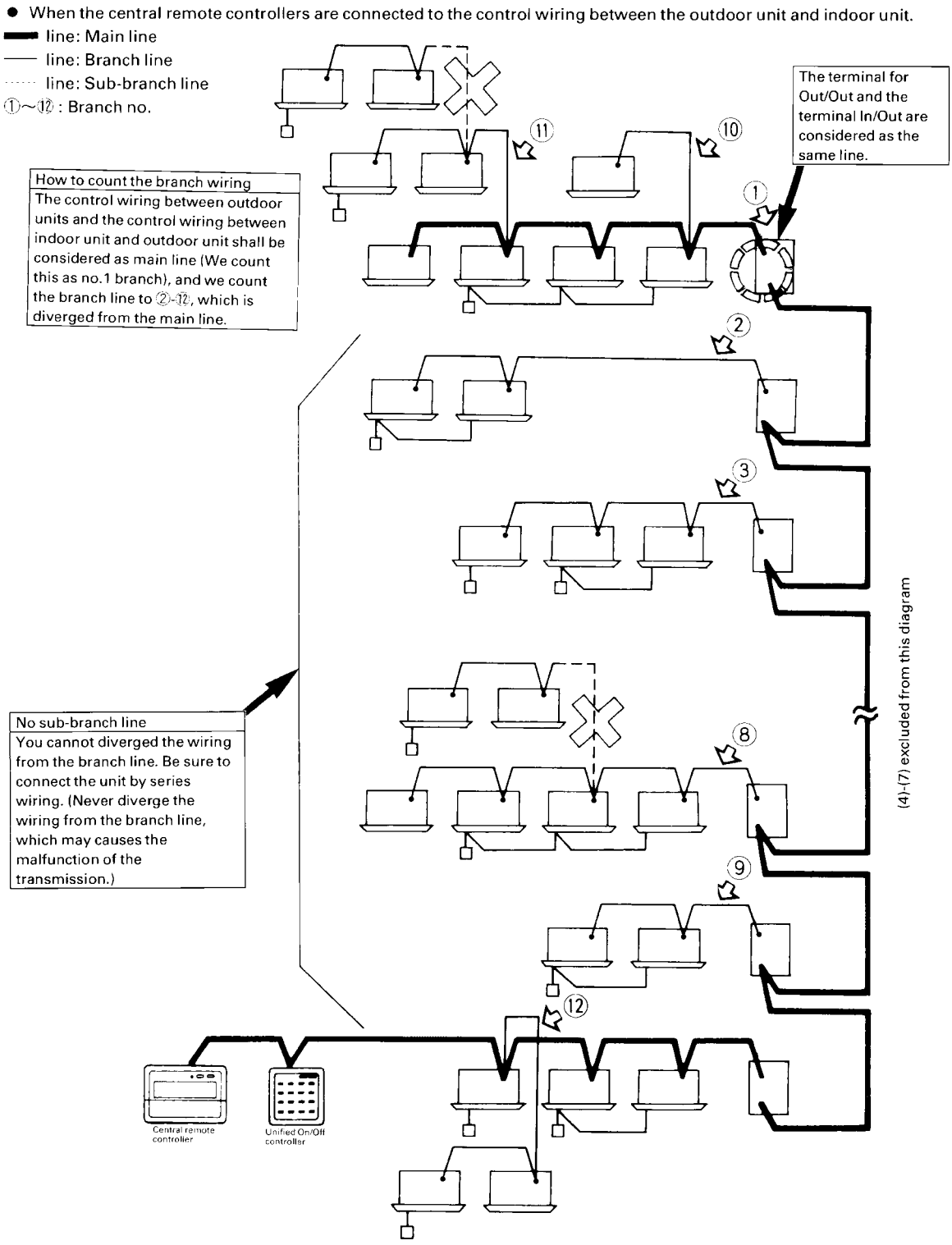

Caution

As shown above, if the central remote controllers are connected to the control wiring between indoor unit and outdoor unit, it may not be able to control the units even on the normal circuit, if the circuit connected to the central controller is out of order. Be sure to connect the central controllers to the control wiring between the outdoor units.

3.6.6 Number of Connectable Units

	Central Control Equipment	Indoor Unit	Outdoor Unit	Other Adaptors
Target Controller (Max. Number)	■ Central remote controller (2 units) (Note 1) ■ intelligent Touch Controller (2 units) (Note 1) ■ Unified ON/OFF controller (8 units) (Note 1) ■ Schedule timer (1 unit) ■ Interface for use in BACnet® (1 unit) ■ Parallel interface (4 units) ■ Intelligent Manager II (1 unit) ■ Interface for use in LON WORKS® (1 unit)	■ VRV system ■ SkyAir series (Interface adaptor for SkyAir is required.) ■ Packaged air-conditioner (FD, UAT, etc.) (Wiring adaptor for other air-conditioner is required.) ■ Room air-conditioner (Wiring adaptor for other air-conditioner is required.) ■ BS unit (Note 3) ■ Wiring adaptor	Outdoor unit for VRV system	■ External control adaptor for outdoor unit ■ Wiring adaptor for electrical appendices (1)
Number of Units	(Note 2)	Up to 128 units (Note 5)	Up to 10 units (Note 4)	Up to 10 units

Note:

1. When you have a 2 central control system (to control one system from 2 central locations), 2 intelligent Touch Controllers, 4 central remote controllers and 16 unified ON/OFF controllers can be connected. However, a maximum of 128 units can only be controlled.
2. When you connect 8 or more central control equipment, it is required to satisfy the following conditions. (The following conditions are not required to be considered when the number of controller is 7 or less.)

■ **Central control equipment + Indoor units + Outdoor units + other adaptors ≤ 160 units**

■ **Central Conversion number of central control equipment (∗) + Indoor units + Outdoor units + other adaptors ≤ 200 units**

(Note: (∗) is converted one central control equipment except unified ON/OFF controller as 10 units.)

3. When BS unit is installed, BS unit is not counted in the number. However, the indoor units after BS unit should be counted.
4. The outdoor unit is limited up to a maximum of 10 units and the total rated capacity should be 280kW (100HP) or less, and also the number of function units is also limited up to 5. However, if the sequential start setting is possible, up to 10 function units can be connected.
5. When the parallel interface is connected, the number of indoor units are limited up to 64 groups (128 units). When you judge whether the number of the connectable units is possible, refer to the flow chart on the next page.

3.6.7 Flow Chart to Determined the Number of Units to Connected

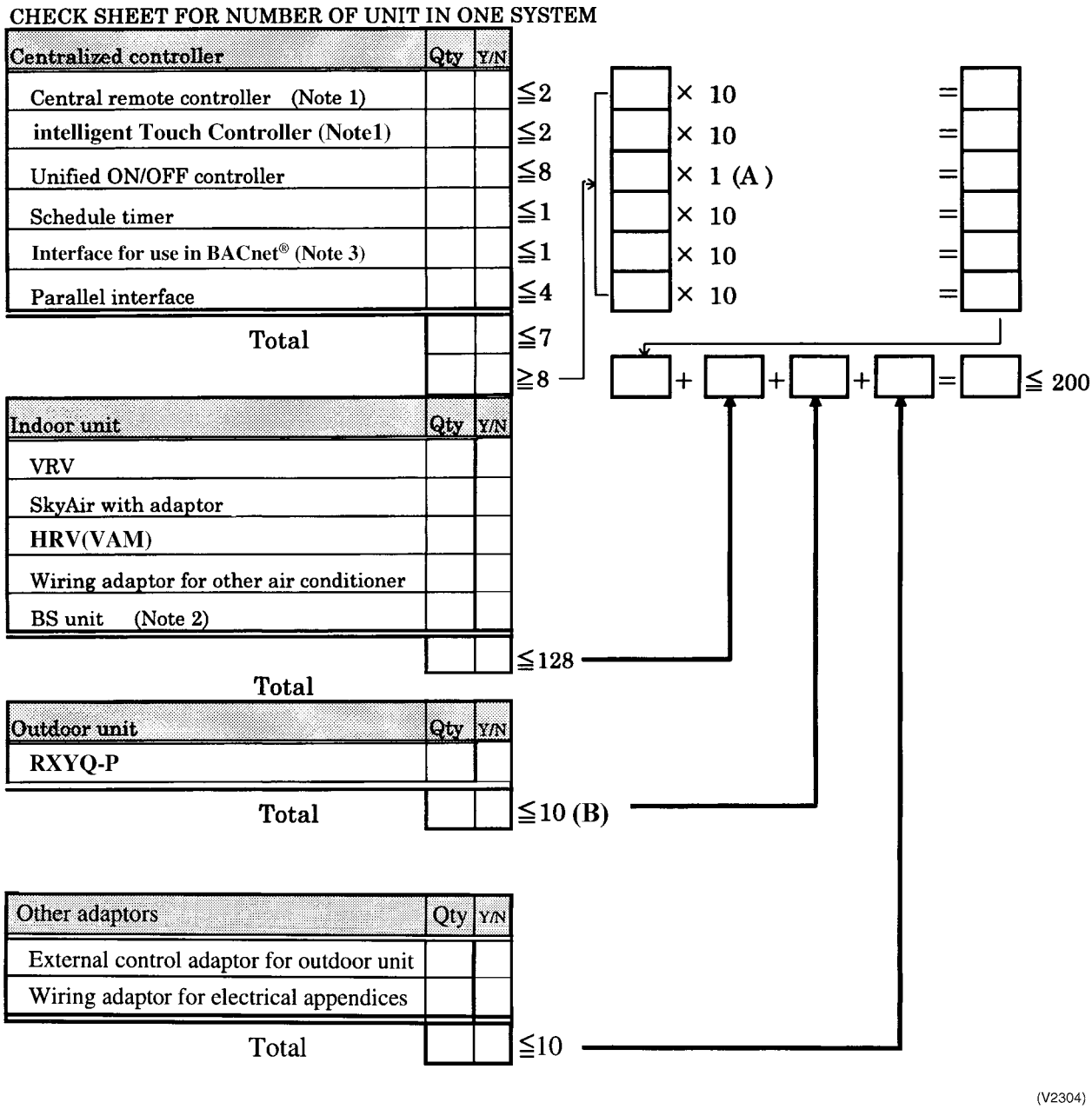

(V2304)

Note:

Condition

(A) means;

- Central control equipment + Indoor units + Outdoor units + other adaptors ≤ 160 units
- Conversion number of central control equipment + Indoor units + Outdoor units + other adaptors ≤ 200 units

(B) means;

In case of connecting to DIII NET

- Outdoor units must be counted to one system even in case of including 3 units. (Master + Master + Master = One system)
- The outdoor units connected by terminal Ex. Q1, Q2 (excepting terminal F_1, F_2) are regarded as one system.

Control wiring		Y/N	
Maximum extension	M		< 1000
Total wiring length	M		≦ 2000
Wiring Branch			≦ 16

(V0121)

Note:

1. When one system is to be controlled from two locations, up to two intelligent Touch Controller (In case of combining the intelligent Touch Controller and Central Remote Controller, it is restricted to combine two Controllers in total), four Central Remote Controller and 16 unified ON/OFF Controller can be connected. However, the maximum number of units that can be controlled is 128.
2. When a BS unit is used, the indoor units used in its downstream are not counted.
3. One port of one Interface for use in BACnet® can have up to 64 groups (64 master indoor units with address). In case of adopting group controlling, the circuit covered by the data station can have up to 128 indoor units including main and sub units.

4. Control Devices

4.1 <BRC1C62> Wired Remote Controller

You can construct a versatile control system that can respond to various applications by taking advantage of the optional accessory liquid crystal remote controller for indoor units.
Remote controller wiring for transmission for a simplified remote controller (BRC2C51 (BRC2A51), BRC3A61) is the same as that of a standard remote controller (BRC1C62). Because the functions of the simplified remote controller are limited, we recommend using in combination with a central remote controller.

4.1.1 Appearance and Functions



- Large liquid crystal screen displays complete operating status.
- Digital display lets you set temperature in 1°C units.
- Lets you individually program by timer the respective times for operation start and stop within a maximum of 72 hours.
- Equipped with a thermostat sensor in the remote controller that makes possible more comfortable room temperature control.
- Monitors room temperature and preset temperature by microcomputer, and can select cool/heat operation mode automatically. (VRV System Heat Recovery Series only)
- Enables you to select cool / heat / fan operation mode with the indoor remote controller of your choice without using the cool / heat selector. (VRV System Inverter series, Heat Recovery series, Plus series)
- Constantly monitors malfunctions in the system for 40 items, and is equipped with a “self-diagnosis function” that lets you know by message immediately when a malfunction occurs.
- Lets you carry out various field settings by remote controller.

Note: For connection unit series

* If indoor units from the Connection unit series are connected within a single refrigerant system to indoor units from any other series, cooling/heating switchover will not be possible using the remote contoroller of the Connection unit series indoor units, However, if the remote controller of an indoor unit from the other series is set as a master remote controller, cooling/heating switchover will be possible.
* If all indoor units are from the Connection unit series, an outdoor unit Cool/Heat selector will be needed to enable cooling/heating switchover.
* In case of Heat Recovery System
  Cooling/Heating changeover is possible when connecting with BS unit.

4.1.2 Example of Control by Remote Controller

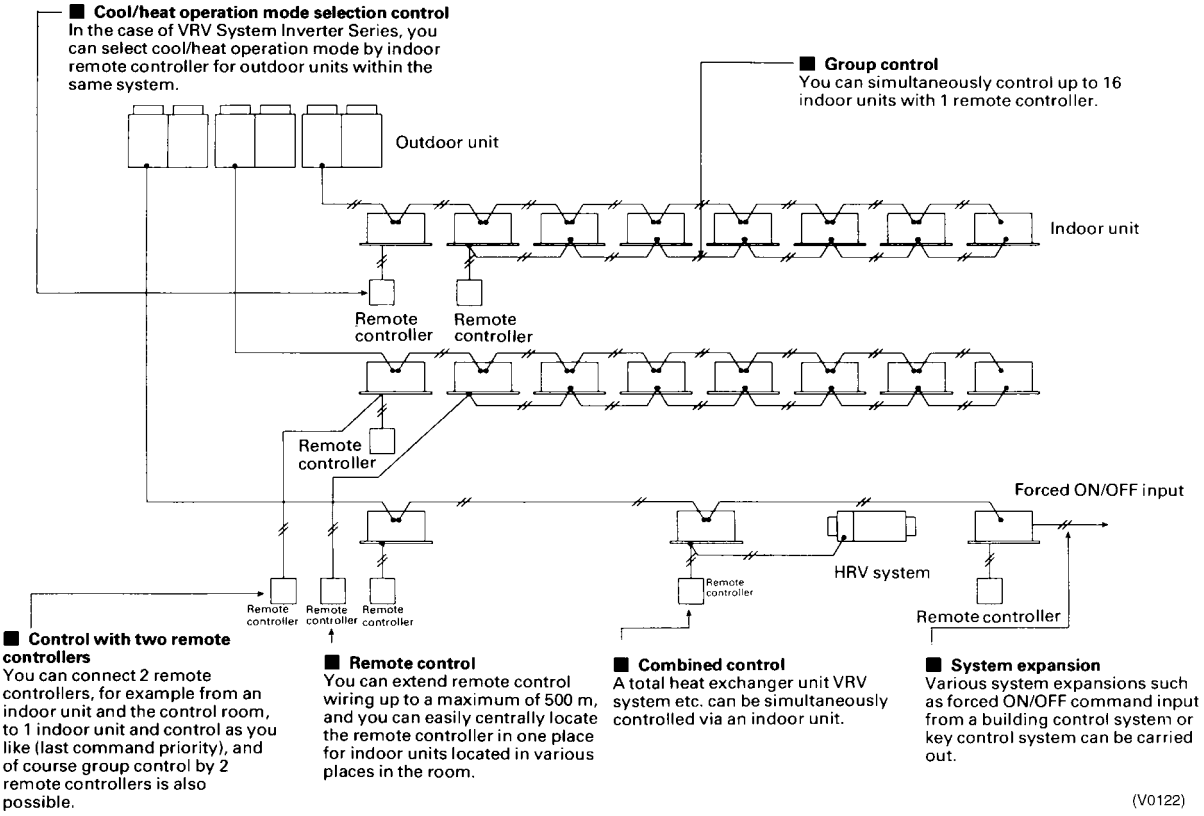

4.1.3 2 Remote Controllers

1 indoor unit is controlled by 2 remote controllers from 2 separate locations

This is a convenient system for when you want to operate an indoor unit in the reception room from the office, for example, or finely operate an indoor unit from a local or remote location. (The same applies to other types of indoor units.)

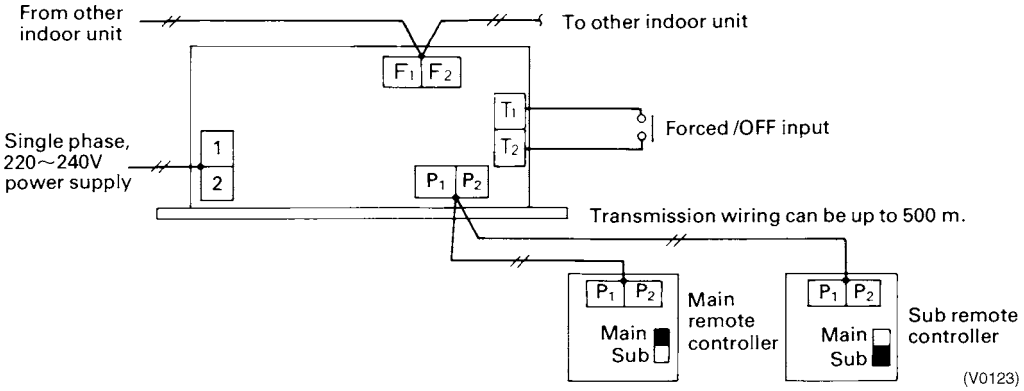

- Operation control mode of the indoor unit is last command priority.
- Remove the front panel of the remote controller and set the main/sub changeover switch on the PC board to “main” for the main remote controller, and to “sub” for the sub remote controller.

Note:

The remote controller is equipped with a thermostat sensor. If the main and sub remote controllers are mounted in separate rooms, set the main remote controller so that the thermostat sensor in the remote controller is not used.

4.1.4 Group Control

Simultaneous control of up to 16 units with a single remote controller

This is a convenient system for when you want to simultaneously control several indoor units with the same settings for air conditioning a wide, single floor.

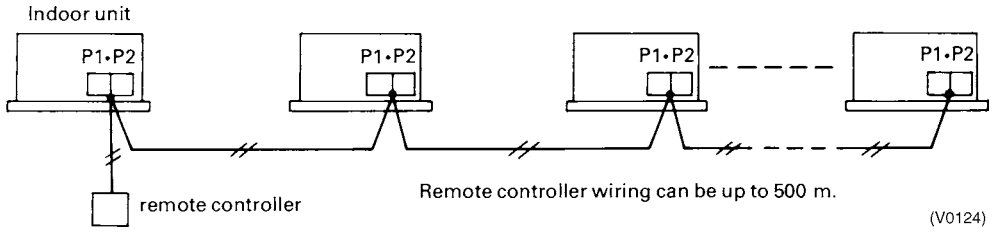

- Wiring for remote controller group control has no polarity, P_1 and P_2 can be switched.
- All indoor units within the group have the same setting, and each indoor unit is controlled individually by its own built-in thermostat.
- Because automatic address is used, address does not have to be set by remote controller for group control.

Note:

- Only remote controller wiring is shown.
- For Connection unit series
  Although group control in Connection unit series is possible, however, group control with other series is impossible.

4.1.5 Remote Control

Enables forced OFF or ON/OFF control of indoor unit by input from outside.

Indoor units can be started or stopped by building control or key control system.

Notes

· FXUQ-M, FXLQ-MH : Optional Accessory (Remote ON/OFF, forced OFF <EKRORO> is required.)

· FXAQ-MH : is not available

14

1. Wiring method and specifications

- Remote control can be carried out by connecting input from outside to terminals T_1 and T_2 of the terminal block (for remote controller transmission wiring).

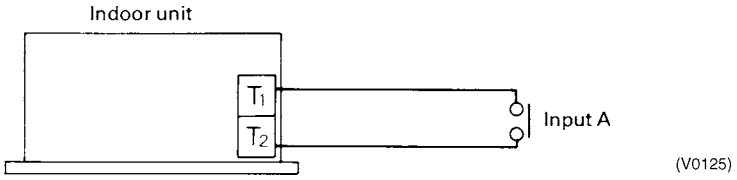

2. Contents of operation

- Operation is as given in the table on the right for input A of forced OFF and ON/OFF control.

3. How to select forced OFF and ON/OFF control

- Select input by remote controller after turning on the power supply.
- Set to the field set mode by remote controller.
- After entering the field set mode, select mode No. 12, set the first code No. to “1,” and set the second code No. to “01” for forced OFF, or to “02” for ON/OFF control.
  (Factory setting is set to forced OFF.)

Wiring specifications	Sheathed vinyl cord or cable (2 wire)
Wiring thickness	0.75~1.25 mm²
Wiring length	Max. 100 m
Outside contact specifications	Contact that guarantees minimum applicable capacity of 15 VDC, 10mA

For forced OFF	For ON/OFF control
Forced OFF (remote controller rejection) by input A “ON”	Operate by switching input A from “OFF” to “ON”
Remote controller acceptance by input A “OFF”	Operate by switching input A from “ON” to “OFF”

4.1.6 Dimensions

BRC1C62

For FXC(Q), FXF(Q), FXK(Q), FXD(Q), FXS(Q), FXM(Q), FXH(Q), FXA(Q), FXL(Q), FXUQ-M

Unit (mm)

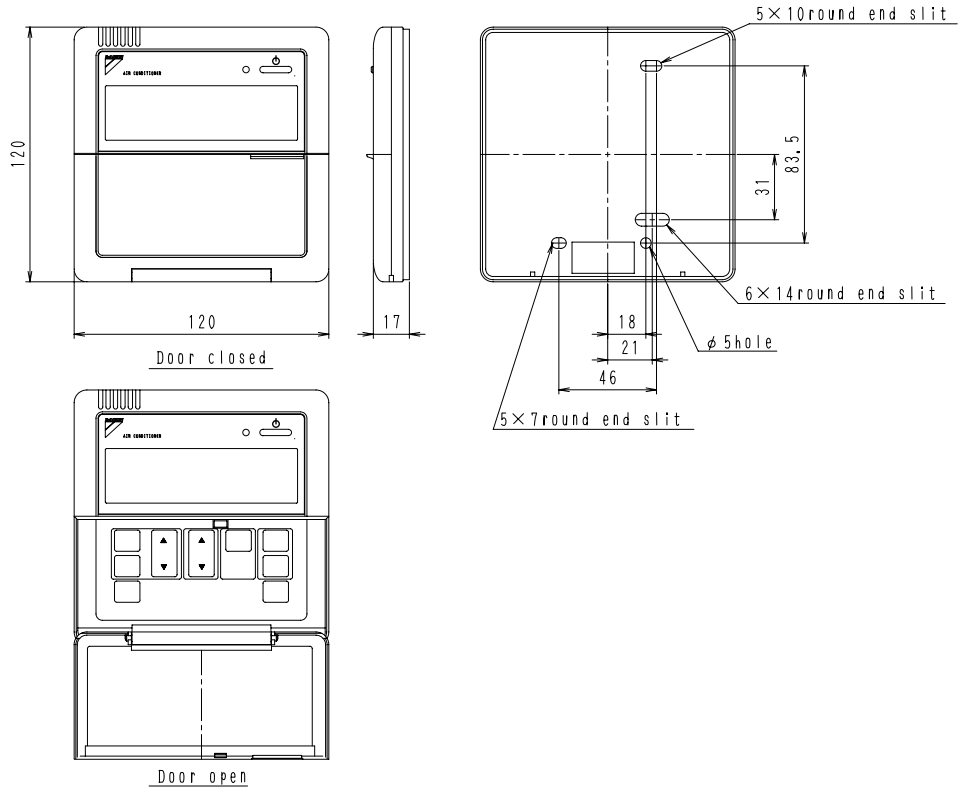

DU820-226

14

4.2 Wireless Remote Controller / Receiver

FXC(Q)

BRC7C62 ... For Heat Pump
BRC7C67 ... For Cooling Only

Unit (mm)

• REMOTE CONTROLLER DIMENSIONS

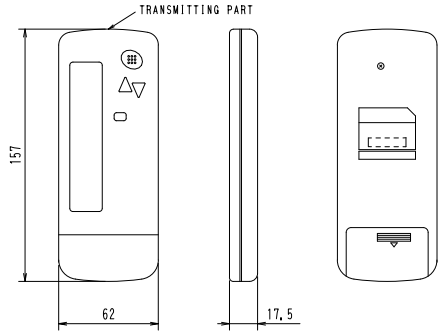

• REMOTE CONTROLLER HOLDER INSTALLATION PROCEDURE
<INSTALLATION TO WALL SURFACE>

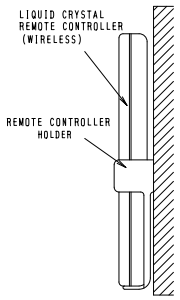

• RECEIVER INSTALLATION PROCEDURE

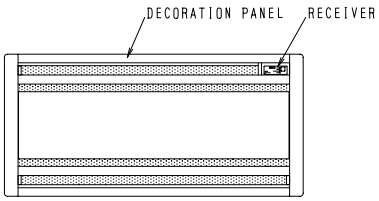

• RECEIVER DETAIL

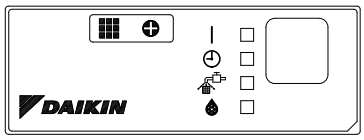

• WIRELESS REMOTE CONTROLLER KIT FOR EACH DECORATION PANEL

WIRELESS REMOTE CONTOROLLER KIT	DECORATON PANEL	
BRC7C62 BRC7C67	BYBC32GJW1	BYBC32G-W1
	BYBC50GJW1	BYBC50G-W1
	BYBC63GJW1	BYBC63G-W1
	BYBC125GJW1	BYBC125G-W1

3D007588A

FXF(Q)

BRC7E61W... For Heat Pump
BRC7E65 ..... For Cooling Only

Unit (mm)

• REMOTE CONTROLLER DIMENSIONS

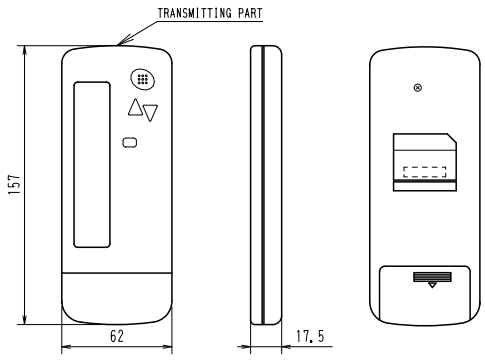

• REMOTE CONTROLLER HOLDER INSTALLATION PROCEDURE
< INSTALLATION TO WALL SURFACE >

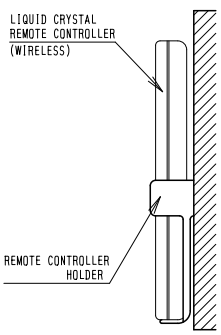

• RECEIVER INSTALLATION PROCEDURE

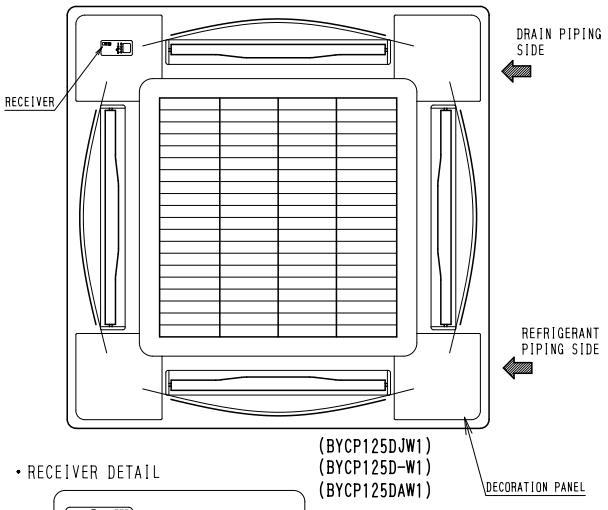

• RECEIVER DETAIL

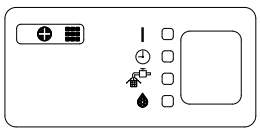

• WIRELESS REMOTE CONTROLLER KIT FOR EACH DECORATION PANEL

WIRELESS REMOTE CONTROLLER KIT	DECORATION PANEL
BRC7E51W BRC7EA51W	BYCP125DJW1 BYCP125DAW1
BRC7E61W	BYCP125D-W1
BRC7E65	

3D034088A

FXD(Q), FXS(Q), FXM(Q), FXL(Q), FXN(Q)

BRC4C62 ... For Heat Pump

BRC4C64 ... For Cooling Only

• REMOTE CONTROLLER DIMENSIONS

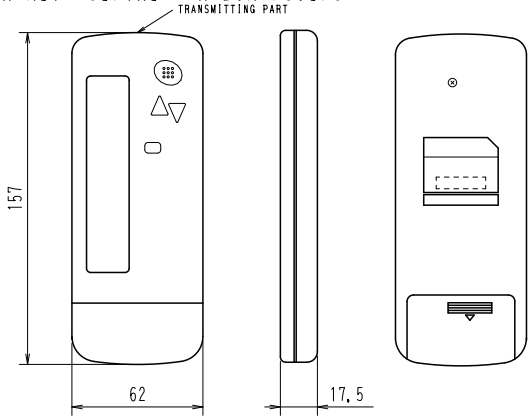

• REMOTE CONTROLLER HOLDER INSTALLATION PROCEDURE
<INSTALLATION TO WALL SURFACE>

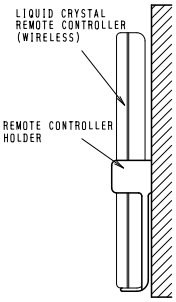

• Service space for ceiling installation

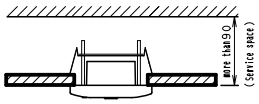

NOTE Do not install more than 3 receivers in the vicinity of one another.
With 4 or more units, there is always the possibility of malfunction.

FXK(Q)

BRC4C61 ... For Heat Pump

BRC4C63 ... For Cooling Only

• RECEIVER DETAIL

Unit (mm)

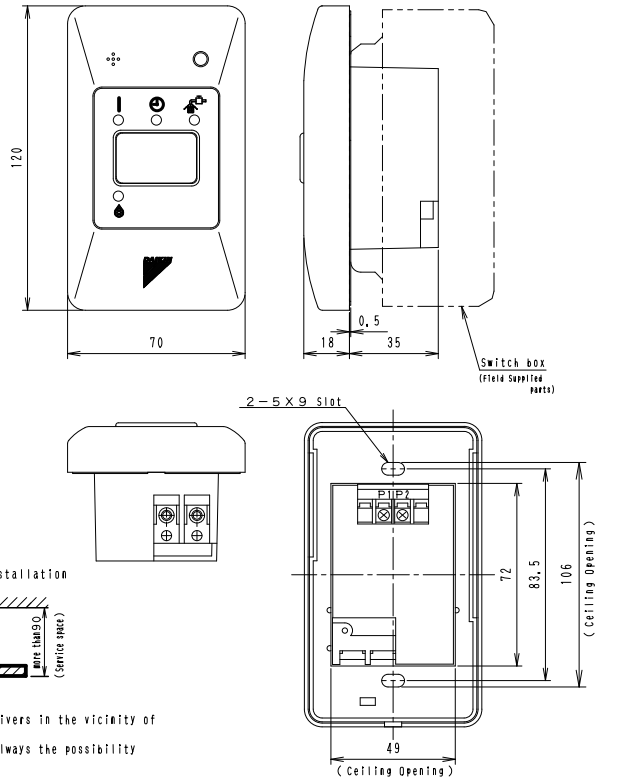

3D007898A

FXH(Q)

BRC7E63W... For Heat Pump

BRC7E66 ..... For Cooling Only

• REMOTE CONTROLLER DIMENSIONS

Unit (mm)

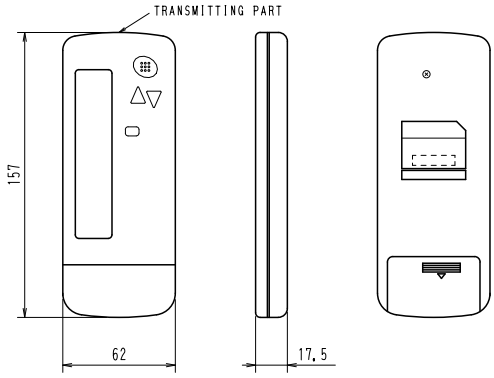

• REMOTE CONTROLLER HOLDER INSTALLATION PROCEDURE
<INSTALLATION TO WALL SURFACE>

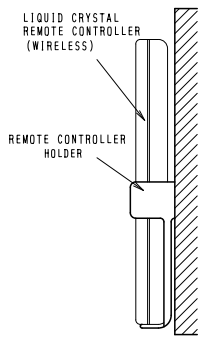

• RECEIVER INSTALLATION PROCEDURE

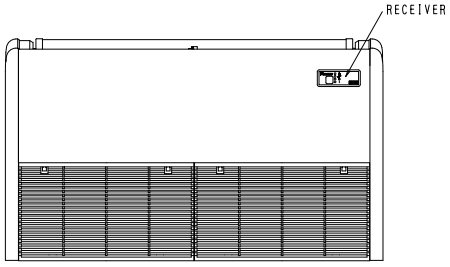

• RECEIVER DETAIL

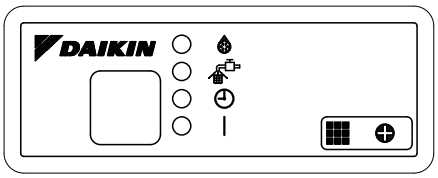

3D028963B

14

FXA(Q)

BRC7E618 ... For Heat Pump
BRC7E619 ... For Cooling Only

Unit (mm)

• REMOTE CONTROLLER DIMENSIONS

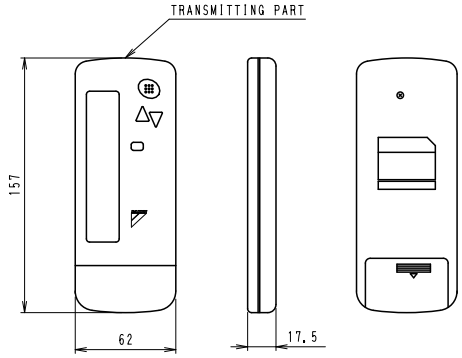

• REMOTE CONTROLLER HOLDER INSTALLATION PROCEDURE
< INSTALLATION TO WALL SURFACE >

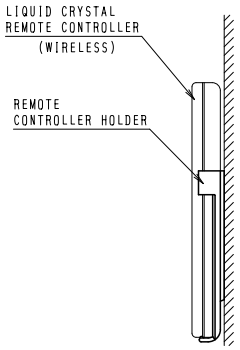

• RECEIVER INSTALLATION PROCEDURE



• RECEIVER DETAIL

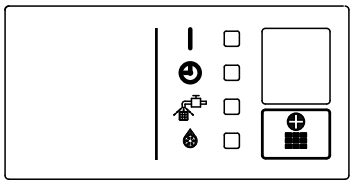

• WIRELESS REMOTE CONTROLLER KIT

WIRELESS REMOTE CONTROLLER KIT	INDOOR UNIT
BRC7E618 BRC7EA618(For H/P)	FXA～LVE(C)
BRC7E619 BRC7EA619(For C/O)	

3D034905B

FXUQ-M

BRC7C528W.. For Heat Pump
BRC7C529W.. For Cooling Only

Unit (mm)

• REMOTE CONTROLLER DIMENSIONS

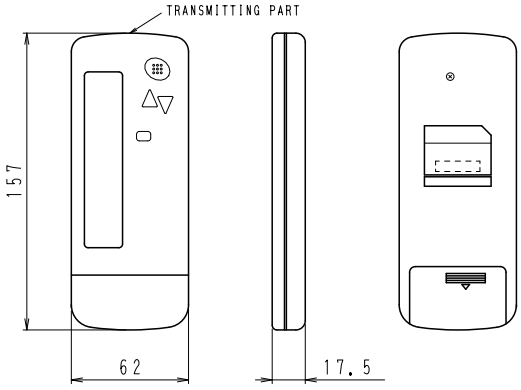

• REMOTE CONTROLLER HOLDER INSTALLATION PROCEDURE
<INSTALLATION TO WALL SURFACE>

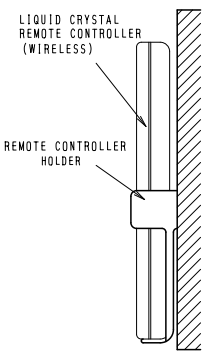

• RECEIVER INSTALLATION PROCEDURE

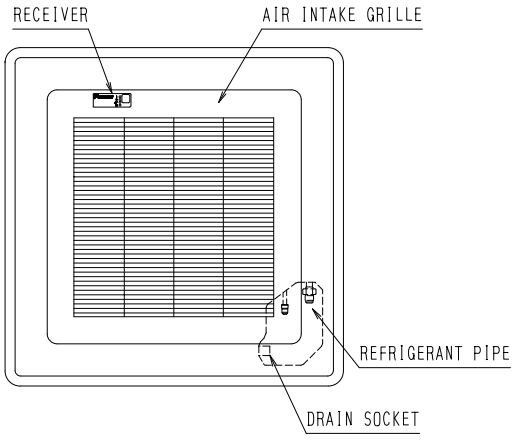

• RECEIVER DETAIL

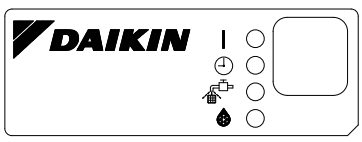

• WIRELESS REMOTE CONTROLLER KIT FOR EACH INDOOR UNIT

INDOOR UNIT	WIRELESS REMOTE CONTROLLER KIT	
	HEAT PUMP SYSTEM	COOLING ONLY SYSTEM
FUY71・100・125FJV1	BRC7C528W BRC7CA528W	BRC7C529W BRC7CA529W

3D014035A

4.3 <DCS302CA61> Central Remote Controller



64 groups (zones) of indoor units can be controlled individually same as LCD Remote controller.

- Max.64 groups (128 indoor units controllable)
- Max. 128 groups (128 indoor units) are controllable by using 2 central remote controllers, which can control from 2 different places.
- Zone control
- Malfunction code display
- Max. wiring length 1,000 m (Total : 2,000 m)
- Combination with Unified ON/OFF controller, schedule timer and BMS system
- Airflow volume and direction can be controlled individually for indoor units in each group operation.
- Up to 4 Operation/Stop pairs can be set per day by connecting a schedule timer.

4.3.1 Applied Model

Applied model		Remark
VRV system	VRV III series, VRV II series, VRV III-S series, VRV II-S series	
	VRV PLUS series	
	VRV Inverter “K” series	
	VRV Heat recovery system	
	VRV-W II	Water Cooled VRV
	SkyAir series	Interface adaptor for SkyAir series is required for each indoor unit.

4.3.2 System Configuration

System Outline

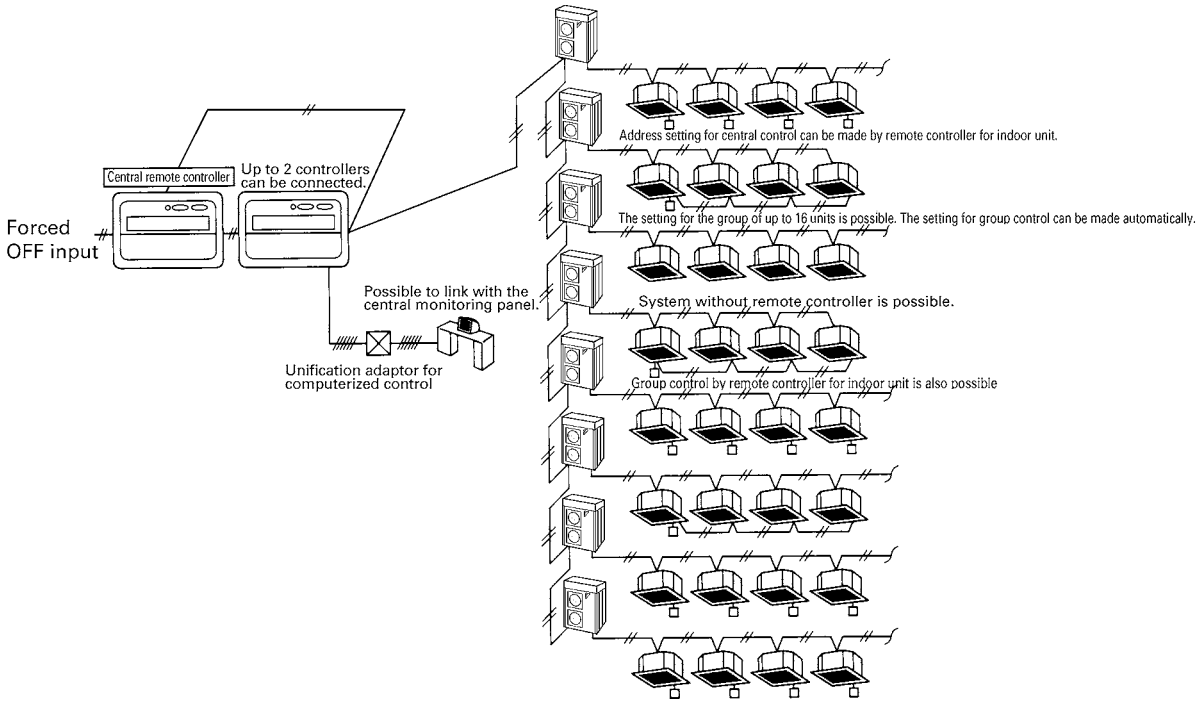

14

System Configuration (Group / Zone Control)

■ Group control

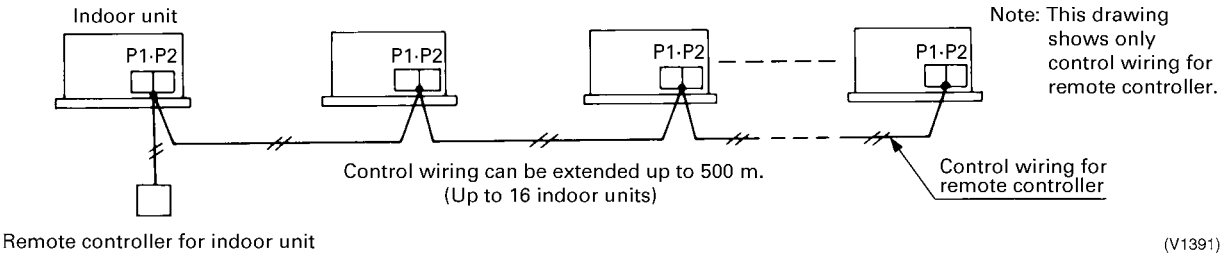

- The group means the indoor units connected by the same control wiring for remote controller (connected to terminal P1 and P2) and all the unit in group have “the same setting” and “the same operation”.
- The indoor units in the group are controlled by the remote controller for indoor unit.
- The number of indoor units in one group is up to 16 units.

■ Zone control

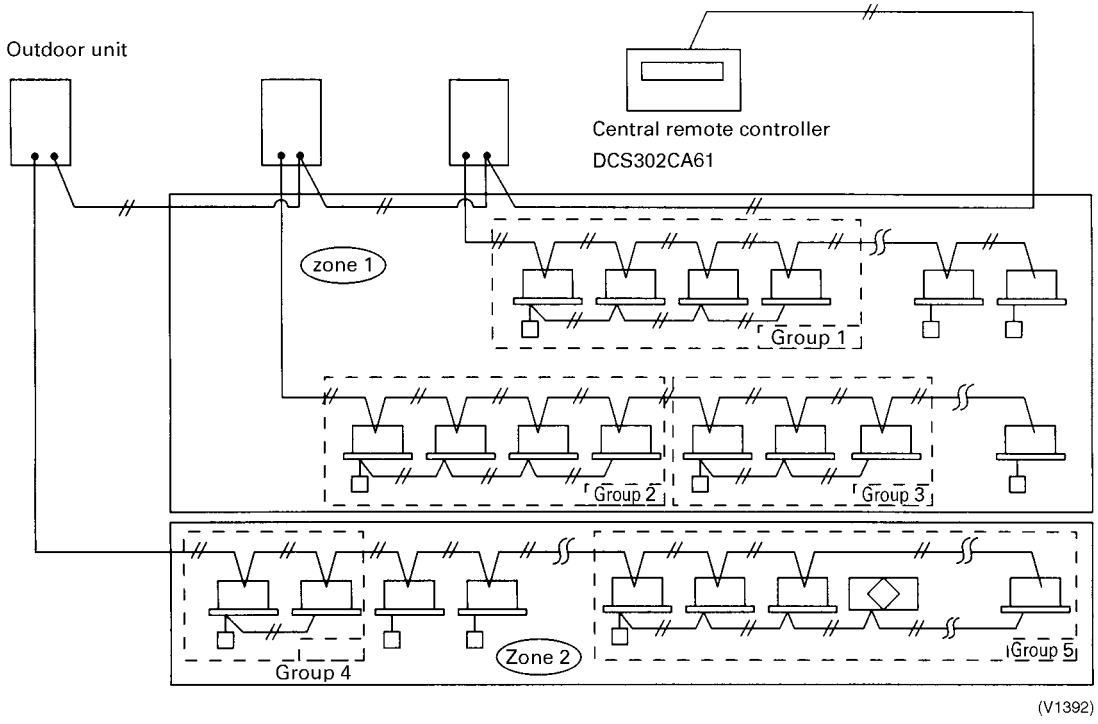

- The zone means the indoor units connected by the same control wiring for central remote controller (connected to terminal F1 and F2) and all the unit in zone have “the same setting”.
- The zone control of the indoor unit is operated by the central remote controller.
- From 1 up to 64 zones can be controlled by the central remote controller.
- The number of groups you can set in one zone is from 1 up to 64 groups.
- Up to 16 units can be set in one group, and up to 64 groups (up to 128 units) can be connected.

System Configuration (Control by 2 central remote controllers)

- Up to 128 indoor units can be connected in one system.
- 2 or 4 central remote controllers are required. It is possible to control the same unit from 2 locations.
- Up to 16 unified ON/OFF controllers can be connected. (8 controllers × 2 locations)
- One schedule timer can be connected.

Note:

1. Electrical power should be supplied to each central remote controller. (Single phase 100~240V)
2. When you control by 2 central remote controllers, be sure to set SS3 by the initial setting.

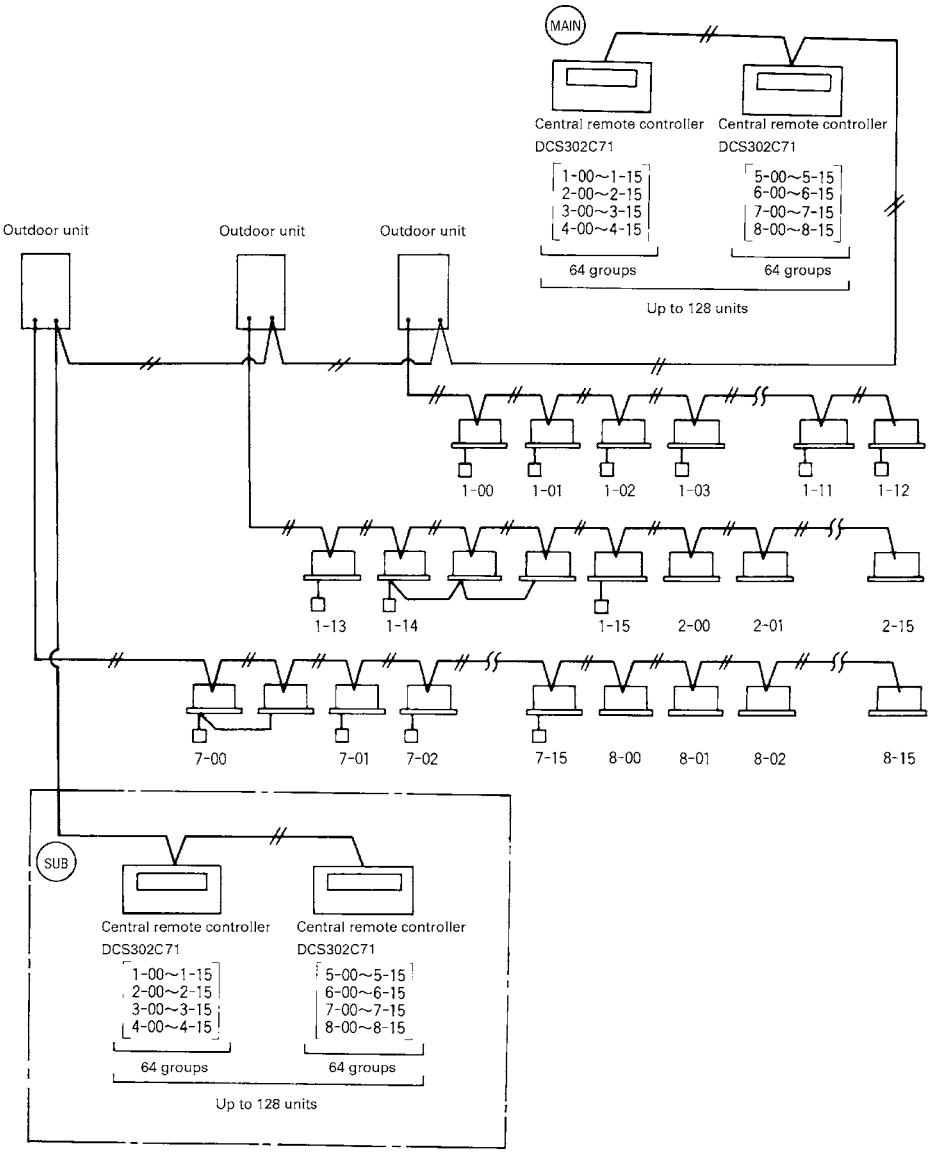

Note:

The following setting cannot be made by the sub side. Be sure to set by the main side.

- Operation code setting

14

Caution for wiring of BEV unit system with Central Remote Controller

When the BEV unit system, such as FXAQ/FXLQ-MV1, FXUQ-MV1, and FUYP-BV1 are connected to the Central Remote Controller, the wiring becomes more complicated than that of general VRV system.
Please take care as follows when wiring.

[NG Example]

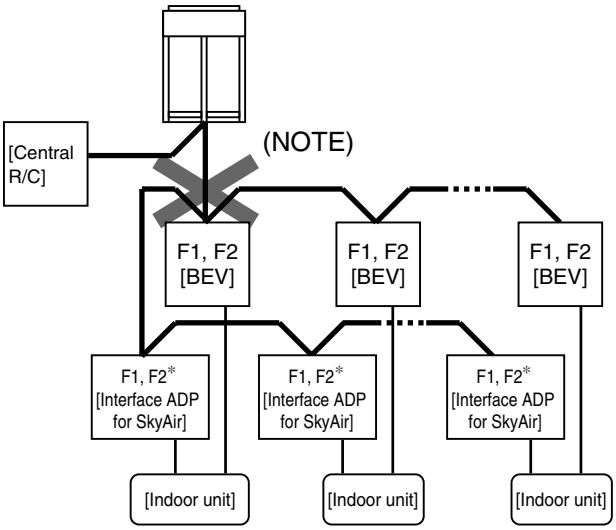

[Wiring Example (1)]

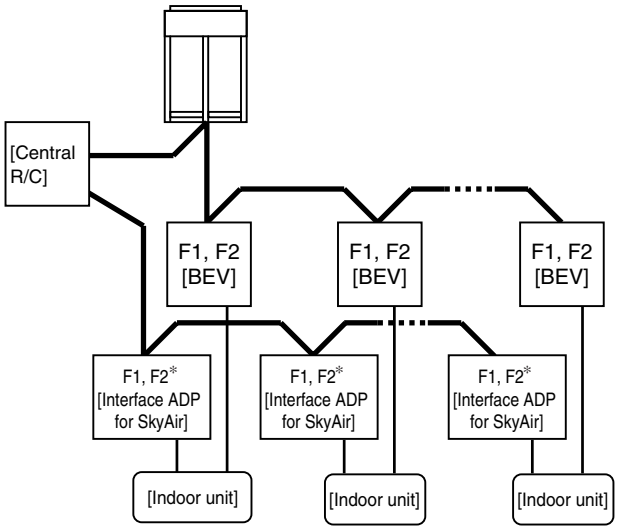

(NOTES)

1. When 3 or more wirings are branched from the same terminal block, use a relaying terminal block of field supply.
2. In the Wiring Example (1) and (2), 3 wires are not connected on the same terminal block.
3. * FXAQ-M : Interface adapter for SkyAir series is not necessary.
   Interface adapter for SkyAir is required when connecting with optional controller for centralized control.
4. Address setting is required for only indoor units (ADP connection) when BEV units are controlled by Central Remote Controller. Therefore, BEV connected indoor units are controlled under the number of indoor units like standard indoor unit.
   (BEV is not counted as an indoor unit.)
   With respect to the limitation to the number of units connected, please count it as the number of indoor units.

[Wiring Example (2)]

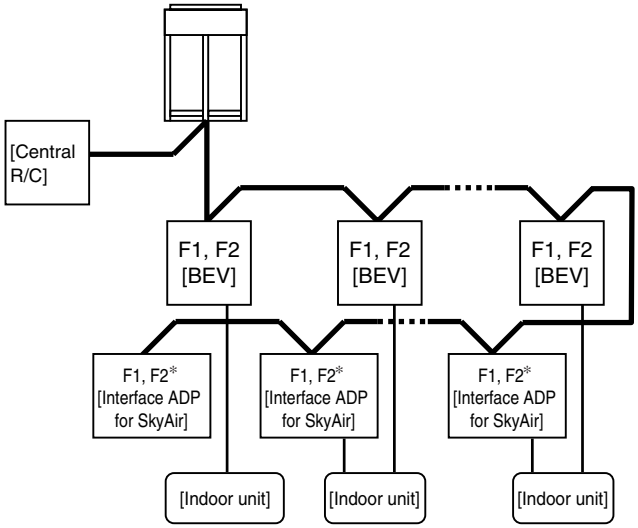

4.3.3 Specifications / Dimensions

Specifications

	DCS302CA61
Power supply voltage / frequency	AC100~240V ±10% 50/60Hz
Power consumption	Max. 8W
Setting data backup	Non-volatile memory (Data preserved semi-permanently)
Effects of instantaneous power failure	No effect for 20 mili-sec. or less
Forced OFF input Operation on the local side cannot be carried out during forced OFF input.	■ No-voltage normal open contact ■ Micro-current contact capable of handling 16VDC and approx. 10mA. ■ Max. 150 m cable length
Power supply for schedule timer	Power can be supplied to schedule timer. (Max. 1 unit)
Operating ambient temperature /humidity condition	-5~40 °C, 95% RH or less (no condensation)
Size (width × height × depth)	180×120×64.5 mm exposed portion of front panel : 16 mm
Weight (Mass)	Approx. 420 g

Dimensions

DCS302CA61

Unit (mm)

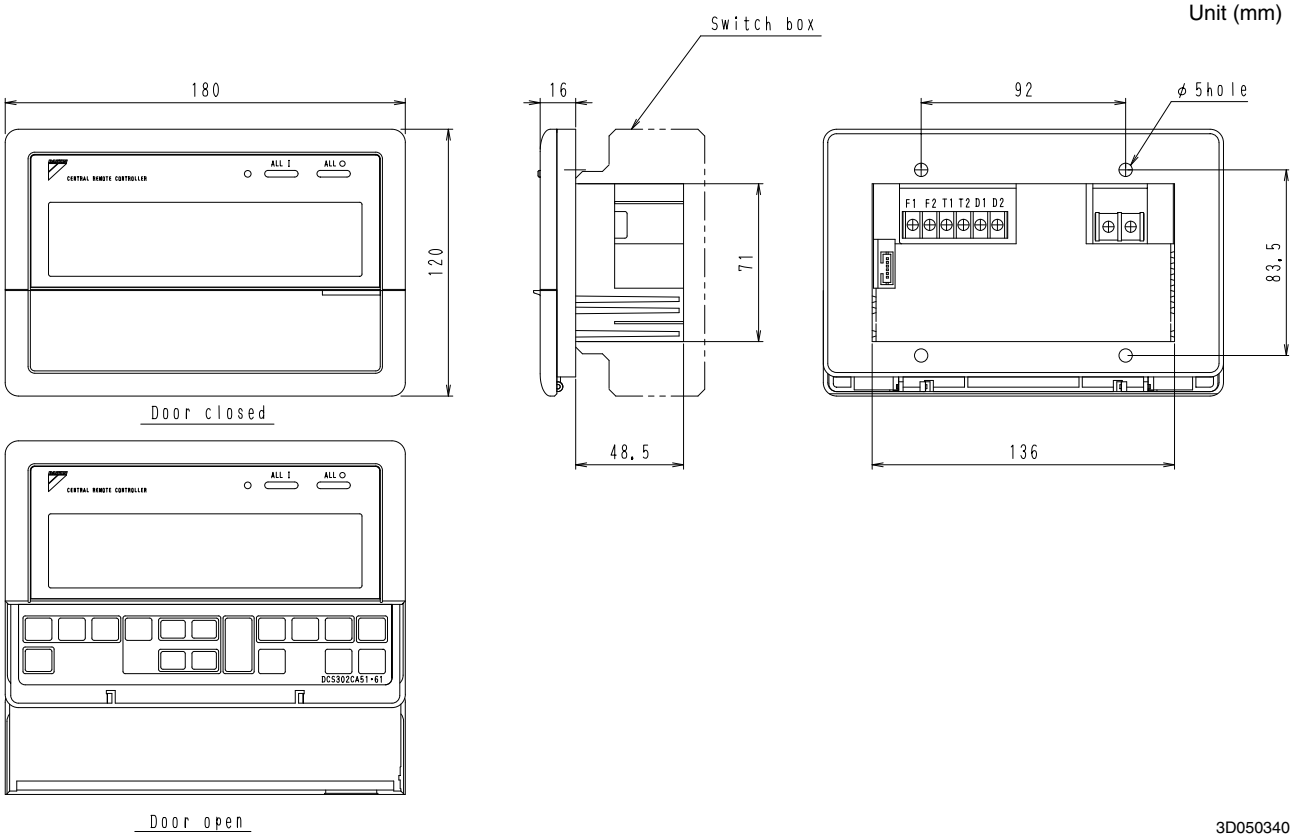

3D050340

14

4.3.4 Names and Functions of Operating Part

■ Display part DISPLAY (OPERATION MODE) Displays operating state.

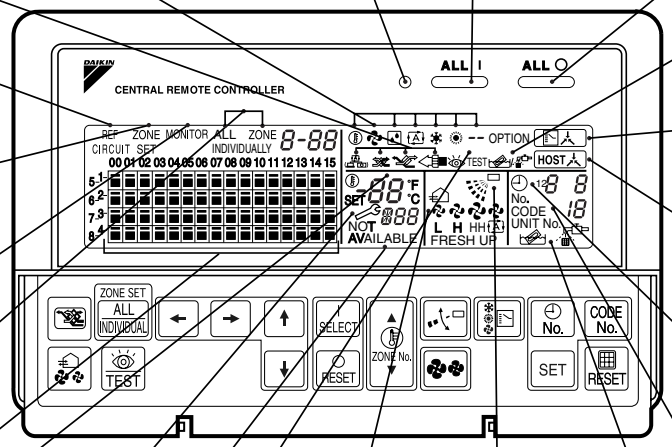

"[icons]" "[icons]" "[icons]" "[icons]" DISPLAY (VENTILATION CLEANING DISPLAY)

This is displayed when a Ventiair total enthalpy heat exchanger unit or other such unit is connected.

"[icons]" "[icons]" "[icons]" "[icons]" "[icons]" "[icons]" "[icons]" "--" DISPLAY (OPERATION MODE)

Displays operating state.

OPERATION LAMP (RED)

Lit white any of the indoor units under control is in operation.

UNIFIED OPERATION BUTTON

Press to operate all indoor units.

UNIFIED STOP BUTTON

Press to stop all indoor units.

"[icons]" DISPLAY (TIME TO CLEAN)

It lights up when any individual unit (group) has reached the time for the filter or element to be cleaned.

" REF CIRCUIT " DISPLAY (REFRIGERANT SYSTEM DISPLAY)

This indication in the square is lit while the refrigerant system is being displayed.

" [icons] " DISPLAY (COOLING/HEATING SELECTION PRIVILEGE NOT SHOWN)

For zones or individual units (groups) for which this is displayed, cooling and heating cannot be selected.

" ZONE SET " DISPLAY (ZONE SETTING)

The lamp is lit while setting zones.

" HOST " DISPLAY (UNDER HOST COMPUTER INTEGRATED CONTROL)

While this display is lit up, no settings can be made. It lights up when the upper central machines are present on the same air conditioning network.

" MONITOR " DISPLAY (OPERATION MONITOR)

The lamp is lit while operation is being monitored.

" No. " DISPLAY (TIME NO.)

Displays the operation timer No. when used in conjunction with the schedule timer.

" ALL " " ZONE " " INDIVIDUALLY " DISPLAY

The status displays indicates either batch functions or which zone or individual unit (or group) are being used.

OPERATION MONITOR

Each square displays the state corresponding to each group.

" CODE UNIT No. 18 " DISPLAY (OPERATION CODE AND UNIT NUMBER DISPLAY)

The method of operation (remote controller prohibited, central operation priority after-press operation priority, etc.) is displayed by the corresponding code.This displays the numbers of any indoor units which have stopped due to an error.

" [icons] " DISPLAY (PRESET TEMPERATURE)

Displays the preset temperature.

" [icons] " DISPLAY (MALFUNCTION CODE)

This displays (flashes) the content of errors when an error failure has occurred.In maintenance mode, it displays the latest error content.

"[icons]" "L" "H" "HH" "[icons]" "FRESH UP" DISPLAY (VENTILATION STRENGTH/SET FAN STRENGTH DISPLAY)

This displays the set fan strength.

" [icons] " DISPLAY (FAN DIRECTION SWING DISPLAY)

This displays whether the fan direction is fixed or set to swing.

"NOT AVAILABLE" DISPLAY(NO FUNCTION DISPLAY)

If a function is not available in the indoor unit even if the button is pressed, "NOT AVAILABLE" is may be displayed for a few seconds.

"[icons]" "[icons]" DISPLAY (TIME TO CLEAN AIR CLEANER ELEMENT/ TIME TO CLEAN AIR FILTER)

Displayed to notify the user it is time to clean the air filter or air cleaner element of the group displayed.

" TEST " DISPLAY (INSPECTION/TEST)

Pressing the maintenance/test run button(for service) displays this. This button should not normally be used.

■ Control Section

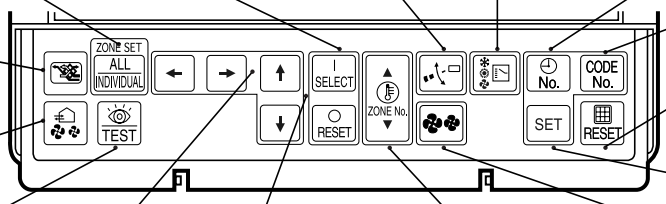

ALL/INDIVIDUAL BUTTON

Pressing this button scrolls through the "all screen", "zone screen", and "individual screen".

ON/OFF BUTTON

Starts and stops ALL, ZONE, and INDIVIDUAL units.

FAN DIRECTION ADJUSTMENT BUTTON

This button is pressed when setting the fan direction to "fixed" or "swing".

OPERATION MODE SELECTOR BUTTON

This sets the operation mode. The dry setting cannot be done.

TIME NO. BUTTON

Selects time No. (Use in conjunction with the schedule timer only).

VENTILATION MODE BUTTON

This is pressed to switch the ventilation mode of the total enthalpy heat exchanger.

CONTROL MODE BUTTON

Selects control mode.

VENTILATION STRENGTH ADJUSTMENT BUTTON

This button is pressed to switch the ventilation strength ("fresh up") of the total enthalpy heat exchanger.

FILTER SIGN RESET BUTTON

This button is pressed to erase the "clean filter" display after cleaning or replacement.

SET BUTTON

Sets control mode and time No.

INSPECTION/TEST RUN BUTTON (FOR SERVICE)

Pressing this button scrolls through "inspection", "test run", and "system display". This button is not normally used.

FAN STRENGTH ADJUSTMENT BUTTON

Pressing this button scrolls through "weak", "strong", and "fast".

ARROW KEY BUTTON

This button is pressed when calling an individual indoor unit or a zone.

ZONE SETTING BUTTON

Zone registration mode can be turned on and off by pressing the start and stop buttons simultaneously for at least four seconds.

TEMPERATURE ADJUSTMENT BUTTON (ZONE NUMBER BUTTON)

This button is pressed when setting the temperature. Select the zone number if any zones have been registered.

3P124623-3A

4.3.5 Description of Functions

Individual Screen, all Screen, Zone Screen

This controller can perform operations in the individual screen, all screen, or zone screen.

- Individual screen
  The individual screen is used when performing group operations.
- All screen
  The all screen is used when performing operations for all units at once.
- Zone screen
  The zone screen is used when performing zone operations.

Basic functions

	Descriptions of outline
Individual/Zone control	Up to 64 groups (Max. 128 units and max. 16 units per group) of indoor units can be controlled by individually or by zone.
Unified ON/OFF	ON/OFF can be set for each zone, and can be controlled simultaneously for entire system by push button or by contact signal from outside.
Malfunction code display	The status of each group is always displayed, such as ON/OFF, error, etc. If the error occurs, it displays the contents of error by malfunction code through the self-diagnosis function.
Connection of unification adaptor for computerized control	By connecting the unification adaptor for computerized control (option), it can be linked with the central monitoring panel and etc. by contact signal, which enables you to operate ON/OFF simultaneously or monitor the operating status.
Remote control acceptance/rejection	It is possible to restrict the function of local remote controller. (Only ON operation rejection, or ON/OFF operation rejection)
2 central controllers	By connecting two central remote controllers, the same air-conditioner can be controlled from 2 locations (By tenant or administration office.)

Zone control functions

	Descriptions of outline
Zone control	The zone function is a function to control one or more group of air-conditioner, and the operation setting such as ON/OFF etc. can be made by zone.
Up to 64 zones	Up to 64 zones (64 groups for each zone) can be set. However, the group setting spreading over the plural zone cannot be set.
Zone register	When the power is supplied first time, each group is registered in each respective zone. If you can simply register the several groups in the same zone by switch, so that you can have simultaneous operation of the units in that zone immediately. (The operation of temperature setting and etc. is also controlled by zone simultaneously.)
Zone setting	By adding the zone setting function (Zone “0”) from the central remote controller, you can set the same setting for all the zone registered by single operation.
ON/OFF control of zone	For example, if there are three groups in one room and if you register these three groups as one zone, you can operate these three groups simultaneously by single operation (ON/OFF, temperature setting etc.). You still can operate each group individually by local remote controller.
Maintaining zone setting	Even if the power is turned off, the zone configurations set are maintained semi-permanently. (saved in non-volatile memory)
Cool/Heat changeover by zone	The cool/heat changeover can be made by zone. However, it is required to have a master group for Cool/Heat changeover in that zone.
Batch operation	The same setup is possible at one operation to all the groups registered on the "All" screen.
No local remote controller	Even if there is no local remote controller, you can still perform the same operation. There is no problem even if no remote controller is connected. (However, in this case, each one air-conditioner consists of one group.)
Combination with other controllers	You can also combine with a unified ON/OFF controller and a schedule timer. (Refer to the system configuration for details.)
Connection to central monitoring panel	You can also combine with an Interface for use in BAC net® and a data station in order to connect to the central monitoring panel. A parallel interface can also be connected.

Cool/Heat changeover and eligibility setting

	Descriptions of outline
Possible control	The operation mode of the outdoor unit can be changed by the local remote controller or by the central remote controller. (For test operation, change setting of cool/heat selector switch of the outdoor unit.)
Remote controller acceptance/rejection	You can set the remote controller acceptance/rejection on the central remote controller by the local remote controller.
"NOT AVAILABLE" DISPLAY (NO FUNCTION DISPLAY)	If a function is not available in the indoor unit even if the button is pressed, "NOT AVAILABLE" is may be displayed for a few seconds.

Note:

Refer to the next page for the selection of cool/heat mode (eligibility for cool/heat changeover).

■ **Cool/heat Selection Eligibility Setting by Remote Controller for Indoor Unit**

The outdoor unit of can freely be selected the operation mode (fan, dry, auto[Heat Recovery only], cooling or heating) by the remote controller for indoor unit. However, you have to set the selection eligibility for fan, dry, cooling and heating operation on the one of the remote controller out of the indoor units connected to the outdoor unit.
(Only remote controller having the selection eligibility can change the operation mode.)

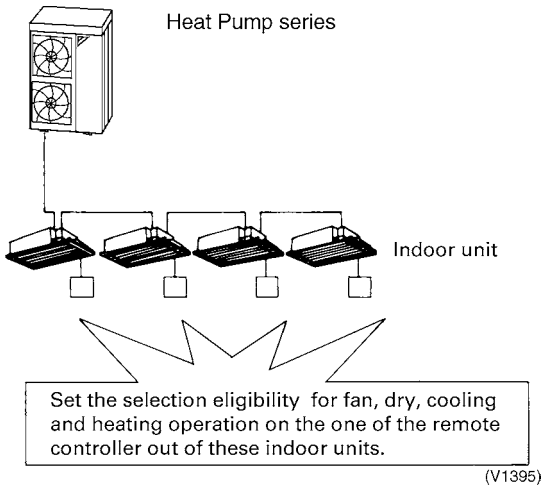

(V1395)

■ **Setting method of the selection eligibility for cool/heat**

1. Preparation

■ When turning on the power first time, "CHANGEOVER UNDER CONTROL" sign blinks.

When you set;

1	Continue to push Operation switch for about 4 seconds. sign blinks on all the indoor units connected to the outdoor unit or BS unit. 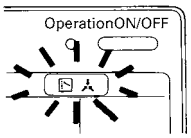

2. Selection Eligibility Setting

2	Push Operation switch of the remote controller, which you want to set the selection eligibility. This completes the setting procedure. Cool/heat selection eligibility is set for that remote controller, and sign goes off. still blinks on all other remote controllers.

3. Operation Mode Changeover

3	Push Operation switch of remote controller having the selection eligibility (The remote controller not displaying sign) several times to select the desired operation mode. [Fan], [Dry], [Auto](only for Heat Recovery series),[Cooling] and[Heating] mode are selected each time you push the [Operation switch]. Operation mode of other remote controllers, which has no selection eligibility, is also switched automatically.

(V1397)

■ **Description of operation and its function**

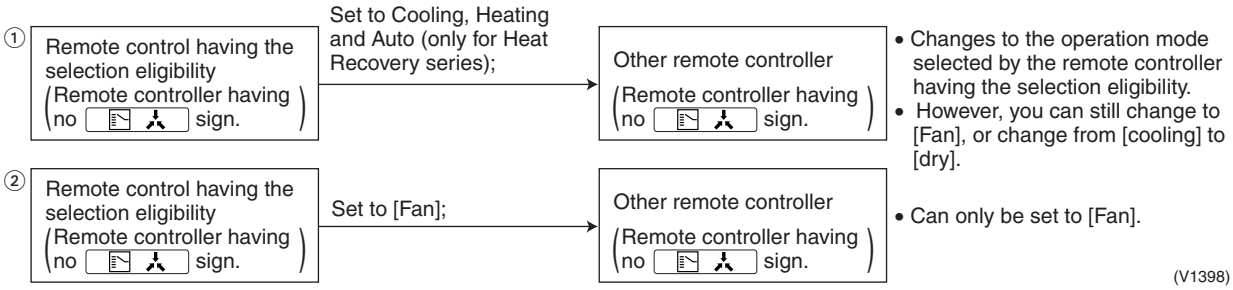

∗ It is also possible to set the selection eligibility on the wireless remote controller.
It does not possile to set the "Dry" by the Central Remote Controller.

Control with Two Central Remote Controllers

The central remote control equipment is newly designed to "B" type, which has been added with a new control function for 2 central remote controllers. However, be sure that the relation between Main/Sub of the central remote controller is different from those of local remote controllers.

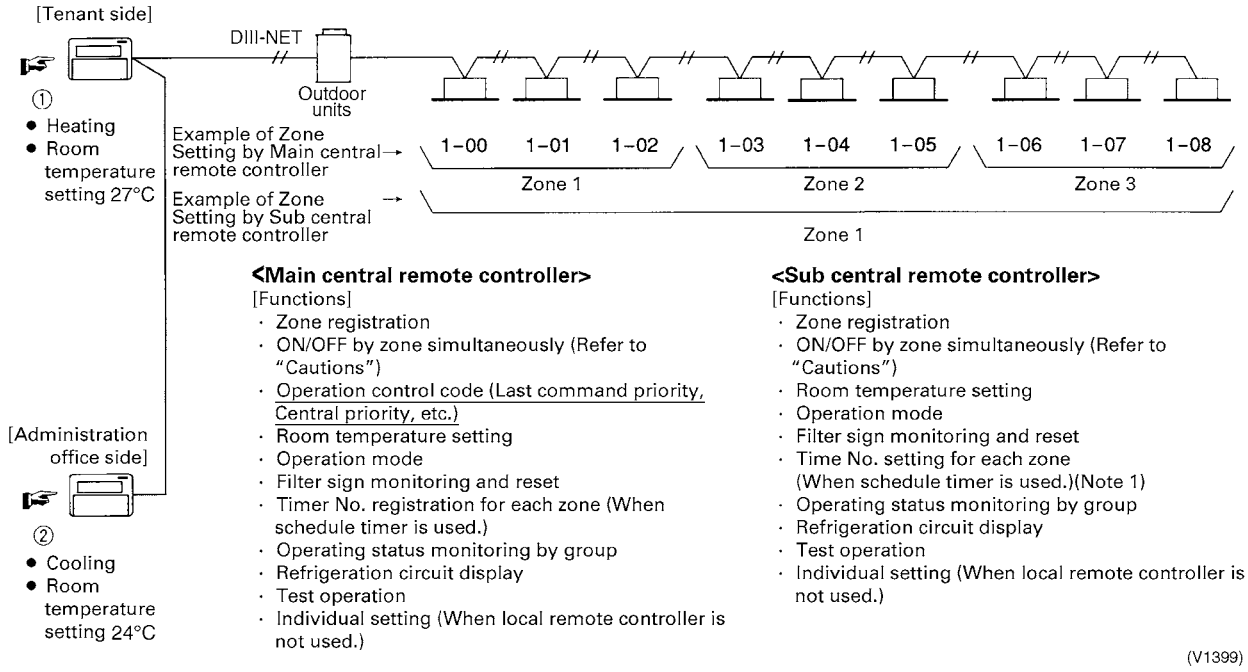

Note:
Be sure that if timer No. is registered by the sub central remote controller, [Timer mode acceptance for local remote controller (mode no. 8,9,18, and 19)] for the same units set by the Main remote controller becomes meaningless (operates when time comes.).

<Explanation of the above figure>
If you operate the central remote controller in the sequence of ① and ②, the indoor unit is set for cooling / temperature setting 24°C.
However, the display of zone setting of the master remote controller remains at heating / temperature setting at 27°C.

<Cautions>
- ■ Operation code cannot be set by the sub central remote controller.
- ■ Combined zone operation can only be set by zone registration of the main central remote controller.
- ■ Both main and sub central remote controller are operated by a Last priority command for the functions other than the above.
  However, the display on the central remote controller cannot be changed by each other. (On the display for the group, you can monitor the present operation status.)

14

Sequential Start

<Operation command from central control equipment>

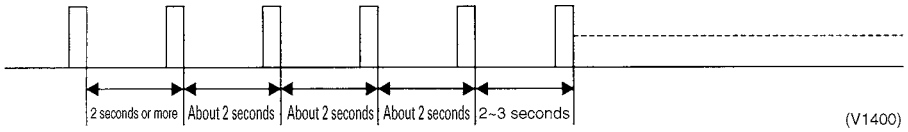

Each unit operates in sequence. For example, if you set the simultaneous operation by the central remote controller, which controls 1-00 ~ 4-15 and 5-00 ~ 8-15 groups, two outdoor units start simultaneously.

Registering Zone

It is possible to set multiple groups as one zone and control each zone separately.
No zones are registered when the unit is shipped from the factory.
Zone registration can be done in the individual screen, all screen, or zone screen.

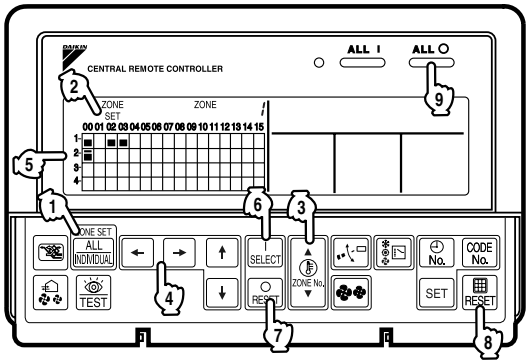

Registration

1. **Pressing the "ALL/INDIVIDUAL" button for four seconds. Displays ZONE SET.**
   Zone Number 1 will be displayed, and if there are any groups already registered in the displayed zone, a " ■ " will light up on the operation monitor.
2. **Select the Zone Number to be registered using the "ZONE NUMBER" button.**
   Keeping the button pressed down will move it rapidly.
3. **" ▬ "to the group you wish to register using the arrow keys.**
   Keeping the button pressed down will move it rapidly.
4. **Press the "SELECT" button to register that group to the zone.**
   The " ■ " display lights up on all the selected units.
   Pressing the "RESET" button removes the group from that zone, and " ■ " goes off.
   Repeat steps 3 and 4 until all the units you wish to register to the zone have been added.

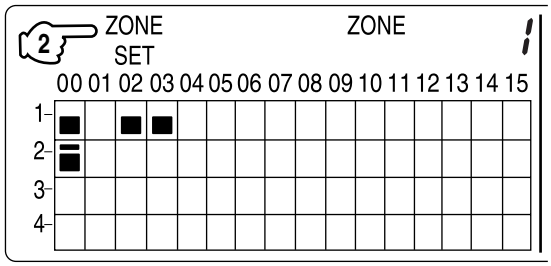

In this example, a screen is shown with units 1-00, 1-02, 1-03, and 2-00 registered to Zone Number 1.

5. **Repeat steps 2 to 4 to register to the next zone.**
6. **Once zone registration is complete, press the "ALL/INDIVIDUAL" button to turn off "ZONE SET" display and return to the individual screen.**
   The display returns to the normal screen if nothing is done for one minute when in zone registration mode.

(NOTE)

- It is impossible to register one group to several different zones.
  If this is done, the last zone registered to will be valid.

3P124623-3A

Batch deletion of zone registration

1. ☞9☜ Pressing the "ALL ◯ " for at least four seconds while ☞8☜ pressing the "FILTER SIGN RESET" button when ☞2☜ "ZONE SET" is displayed will delete all zone registrations.

The zone registrations for all units will be lost.

3P124623-3A

Zone setting

Set the screen of [Zone 0] on the display, and if you set the following mode, you can set to the all zone registered on the central remote controller by one operation.

- Operation mode
- Control mode
- Room temperature setting
- Time NO.

Display of "NOT AVAILABLE"

If indoor units are not available for functions subject to control even when attempting to operate these functions from DCS302C(A)61, the system will display this "NOT AVAILABLE" message.
This message is displayed for a period of approximately two seconds. However, if any button corresponding to functions not available while the "NOT AVAILABLE" is displayed, it will be displayed for a period of another approximately two seconds.
The following section shows the conditions for this display.

On the Individual screen,
When the indoor unit is chosen, "NOT AVAILABLE" will be displayed if the "VENTILATION MODE ", "VENTILATION STRENGTH" button is pushed.

When an indoor without FAN DIRECTION, FAN STRENGTH is chosen, "NOT AVAILABLE" will be displayed if "FAN DIRECTION", "FAN STRENGTH" button is pushed.

On the Zone screen and All screen, the FAN DIRECTION ADJUSTMENT, FAN STRENGTH ADJUSTMENT, VENTILATION MODE, and VENTILATION STRENGTH buttons are disabled.
Pressing any of these buttons will display the "NOT AVAILABLE" message on the screen.

With the Schedule Timer not connected, even if the "Timer No." button is pressed, the "NOT AVAILABLE" message will not be displayed.
While in double central control function, even if the OPERATION CODE button is pressed, the "NOT AVAILABLE" message will not be displayed.

Monitor in zone unit

Operating and monitoring the system even in group or zone unit has become enabled from the DCS302C(A)61. Monitoring in zone unit is conducted taking an indoor unit with a lower address within the zone as the Main Indoor Unit.

For monitoring the zone settings: The following screens are displayed.

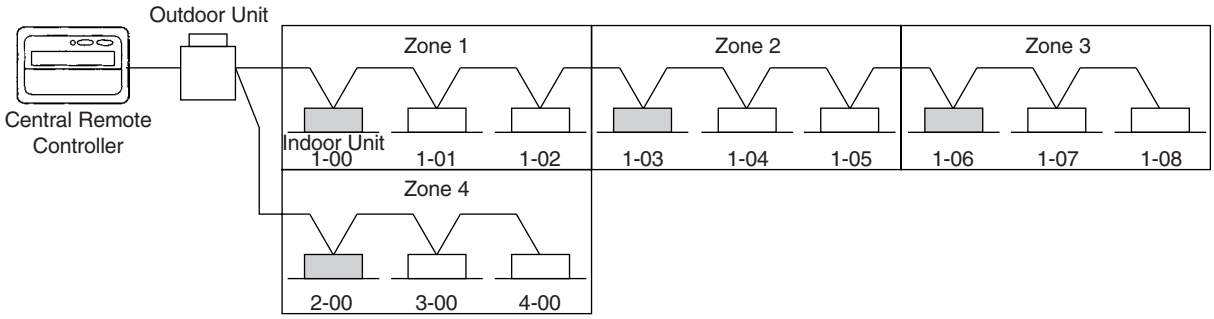

	Main Indoor Unit	Operation Code Timer No.	Temp. Display	Operation Mode
Zone 1	1-00	1-00	1-00	1-00
Zone 2	1-03	1-03	1-03	1-03
Zone 3	1-06	1-06	1-07	1-07
Zone 4	2-00	2-00	N/A	N/A

If the system is operated on the Zone screen, one and the same setting will be made on all indoor units registered with the zone.
On the Zone screen, ventilation mode is only monitored. In order to change ventilation mode, be sure to use the Individual screen.

On the Batch screen, operating and monitoring is also enabled, thus monitoring an indoor unit with a lower address within the scope of control.

Changing the Fan Direction and Fan Strength

This changes the fan direction and strength settings in the air conditioner.
Changing the fan direction and strength is done in the individual screen.

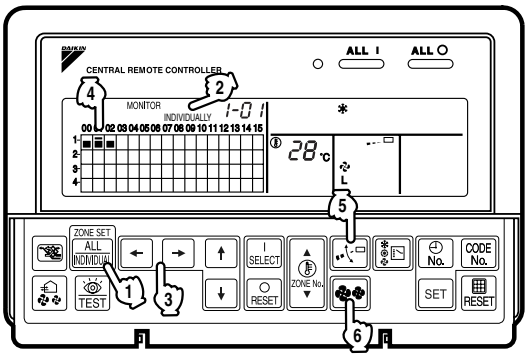

[Registration]

1. **Press the "ALL/INDIVIDUAL button" to enter the individual screen.**
   The unit will enter the individual screen automatically if nothing is done for one minute.
2. **Using the arrow keys, move the " " to select the units to fan direction adjustment or fan strength adjustment.**
   Keeping the button pressed down will move it rapidly.
3. **Press the "FAN DIRECTION ADJUSTMENT" button.**
   This sets "fixed" or "swing" for the fan direction.
   Press the "FAN STRENGTH ADJUSTMENT" button.
   Pressing this button scrolls through " L ", " H " and " HH ".
   Depending on the indoor unit, only " L " and " H " may be available.

The functions included in the indoor units may vary.Pressing a button for a function which is not available will cause "NOT AVAILABLE" to be displayed.

3P124623-3A

Changing the Ventilation Mode and Ventilation Strength

This changes the ventilation mode and strength settings in the total enthalpy heat exchanger.
Changing the ventilation mode and strength is done in the individual screen.

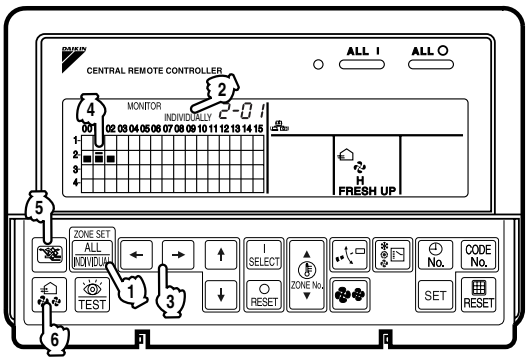

[Registration]

1. **Press the "ALL/INDIVIDUAL button" to enter the individual screen.**
   The unit will enter the individual screen automatically if nothing is done for one minute.
2. **Using the arrow keys, move the " " to select the units to ventilation mode or ventilation strength adjustment.**
   Keeping the button pressed down will move it rapidly.
3. **Press the "VENTILATION MODE" button.**
   It will scroll through " " → " " → " " → " " .

14

⑥ Press the "VENTILATION STRENGTH ADJUSTMENT" button.

It will scroll through " L " → " H " → " L FRESH UP " → " H FRESH UP " → " L ".

The fresh up function may not be available depending on the connected unit model.
The functions included in the indoor units may vary.Pressing a button for a function which is not available will cause "NOT AVAILABLE" to be displayed.

■ **Ventilation Mode and Amount**
If these are changed using the remote controller depending on the unit model, they cannot be displayed on the central remote controller.
To monitor the ventilation mode and amount, check the values on the remote controller.

3P124623-3A

Timer Number Setting

(Only when used with the schedule timer)

Using this together with the schedule timer makes it possible to set on and off times four times a day.
4 times of ON/OFF time can be set up per day. Because, two settings of ON/OFF time are possible to one Schedule Timer and two Schedule Timers can be registered into a Central Remote Controller.

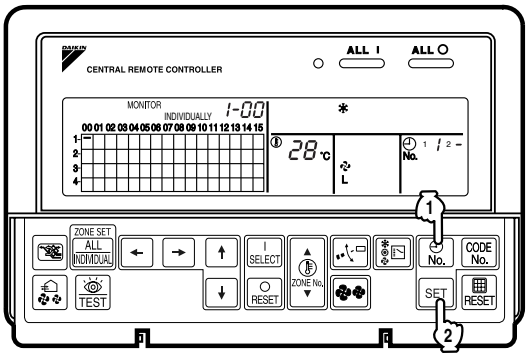

[Registration]

1. **① Pressing the "TIMER NO." button causes the number set for timer number 1 to blink.**
   If no timer setting has been made " – " will be displayed.Select the desired timer number by pressing the ① "TIMER NO." button.

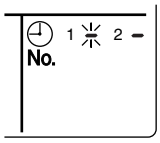

2. **② Once the desired timer number is displayed, press the "SET" button.**
   Press the ② "SET" button within 10 seconds after the timer number is displayed.
   The display will return to how it was after 10 seconds.
   The display for timer number 1 will stop blinking and then timer number 2 will start blinking.

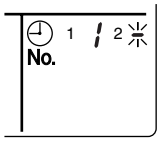

3. **① Select the desired timer number by pressing the "TIMER NO." button.**
   Once the desired timer number is displayed, ② press the "SET" button.
   The display for timer number 2 will stop blinking.
   The " No. " display will disappear after 3 seconds.

   Select " – " in the timer number when you do not wish to set a timer number.
   It is possible to set only one timer number.
   (The times for turning the unit(s) on and off twice a day can be set with a single timer number.)

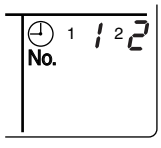

- **Timer Number Setting**
  Group control: select the unit in the individual screen and set the timer number.
  Batch control: set the timer numbers for all connected units.
  Zone control: set the timer numbers for all zone-registered units.
  Call up the zones which you wish to set in the zone screen and set the timer numbers.
- **Since the timer number will be set to after-press priority, the timer number in the last screen set will be valid for the connected units.**
  Example 1
  Setting timer number 1 for unit 1-00 to "1" and timer number 2 to "2" in the individual screen and then setting timer number 1 to "3" and timer number 2 to "4" in the batch screen causes the timer numbers for all units to be set, so timer number 1 for unit 1-00 will be "3" and timer number 2 will be "4".
  Example 2
  To prevent leaving units on, timer number 1 is set to "5" in the batch screen.
  Setting timer number 1 in zone number 1 to "–" in the zone screen after that will change the timer number for zone number 1, so the setting to prevent leaving the units on will be lost for zone number 1 only.
  If a timer number is set incorrectly by accident, redo the setting in the desired screen.
- **What happens when the timer number on time and off time are set to the same time**
  When the on time and off time are set to the same time for the same timer number, operation does not change.
  When the on time and off time are set to the same time for different timer numbers, the off time is given priority.
  When using timer operation, make sure the times do not overlap when setting the program of the schedule timer.

3P124623-3A

14

4.3.6 Wiring Instructions

Wiring instructions

For control wiring of DIII-NET, you can select from the following 3 types of wiring methods.

1. Series method :

Wiring is connected by a single line from the central controller.

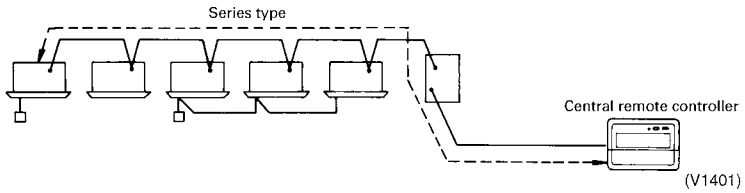

2. Bus method :

Up to 16 branches is possible. Never diverge the sub-branches from the branch line.

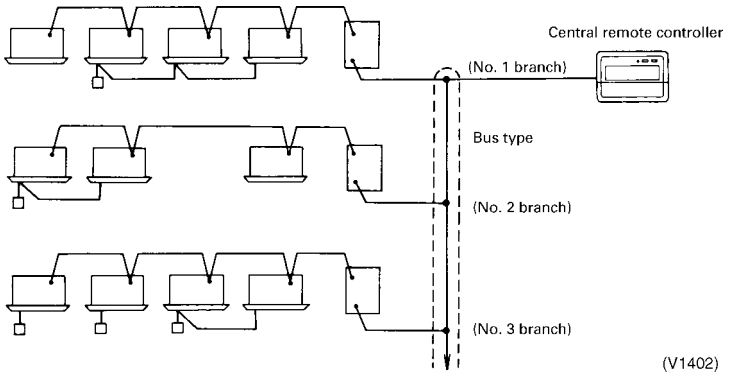

3. Star method :

Up to 16 branches is possible. Never diverge the sub-branches from the branch line.

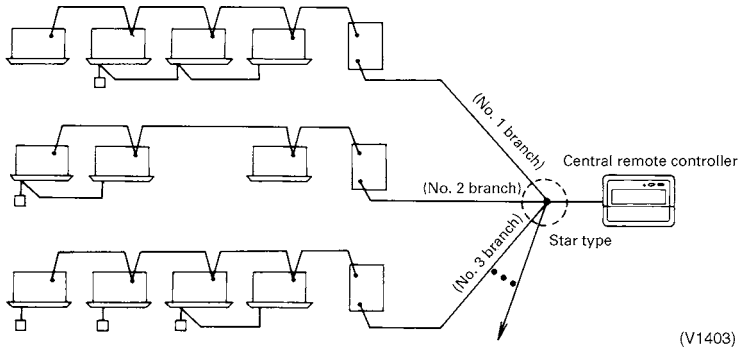

Specifications of transmission wiring

Be sure to use either 2-core sheathed vinyl cord or cable as mentioned below. The size of wire should be selected in the range of 0.75~1.25 mm².

■ Vinyl cab tire round cord	VCTF	JISC 3306
■ Vinyl insulated, vinyl sheathed cable for control	CVV	JISC 3401
■ Round vinyl sheathed cable for control	CVS	JISC 3401
■ 600V vinyl cab tire cable	VCT	JISC 3312
■ Polyethylene insulated vinyl sheathed cable (∗)	CPEV	
■ Mesh insulated cable (∗)	MVVS	

∗ When the shield wire is used, be sure to ground the one side of the shield wire.

<Length of control wiring>

Between central remote controller and air-conditioner

Maximum extension : 1,000 m, Total length : 2,000 m (∗)

∗ When you have branches, be sure to make a total length of all the branch.

4.3.7 Instructions for Initial Setting

Group No. Setting for Central Control Equipment

Group No. should be set for each group by the remote controller for indoor unit, when you operate the system with central remote controller and unified ON/OFF controller. (For the same control group, set only one of the unit.)

■ **Remote controller for indoor unit**

■ Procedure to set the group No. for central control by remote controller for indoor unit.

1. When in the normal mode, press the " TEST " button for a minimum of four seconds, and the FIELD SET MODE is entered.
2. Select the desired MODE NO. with the " ▲▼ " button (②).
3. During group control, when setting by each indoor unit (mode No. 20, 22 and 23 have been selected), push the " ⊙-I ⊙-O " button (③) and select the INDOOR UNIT NO to be set. (This operation is unnecessary when setting by group.)
4. Push the " ▲ " upper button (④) and select FIRST CODE NO.
5. Push the " ▼ " lower button (⑤) and select the SECOND CODE NO.
6. Push the " ▭/∞ " button (⑥) once and the present settings are SET.
7. Push the " TEST " button (⑦) to return to the NORMAL MODE.

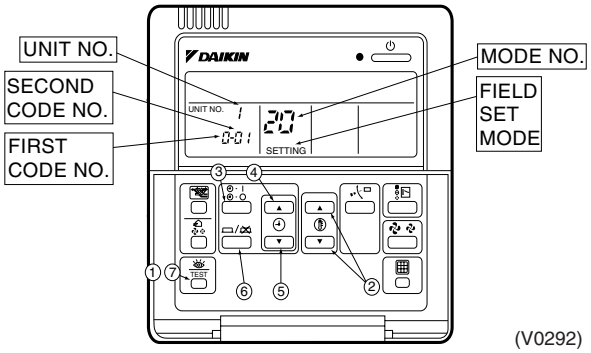

■ **Simplified remote controller**

■ Group No. setting by simplified remote controller.

1. Remove the cover of remote controller.
2. While in normal mode, press the [BS6] BUTTON (field set) to enter the FIELD SET MODE.
3. Select the mode No. [00] with [BS2] BUTTON (temperature setting ▲) and [BS3] BUTTON (temperature setting ▼).
4. Select the group No. with [BS9] BUTTON (set A) and [BS10] BUTTON (set B). (Group Nos. increase in the order of 1-00, 1-01.....1-15, 2-00,.....4-15. However, the unified ON/OFF controller displays only group No. set within the range of control.)
5. Press [BS7] BUTTON (set/cancel) to set group No.
6. Press [BS6] BUTTON (field set) to return to the NORMAL MODE.

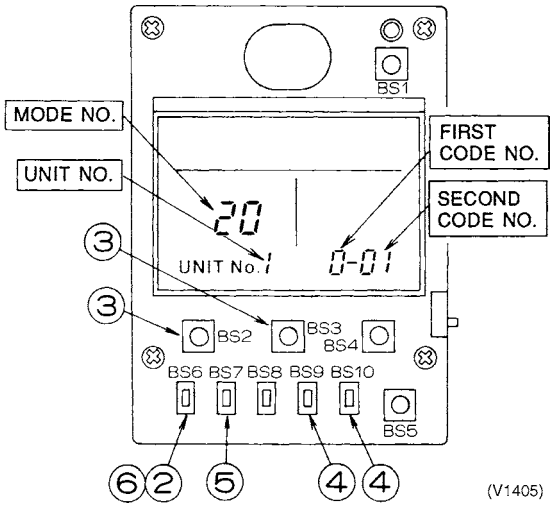

<Cautions>

■ Even in the system without remote control, connect the remote controller once to set group No. for central control equipment and remove the remote controller after setting.

■ When you set the group No., be sure to supply the power to the central remote controller, the unified ON/OFF controller and the indoor unit.

<Example of group setting>

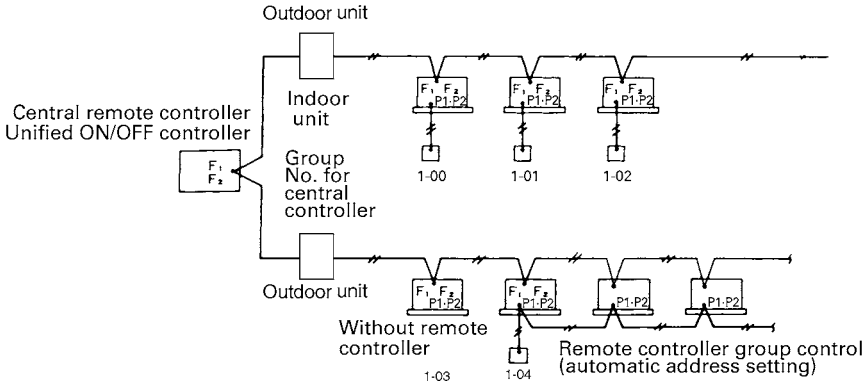

Cautions

When the power is supplied, all the display appears once on the remote controller and then the display changes to

14

[88] for about one minute and during that time the remote controller does not function. However, this is not a malfunction of remote controller.

Control Mode Setting by Remote Controller (Field Setting)

The control mode defines the function of local remote controllers to handle various types of control and applications. Function can be defined by conditions and combinations of local remote control operations such as ON/OFF etc. (See table below.)
Operation can always carried out from the central remote controller.(Except when connected to the central monitoring panel.)

■ Description of Control Mode

The following 5 operation control modes and 20 modes combined with temperature and operation mode setting by the remote controller are set and display by the control mode of 0 through 19.

Remote Control Rejection
For when you want to turn on/off using central remote controller only.
(On/off cannot be carried out by remote controller.)

Remote controller Off Only Accepted
For when you want to turn on only by the central remote controller, and turn off only by local remote controller.

Central Priority
For when you want to turn on only by the central remote controller, and during the set time, turn on/off freely by local remote controller.

Individual Priority (Last Command Priority)
For when you want to turn on/off by both central remote controller and local remote controller.

Remote Controller Permission Timer
For when you want to turn on/off by local remote controller during set time, but you do not want to start operation from the central remote controller at the programmed time of system start.

Note:
The control mode consists of numbers 0 through 19, but only 0 through 9 are usually set.

4.3.8 Selection of Control Mode No.

Select whether to accept or to reject the operation from the remote controller regarding the operation, stop, temperature setting and operation mode setting, respectively, and determine the particular control mode from the rightmost column of the table below.

(Example)

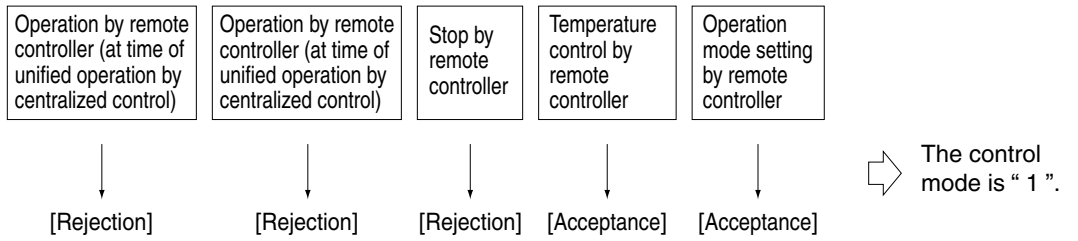

Operation mode	Control by remote controller					Control mode
	Operation		Stop	Temperature control	Operation mode setting	
	Unified operation, individual operation by central remote controller, or operation controlled by timer	Unified stop, individual stop by central remote controller, or timer stop				
ON/OFF control impossible by remote controller	Rejection (Example)	Rejection (Example)	Rejection (Example)	Rejection	Acceptance	0
					Rejection	10
				Acceptance (Example)	Acceptance (Example)	1 (Example)
					Rejection	11
Only OFF control possible by remote controller			Acceptance	Rejection	Acceptance	2
					Rejection	12
				Acceptance	Acceptance	3
					Rejection	13
Centralized	Acceptance			Rejection	Acceptance	4
					Rejection	14
				Acceptance	Acceptance	5
					Rejection	15
Individual		Acceptance		Rejection	Acceptance	6
					Rejection	16
				Acceptance	Acceptance	7
					Rejection	17
Timer operation possible by remote controller	Acceptance (During timer at ON position only)	Rejection (During timer at OFF position)		Rejection	Acceptance	8
					Rejection	18
				Acceptance	Acceptance	9
					Rejection	19

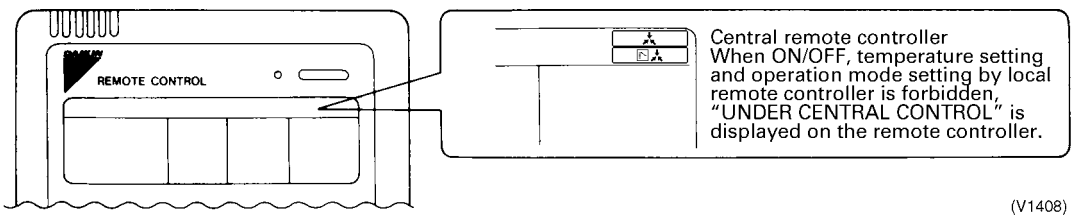

C : 3P171361-1

14

■ **Timing Chart for Each Control Mode No. (VRV system)**

Timing charts for scheduled operation and remote controller control for each control mode No. as follows.

1. Remote controller rejection (Code No. 0, 1, 10, 11)

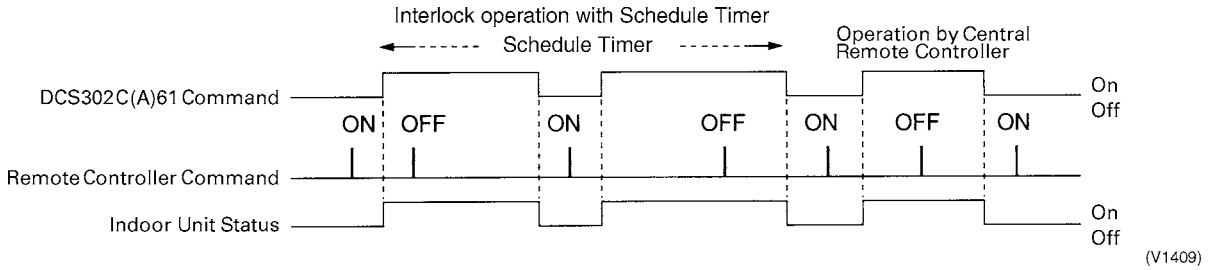

2. Remote controller off only accepted (Code No. 2, 3, 12, 13)

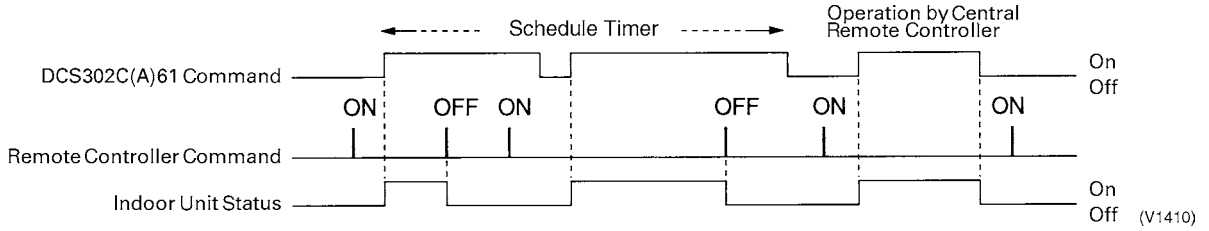

3. Central priority (Code No. 4, 5, 14, 15)

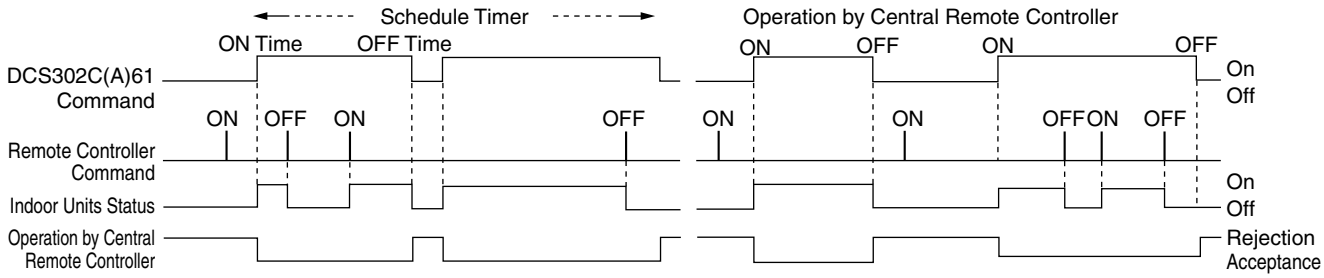

4. Individual priority (Last command priority) (Code No. 6, 7, 16, 17)

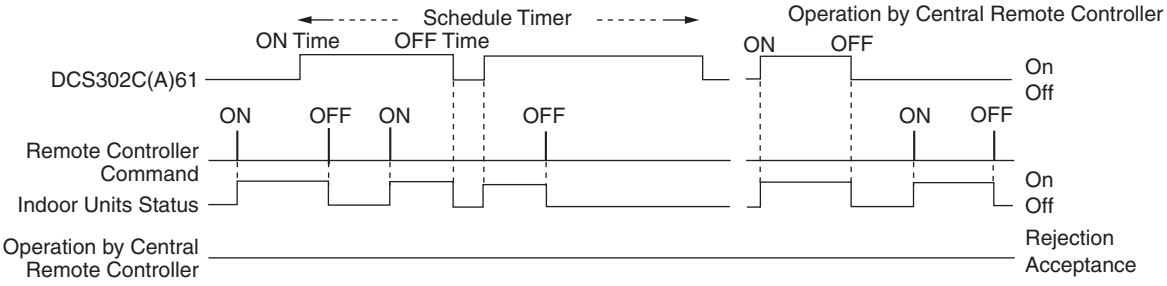

5. Remote controller permission timer (Code No. 8, 9, 18, 19)

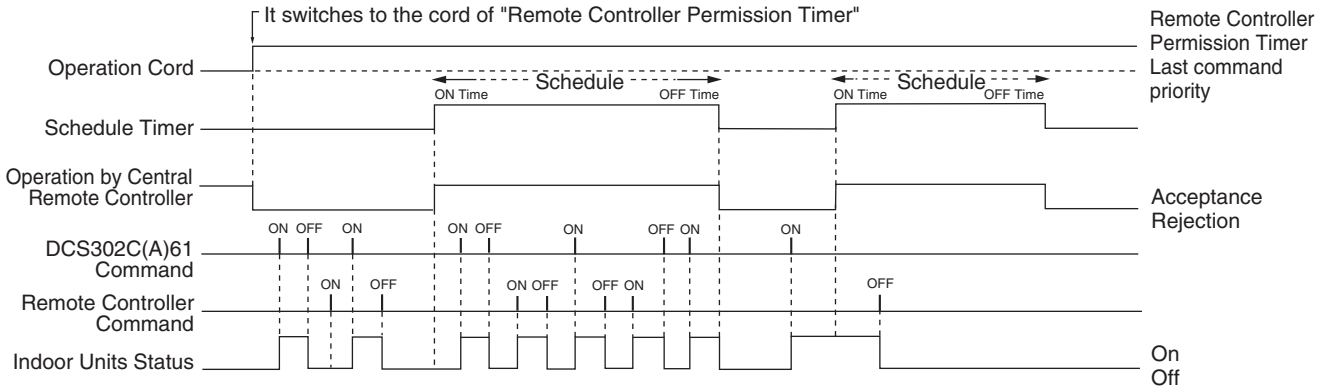

∗ Operation by remote controller is the same as central priority.

4.3.9 Initial Setting

Setting (1) through (3) are initialized when power is turned ON, therefore complete settings BEFORE activating the power.
(The positions of connectors and switches used for settings in this section are shown in Fig. 1.)

(1) Connector for setting master controller (X1A) (Provided with connector at factory set)

- When using only 1 central remote controller, do not disconnect the connector for setting master controller. (Use the unit with the connector in the state in which it was delivered.)
- When using multiple central remote controllers, or using the central remote controller in conjunction with the optional controllers for centralized control, makes settings as indicated in the below table.

Pattern of Connection of Optional Controllers for Centralized Control			Connector for Setting Master Controller (X 1A) Setting		
Central Remote Controller	Unified ON/OFF Controller	Schedule Timer	Central Remote Controller	Unified ON/OFF Controller	Schedule Timer
1 to 4	—	—	Set one to "Used" and all the rest to "Not used".	—	—
	1 to 16	—		Set all to "Not used".	—
		1			"Not used"
	—	1		—	"Not used"

(Remove this connector when using this controller in conjunction with power consumption counting unit, parallel interface, and data station.)

(2) Address setting

Two central remote controllers can be used as shown in "**SYSTEM CONFIGURATION**" to control anywhere up to a max. 128 groups of indoor units. In this case, group address must be set. This is done with the switch for setting each address (SS3).

Setting of SS3 switch	Control range of indoor units
Control range setting: 5-00 ~8-15 / 1-00 ~4-15	When controlling indoor units of Group No. 1-00~4-15

Setting of SS3 switch	Control range of indoor units
Control range setting: 5-00 ~8-15 / 1-00 ~4-15	When controlling indoor units of Group No. 5-00~8-15

(V1414)

(3) MAIN/SUB changeover switch setting

With two central remote controllers, centralized control (indoor units) is possible from different locations. In this kind of set-up, it is necessary to set the MAIN/SUB changeover switch.

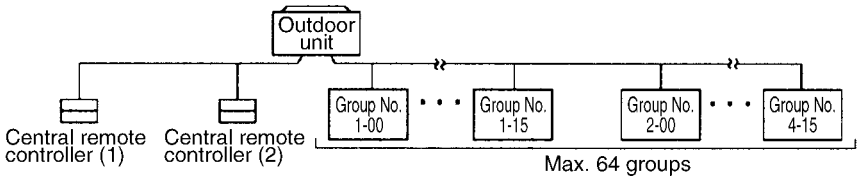

One of the two central remote controllers (1) · (2) is set to "MAIN" while the other is set to "SUB"

(4) Setting of the sequential operation function

The central remote controller is equipped with a sequential operation function that sequentially turns indoor units on in 2-second intervals during unified operation. (Sequential operation is factory set to "ON.") To switch sequential operation ON or OFF, set as follows.

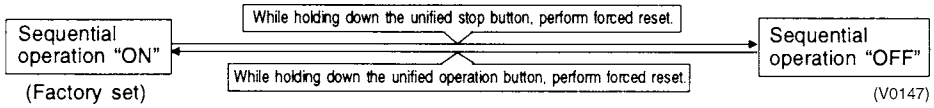

Note:
The sequential operation function is designed to reduce the load on the power supply equipment, but does not guarantee that compressors will not be started simultaneously. You cannot therefore count on a capacity reduction effect by power supply equipment breaker selection.

(5) Forced reset switch

When changing the setting of the connector for setting master controller, etc., you can reset simply by setting it to the reset side once and returning to the normal side, without turning the power OFF.
(For normal operation, set the switch to the normal side.)

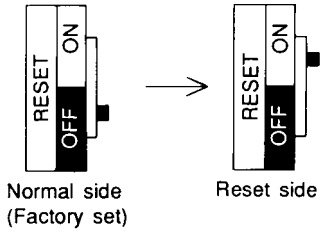

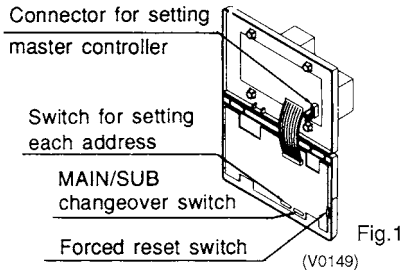

Fig.1

C: 2P162816

4.3.10 Electric Wiring

WIRING OUTLINE

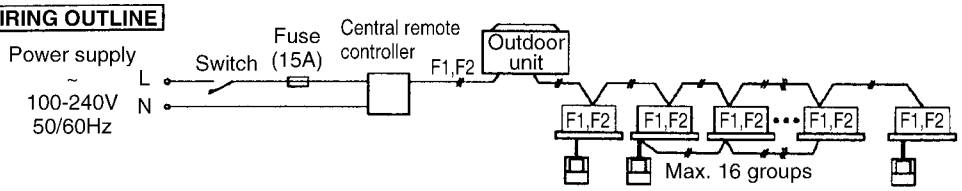

WIRING TO THE INDOOR UNIT AND OUTDOOR UNIT

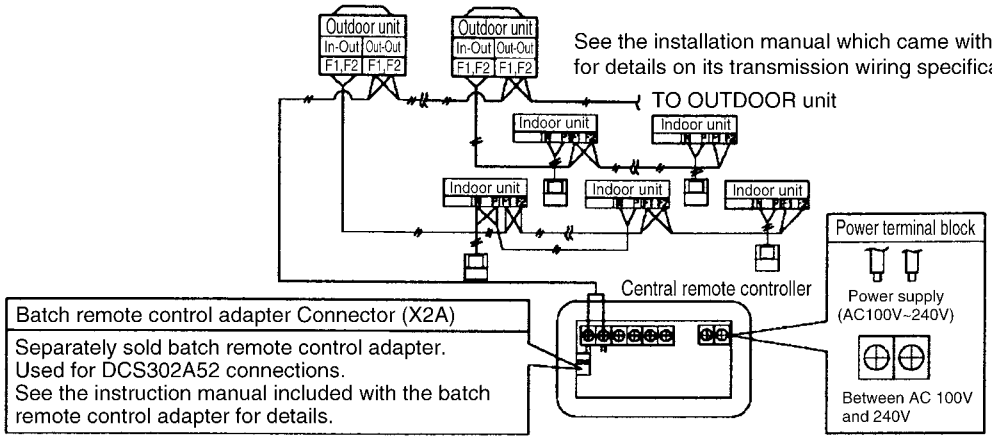

Wiring specifications

Power supply wiring	2mm²
Transmission wiring for control	0.75-1.25 mm² sheathed vinyl cord or cable (balanced type) - maximum length 1000 m (total overall wiring length 2000 m)

Wire the indoor units to the outdoor units and between all power, indoor units, and remote controllers. See the instruction manual included with the indoor and outdoor units for details.

CONTROL TERMINAL STRIP

*1 For connecting indoor unit (F1, F2)

*2 Forced OFF input (T1, T2)
None of the indoor units connected to the forced OFF input contact (non-voltage contact with minimal current) will operate when it is shut off.
Use only contactors which guarantee the minimum applicable load DC 16V, 10mA.

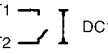

NOTE) Use instantaneous contactor of over 200m sec. energizing time, when necessary.

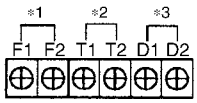

*3 For schedule timer (D1, D2)
Power can be supplied to the schedule timer (DST301BA51·61) separately sold. For details, refer to the installation manual of the schedule timer.

Wire *2 and *3 only when necessary.

Note:

Do not connect the power supply wiring (100 to 240V) to the control terminal strip. If connected by mistake, it may damage or burn electrical parts of optional controllers for centralized control and indoor unit. It may result in serious danger. Be sure to check wirings before turning the power ON.

C: 2P162816

4.3.11 Setting Group No. for Centralized Control

Set the group number of each group of the indoor unit from the remote controller. (In case of no remote controller, also connect the remote controller and set the group No. Then, remove the remote controller.)

1. Turn ON the power of the indoor unit and unified ON/OFF controller. (Unless the power is ON, no setting can be made.)
   Check that the installation and electrical wiring are correct before turning the power supply ON.
   When the power supply is turned ON, all LCD appear once and the unit may not accept the operation for about one minute with the display of " HOST " flashing (an interval of ON, ON, and OFF).
2. While in the normal mode, hold down the " TEST " button for a minimum of 4 seconds.
   The remote controller will enter the FIELD SET MODE.
3. Select the MODE No. " 00 " with the " ▲▼ " button.
4. Use the " ▲▼ " button to select the group No. for each group.
   (Group numbers increase in the order of 1-00, 1-01, ...1-15, 2-00, ... 8-15.)
5. Press " ▭ " to set the selected group No.
6. Press " TEST " to return to the NORMAL MODE.

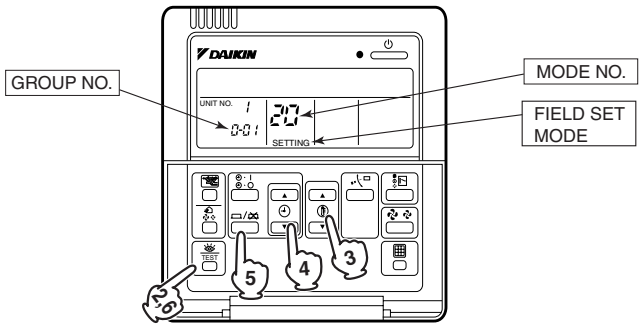

Note:

- For simplified remote controller, see the installation table.

NOTICE

Enter the group No. and installation place of the indoor unit into the attached installation table. Be sure to keep the installation table with the operation manual for maintenance.

4.3.12 Special Function Settings

Special functions on the central control system can be changed while in FIELD SETTING mode.

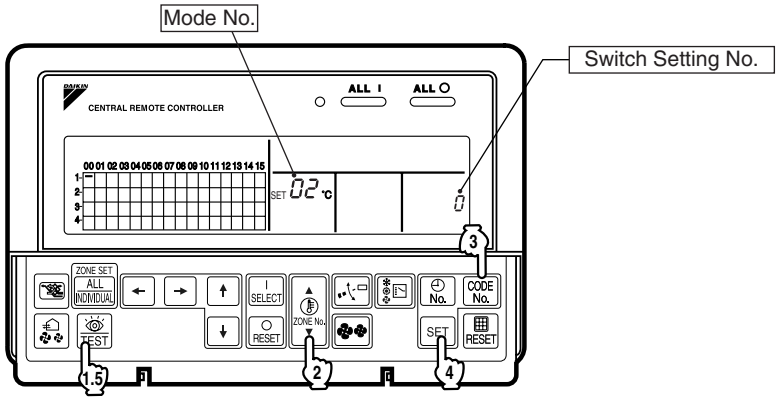

Setting Procedure

1. Press and hold the INSPECTION/TEST RUN button for a period of four seconds or more to set the system to FIELD SETTING mode.
2. Use the TEMPERATURE ADJUSTMENT button to select a desired Mode No.
   ▲ : Press to increase the Mode No. ▼ : Press to decrease the Mode No.
3. Press the CONTROL MODE (CODE No.) button to select a "Switch Setting No.".
4. Press the SET button to determine the content of the setting changed.
   Upon determination, the blinking the "Switch Setting No." will turn ON.
5. Press the INSPECTION/TEST RUN button to return the system to NORMAL mode.
   In this case, power supply is not needed to turn ON again.

Example: In case of no restriction items from the sub central remote controller while in double central control, make setting of the Mode No. to "02" and the Switch Setting No. to "0".

Setting Contents and Setting No.

Mode No.	Setting contents	No. of setting switch									
		0				1		2			
00	Setting of sequential operation function	NO				YES		–			
01	Setting of refresh function	NO				YES		–			
02	Setting of restriction items from sub central remote controller while in double central control function	Disabled				Enabled		–			
03	Setting of area designation for forced OFF (Operation with T1 and T2 entered)	Forced OFF all within the scope of control				Forced OFF only within the scope of control		Forced thermostat OFF with the scope of control			
04	LED contrast tuning	1	2	3	4	5	6	7	8	9	10
		← Low				Factory default		→ High			

Items indicated by boldface represent the factory set for the No. of Switch Setting.
Do not make setting of any items not listed in the table above.

■ **Refresh function**

This function is used to automatically send "OPERATION MODE" and "TEMPERATURE SETTING" from the central control system while in operation. In order to disable the refresh function, set the "No. of Switch Setting" to "0".

■ **Restriction items from sub central remote controller while in double central control function**

While in double central control function, no settings of zone interlock and operation code can be made from the sub central remote controller. In order to disable the refresh function from the sub central remote controller, set the "No. of Switch Setting" to "0".

■ **Setting of area designation for forced OFF**

- In order to stop all indoor units within the scope of control as a single unit using the entry of T1 and T2, set the "No. of Switch Setting" to "1".
- In order to stop all indoor units within the scope of control with forced thermostat OFF using the entry of T1 and T2, set the "No. of Switch Setting" to "2". With this parameter set to "2", no forced stop can be made on any indoor unit.

4.3.13 Refreshed Operation

Refreshed operation is the function to transmit setting of "Temperature control", "Temperature setting" automatically from DCS302CA61.

"Refreshed operation" is "ON" when shipped from the factory.

Factory Setting

Outdoor Units Systems	Indoor Units Mode
Cooling Mode	Cooling 28 °C
Heating Mode	Heating 22 °C
Fan Mode	Fan Operation

It depends on the setting of outdoor systems that an indoor unit setting is "Temperature control" or "Temperature setting"

■ **In case of Refreshed operation is "ON"**

- When setting is changed by DCS302CA61, it operates by this setting from the next operation.
  If it sets up with 26 °C in cooling by DCS302CA61, "in the case of the equipment which has not carried out zone setting by a central remote controller, it operates from next with the mode of operation and preset temperature which were set up on the individual screen."
  In the case of the equipment which carried out zone setting, it operates from next with the mode of operation and preset temperature which were set up on the zone screen.
  (Priority is given over the mode of operation and preset temperature which were set up on the zone setting screen).
  When it sets up all at once, it operates from next with the mode of operation and preset temperature which were set up last time on the individual screen (Equipment which has not carried out zone registration), or the zone screen.
  If a setting change is made with 26 °C of cooling by a central remote controller on an individual screen (Equipment which has not carried out zone setting)" next operation will also be operated at 26 °C in cooling. (Even if it has changed into heating operation, fan only operation with wired or wireless remote control, it operates at 26 °C in cooling.)

• When zone registration is carried out by Central Remote Controller.
It operates from next time with the value set up in the zone.
When a zone 1 is set up with 20 °C of heating. (Refer to the system of the following figure.)
When controlled by Central Remote Controller, 3 indoor units registered into the zone 1 are operated by 20 °C of heating. Because priority is given to zone setting, even if it sets up 2-02 with 25 °C of heating on an individual screen from Central Remote Controller, 2-02 is operated at 20 °C.

• When there are two or more indoor units in a zone.
Because an operating mode depends on the outdoor unit, the operating mode of each indoor unit does not become the same setting.
When the outdoor unit system 1 is cooling, the outdoor unit system 2 is heating and it operates by the system of the following figure. Setting of a zone 2 is operated in heating mode, because 2-03, 2-04, and 2-05 do not have a cooling/heating selection right as for 26 °C of cooling, but temperature setting becomes 26 °C.
When you unify the operating mode of an indoor unit in the same zone, please set up a zone in the indoor unit of the same outdoor unit system.

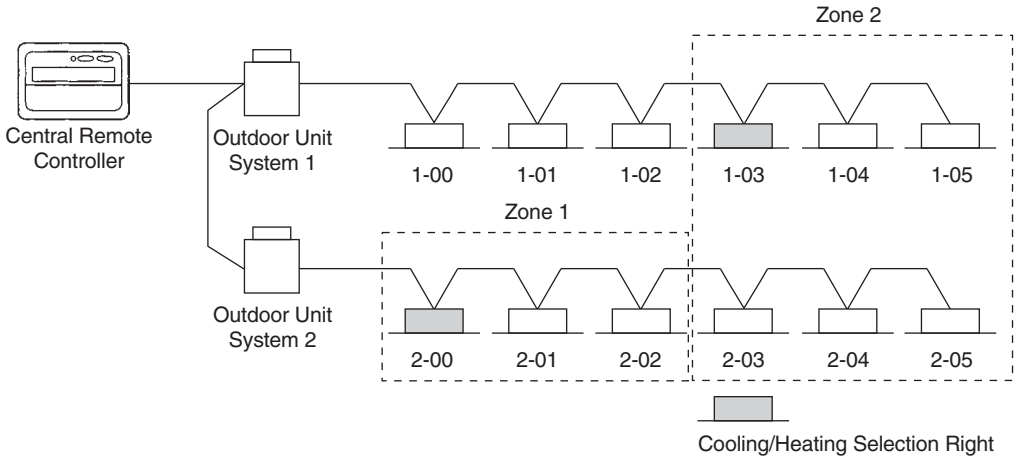

Installation

(1) Open the upper part of remote controller.
Insert a ⊖ screwdriver (2 locations) into the recess between the upper part and the lower part of remote controller and twist the screwdriver lightly.

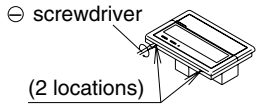

PC board is attached with both the upper and lower part of remote controller. Do not damage the board with the screwdriver.

(2) Open the upper part of remote controller and install the Electric parts box with the attached installation screws (M4 × 16).

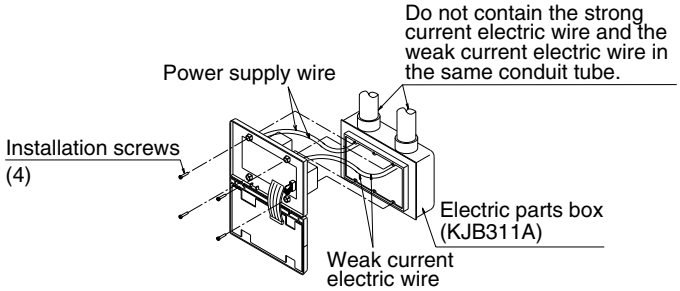

NOTE) Suitable length of the electric wire is about 160mm. (from electric parts box) If it is difficult to contain a long wiring, strip the sheathed part of the wiring.

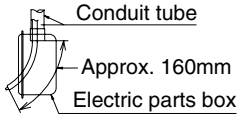

C: 2P162816

4.3.14 Error diagnosing function

This central remote controller is provided with a diagnosing function, for when an indoor unit stops due to malfunction. In case of actuation of a safety device, disconnection in transmission wiring for control or failure of some parts, the operation lamp, inspection display and unit No. start to flash; then, the malfunction code is displayed. Check the contents of the display, and contact your DAIKIN dealer because the above signs can give you the idea on the trouble area.

The display "▬" flashes under the group No. where the indoor unit that has stopped due to malfunction.

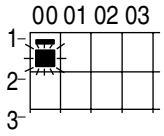

[Registration]

1. ☞① **Press the ARROW KEY BUTTON to call up the group that has stopped due to malfunction.**

   ☞② The unit No. ☞③ the malfunction code is flashing because of an error failure.

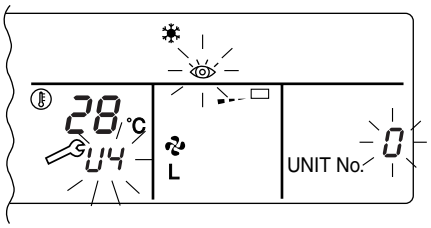

Operation lamp	Maintenance display	Unit No.	Malfunction code	Error content
☼	●	◑	**64**	Indoor air thermistor error
☼	●	◑	**65**	Outdoor air thermistor error
☼	●	◑	**68**	HVU error (Ventiair dust-collecting unit)
☼	●	◑	**6A**	Dumper system error
◑	◑	◑	6A	Dumper system error + Thermistor error
☼	●	◑	**6F**	Simple remote controller error
☼	●	◑	**6H**	Door switch (Ventiair dust-collecting unit), relay harness fault (Ventiair dust-collecting/humidifier unit)
◑	◑	◑	94	Ventiair internal transmission error (between total enthalpy – fan unit)
◑	◑	◑	A0	Indoor unit · external safety device error
◑	◑	◑	A1	Indoor unit · BEV unit (Sky-Air connection unit) PC board assembly fault
☼	●	◑	**A1**	Indoor unit · PC board assembly fault
◑	◑	◑	A3	Indoor unit · Drain level error (33H)
◑	◑	◑	A6	Indoor unit · Fan motor (51F) lock, overload
☼	●	◑	**A7**	Indoor unit · Fan direction adjustment motor (MA) error
◑	◑	◑	A9	Indoor unit · BEV unit, electric expansion valve motor (20E) error
☼	●	◑	**AF**	Indoor unit · Malfunctioning drain
☼	●	◑	**AH**	Indoor unit · Dust-collector error
◑	◑	◑	AJ	Indoor unit · Insufficient capacity setting, address setting fault

3P124623-3A

Operation lamp	Maintenance display	Unit No.	Malfunction code	Error content
◑	◑	◑	C4	Indoor unit · Liquid piping thermistor (Th2) Error (faulty connection, cut wire, short circuit, fault)
◑	◑	◑	C5	Indoor unit · BEV unit, gas piping thermistor (Th3) Error (faulty connection, cut wire, short circuit, fault)
◑	◑	◑	C9	Indoor unit · Intake air thermistor (Th1) Error (faulty connection, cut wire, short circuit, fault)
◑	◑	◑	CA	Indoor unit · Outlet air thermistor (Th4) Error (faulty connection, cut wire, short circuit, fault)
☼	●	☼	**CJ**	Indoor unit · remote controller sensor error
◑	◑	◑	E0	Outdoor unit · Safety device operation
◑	◑	◑	E1	Outdoor unit · PC board assembly fault
☼	●	◑	**E1**	Outdoor unit · PC board assembly fault
◑	◑	◑	E3	Outdoor unit · High-pressure switch fault
◑	◑	◑	E4	Outdoor unit · Low-pressure switch fault
◑	◑	◑	E9	Outdoor unit · Electric expansion valve motor (20E) error
☼	●	◑	**EC**	Heat source unit · Intake water temperature inter-lock operation (fan operation)
◑	◑	◑	EF	Outdoor unit · Ice thermal storage unit error
◑	◑	◑	F3	Outdoor unit · Discharge piping temperature error
☼	●	◑	**H3**	Outdoor unit · High-pressure switch operation
◑	◑	◑	H4	Outdoor unit · Low-pressure switch operation
◑	◑	◑	H9	Outdoor unit · Outdoor air thermistor (Th1) Error (faulty connection, cut wire, short circuit, fault)
☼	●	◑	**H9**	Outdoor unit · Outdoor air thermistor (Th1) Error (faulty connection, cut wire, short circuit, fault)
☼	●	◑	**HC**	Outdoor unit · Water temperature sensor system error
☼	●	◑	**HF**	Ice thermal storage unit error, ice thermal storage controller error, error in outdoor unit during ice thermal storage operation
◑	◑	◑	HJ	Outdoor unit · water system fault
◑	◑	◑	J1	Outdoor unit · pressure sensor error
◑	◑	◑	J3	Outdoor unit · Discharge piping thermistor (Th3) Error (faulty connection, cut wire, short circuit, fault)
☼	●	◑	**J3**	Outdoor unit · Discharge piping thermistor (Th3) Error (faulty connection, cut wire, short circuit, fault)
◑	◑	◑	J5	Outdoor unit · Intake piping thermistor (Th4) Error (faulty connection, cut wire, short circuit, fault)
◑	◑	◑	J6	Outdoor unit · Heat exchange thermistor (Th2) error
☼	●	◑	**J6**	Outdoor unit · Heat exchange thermistor (Th2) error Error (faulty connection, cut wire, short circuit, fault)
◑	◑	◑	J7	Outdoor unit · Header thermistor (Th6) error
◑	◑	◑	JA	Outdoor unit · Discharge piping pressure sensor error
◑	◑	◑	JC	Outdoor unit · Intake piping pressure sensor error
◑	◑	◑	JF	Outdoor unit · Oil temperature sensor (Th5) system error
☼	●	◑	**JH**	Outdoor unit · Oil temperature sensor (Th5) system error
◑	◑	◑	L0	Outdoor unit · Inverter system fault
◑	◑	◑	L4	Outdoor unit · Inverter cooler fault
◑	◑	◑	L5	Outdoor unit · Ground circuit for compressor motor, short circuit, or power unit short circuit

3P124623-3A

14

Operation lamp	Maintenance display	Unit No.	Malfunction code	Error content
◑	◑	◑	L6	Outdoor unit · Ground circuit for compressor motor, short circuit
☼	◑	◑	L8	Outdoor unit · Compressor overload, compressor motor wire disconnection
◑	◑	◑	L9	Outdoor unit · Compressor lock
◑	◑	◑	LA	Outdoor unit · Power unit error
◑	◑	◑	LC	Outdoor unit · Transmission error between inverter and outdoor control unit
☼ or ●	◑	◑	M1	Central controller: PC board fault
☼ or ●	◑	◑	M8	Transmission error between central controllers
☼ or ●	◑	◑	MA	Central controller: Incorrect combination
☼ or ●	◑	◑	MC	Central controller: Address setting fault
◑	●	◑	**P0**	Insufficient gas (thermal storage)
◑	◑	◑	P1	Outdoor unit · Power voltage imbalance, phase loss
◑	◑	◑	P4	Outdoor unit · Power unit temperature sensor error
☼	●	◑	**U0**	Pressure drop due to insufficient refrigerant, electric expansion valve fault, etc.
◑	◑	◑	U1	Reversed or lost phase
◑	◑	◑	U2	Power voltage error, momentary electrical stoppage
◑	◑	◑	U4	Transmission error between indoor unit/BEV unit and outdoor/BS unit, Transmission error between outdoor unit and BS unit
◑	◑	◑	U5	Transmission error between remote controller and indoor control unit
●	☼	●	U5	Remote controller board fault or remote controller setting fault
◑	◑	◑	U6	Transmission error between indoor units
◑	◑	◑	U7	Transmission error between outdoor units Transmission error between outdoor unit and ice thermal storage unit
☼	●	◑	**U7**	Transmission error between outdoor units (cooling/heating batch, low-noise operation)
◑	◑	●	U8	Transmission error between master remote controller and slave remote controller (slave remote controller error) Incorrect combination of indoor unit and remote controller within a single system (model)
◑	◑	◑	U9	Transmission error between indoor unit/BEV unit and outdoor unit within a single system Transmission error between BS unit and indoor unit/BEV unit and outdoor unit within a single system
◑	◑	◑	UA	Incorrect combination of indoor, BS, and outdoor units within a single system (model, number of units, etc.) Incorrect combination of indoor unit and remote controller (remote controller in question) BS unit connection position fault
☼	●	☼	**UC**	Central control group numbers overlap
◑	◑	◑	UE	Transmission error between indoor unit and central controller
◑	◑	◑	UF	Unset system, incorrect settings between BEV unit and indoor unit
◑	◑	◑	UH	System fault

▬ error codes (in outline font) do not display “maintenance” and the system will run, but please check the content of the display and contact your dealer.

3P124623-3A

4.4 <DCS301BA61> Unified ON/OFF Controller

Turns up to 16 groups of indoor units (max. 128 units) on/off (operation/stop) by individual group or all at once, and lets you check display of operation/malfunction at the same time.

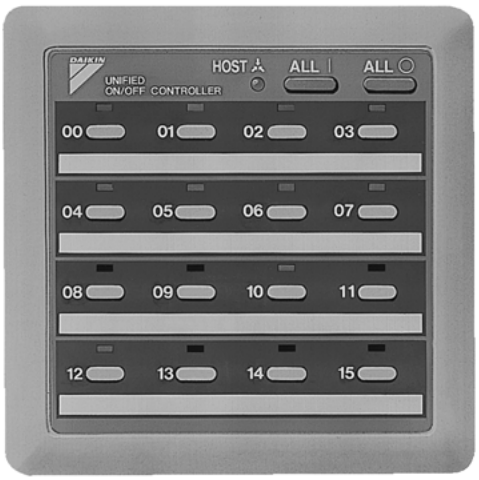

- For a maximum of 16 groups of indoor units (max. 128 units), unified operation/stop or individual operation/stop can be performed with this optional accessory. Also allows you check operation/error display at a glance.
- By combining with a central remote controller and schedule timer, you can construct a system that matches the size and use of the building.
- Up to 8 units connectable within 1 system.
  Up to 16 units in the double central control mode.
- Features thin design of a mere 16mm in thickness. (Uses JIS recessed box for 2.)
- Wiring can be up to 1km in length. Applicable wiring methods include bus and star in addition to crossover type.
- Can be used in combination with other D-BACS equipment.

4.4.1 System Configuration

This unified ON/OFF controller enables individual and unified operation/stop for a maximum of 16 groups of indoor units. With 2 to 8 unified ON/OFF controllers, individual and unified control is possible with up to a maximum 128 groups of indoor units.

- When using 1 unified ON/OFF controller

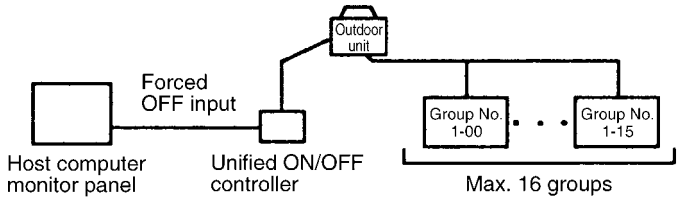

- When using 2 to 8 unified ON/OFF controllers

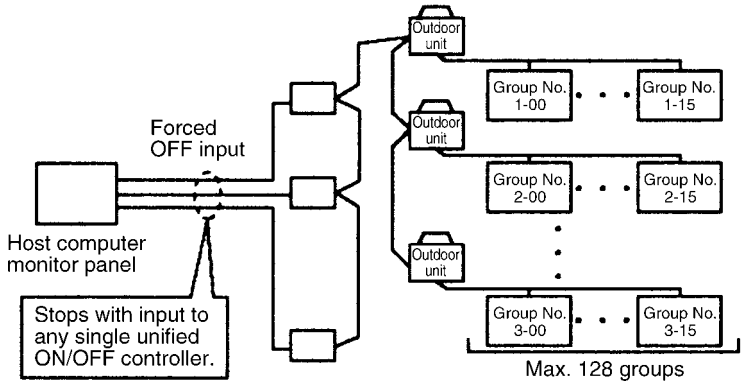

(This optional accessory can not be used in conjunction with wiring adaptor for electrical appendices (optional accessory).)

The groups of indoor units are as follows:

1. One indoor unit without remote controller



Without remote controller (V0158)

14

2. One indoor unit controlled by one or two remote controllers

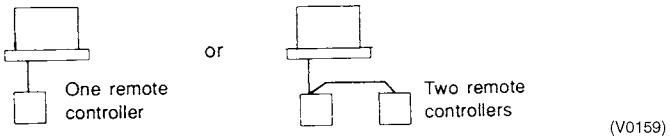

3. A maximum of 16 indoor units controlled in groups by one or two remote controllers

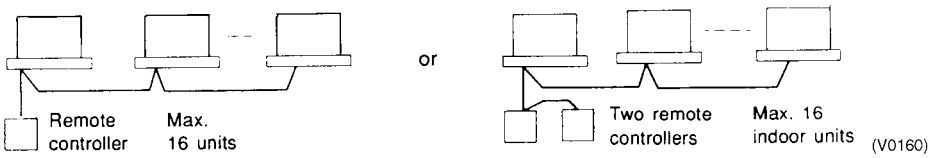

C: 1P162827

4.4.2 Electric Wiring

General Instructions

- All wiring, components and materials to be procured on the site must comply with the applicable local and national codes.
- Use copper conductors only.
- All field wiring and components must be provided by licensed electrician.
- Unit shall be grounded in compliance with the applicable local and national codes.
- Fit the power supply wiring with a fuse and a switch.
- After wiring work, check power to the equipment shuts OFF when switch is shut OFF.

Wiring Outline

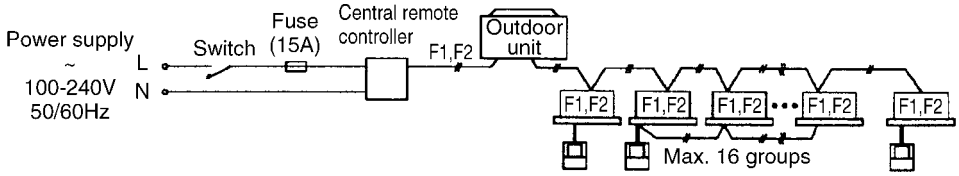

Wiring Specification

	Type	Size
Power Supply Wiring	H05VV-U3G	(Note 1)
Transmission Wiring	Sheathed Wire (2 wire) (Note 2)	0.75-1.25mm^2

Notes:

1. The size of power supply wiring must comply with the applicable national and local codes.
2. Allowable length of transmission wiring is as follows.
   Max. 1000m (Total wiring length: 2000m)

Connect the wiring between indoor and outdoor units, indoor/outdoor units and power supply, and indoor units and remote controllers.
For details, refer to the installation manuals of indoor and outdoor units.

Examples of Wiring for Transmission

1. Series Wiring

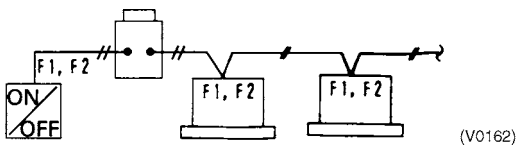

2. **Bus Type Wiring** (Can be branched up to 16 branches)
   Example of 3 branches

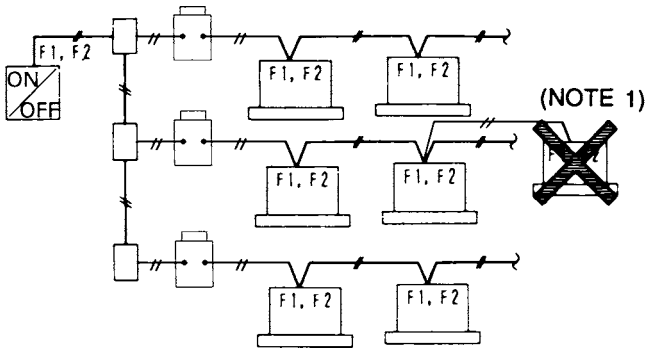

(V0163)

3. **Star Type Wiring** (Can be branched up to 16 branches)
   Example of 3 branches

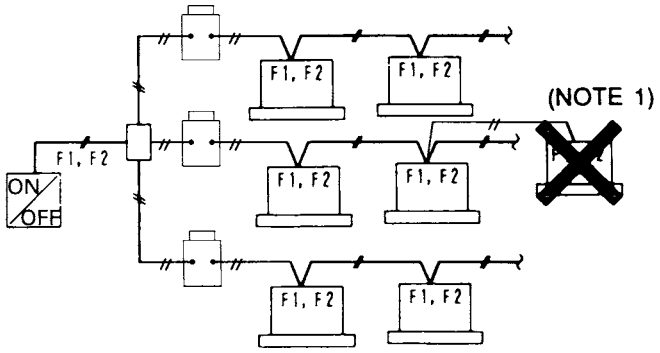

(V0164)

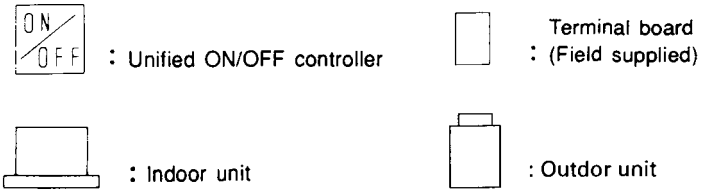

(V0165)

Note:
1. No branching is allowed after branching.
2. Use a relay terminal board (field supplied) to branch more than 3 control wires from the same terminal board.

14

Wiring to the Indoor Unit and Outdoor Unit

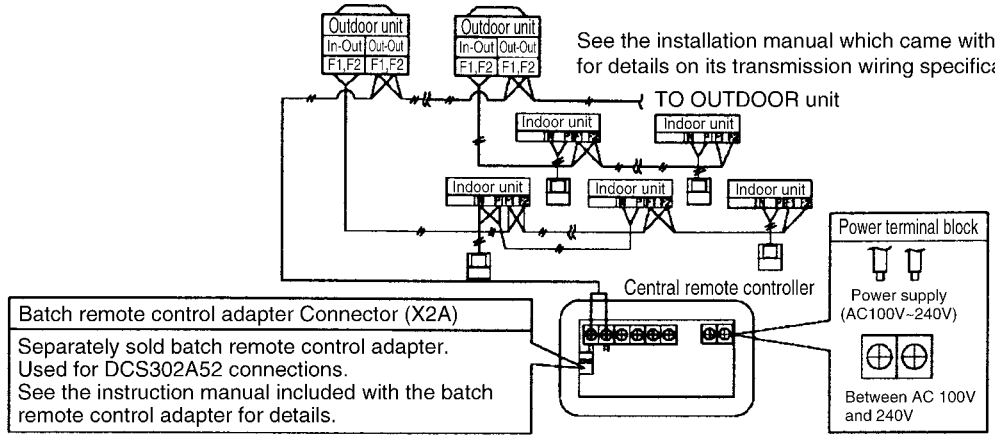

Wiring specifications

Power supply wiring	2mm^2
Transmission wiring for control	0.75-1.25 mm^2 sheathed vinyl cord or cable (balanced type) - maximum length 1000 m (total overall wiring length 2000 m)

Wire the indoor units to the outdoor units and between all power, indoor units, and remote controllers. See the instruction manual included with the indoor and outdoor units for details.

CONTROL TERMINAL STRIP

*1 For connecting indoor unit (F1, F2)

*2 Forced OFF input (T1, T2)
None of the indoor units connected to the forced OFF input contact (non-voltage contact with minimal current) will operate when it is shut off.
Use only contactors which guarantee the minimum applicable load DC 16V, 10mA.

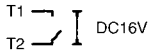

NOTE) Use instantaneous contactor of over 200m sec. energizing time, when necessary.

*3 For schedule timer (D1, D2)
Power can be supplied to the schedule timer (DST301BA51·61) separately sold. For details, refer to the installation manual of the schedule timer.

Wire *2 and *3 only when necessary.

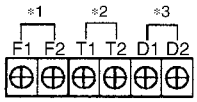

Note:

Do not connect the power supply wiring (100 to 240V) to the control terminal strip. If connected by mistake, it may damage or burn electrical parts of optional controllers for centralized control and indoor unit. It may result in serious danger. Be sure to check wirings before turning the power ON.

C: 1P162827

4.4.3 Dimension

Unified ON/OFF Controller

■ **DCS301B(A)61**

Unit (mm)

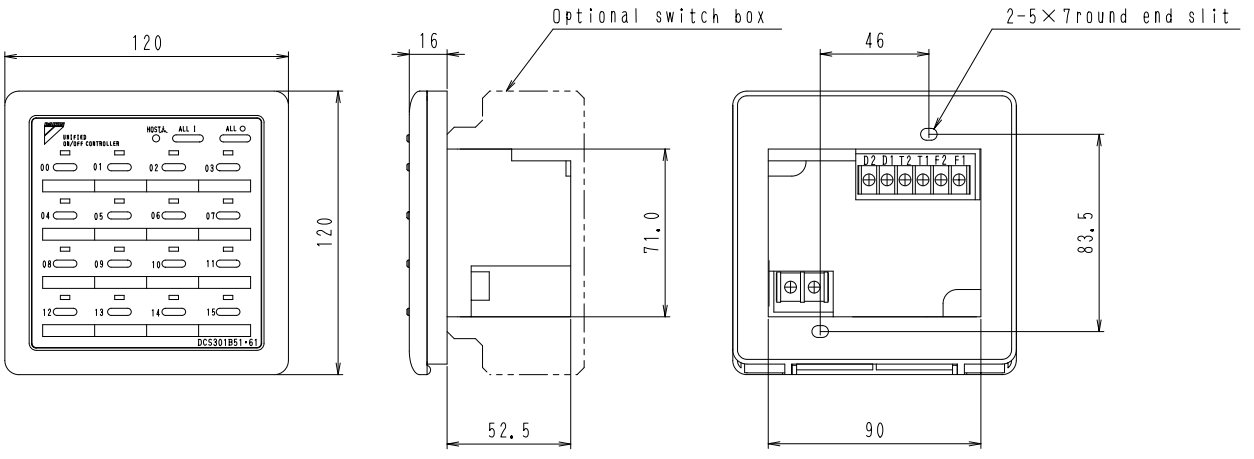

3D050339

4.4.4 Installation

1. Open the upper part of remote controller.
   Insert a minus screwdriver (2 locations) into the recess between the upper part and the lower part of remote controller and twist the screwdriver lightly.

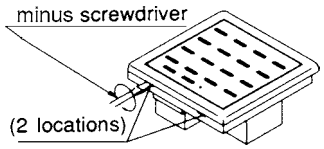

PC board is attached with both the upper and lower part of remote controller. Do not damage the board with the screwdriver.

2. Open the upper part of remote controller and install the electrical box (part to be procured in the field) with the attached installation screws (M4×16).

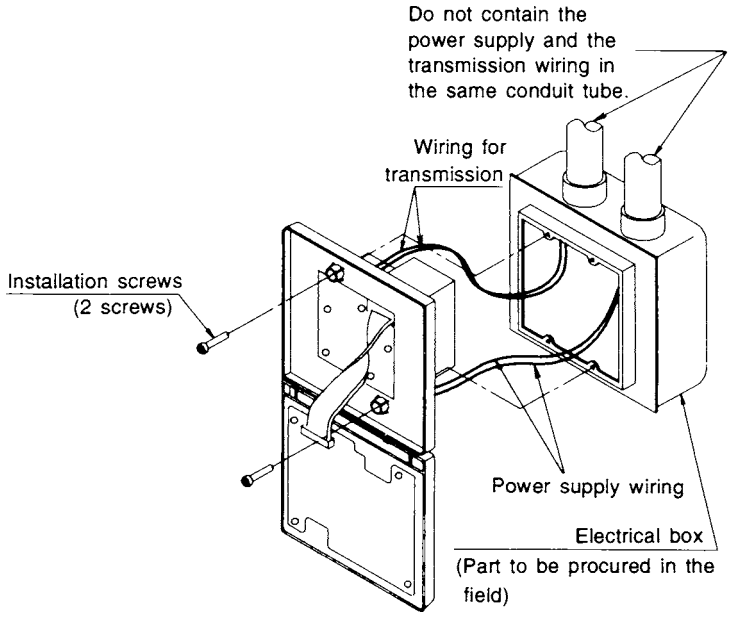

Note:
Suitable length of the electric wire is about 160mm from the inlet of the electrical box. If it is difficult to contain a long wiring, strip the sheathed part of the wiring.

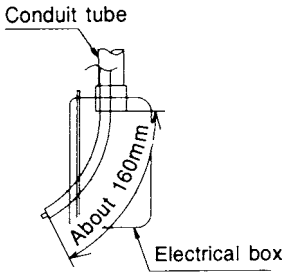

(V0168)

C: 1P162827

14

4.4.5 Initial Setting

Setting 1. through 3. are initialized when power is turned ON, therefore complete settings before activating the power.

1. Connector for setting master controller (X1A) (Provided with connector at factory set)

- When using 1 unified ON/OFF controller, do not disconnect the connector for setting master controller. (Use the unit with the connector in the state in which it was delivered.)
- When using multiple unified ON/OFF controllers, or using the unified ON/OFF controller in conjunction with other optional controllers for centralized control, makes settings as indicated in the right table.

Pattern of connection of optional controllers for centralized control			Connector for setting master controller (X1A) Settings		
Unified ON/OFF Controller	Central Remote Controller	Schedule Timer	Unified ON/OFF Controller	Central Remote Controller	Schedule Timer
1 to 16	—	—	Set one to “Used” and all the rest to “Not used”.	—	—
	1 to 4	—	Set all to “Not used”.	(Note)	—
	—	1	Set one to “Used” and all the rest to “Not used”.	—	“Not used”
	1 to 4	1	Set all to “Not used”.	(Note)	“Not used”

Note:

For instructions on how to set the connector for setting master controller on the central remote controller, see the installation manual provided with the central remote controller.

2. Switch for Setting Each Address (DS1)

These switches are used to set group control address.

Groups Nos. 1-00 through 1-15 are grouped in the same control group when the unit is shipped from the factory.

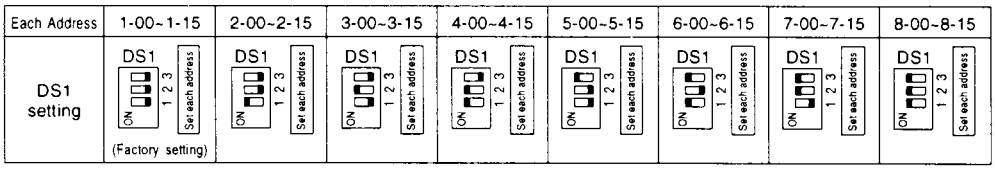

(V0170)

After setting, attach the number seal applicable to respective control range of the attached switch display sticker, as shown in the diagram below.

(Example)

In The Case of 1-00 to 1-15, Attach 1.

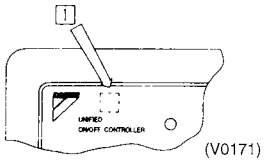

(V0171)

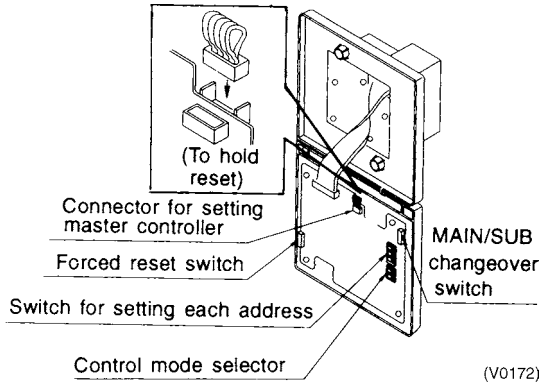

(V0172)

3. MAIN/SUB Changeover Switch Setting

With two unified ON/OFF controllers, centralized control (indoor units) is possible from different locations. In this kind of set-up, it is necessary to set the MAIN/SUB changeover switch.

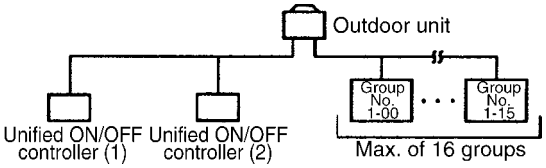

One of the two unified ON/OFF controllers (1) · (2) is set to “MAIN” while the other is set to “SUB”.

4. Setting of the Sequential Operation Function

The unified ON/OFF controller is equipped with a sequential operation function that sequentially turns indoor units on in 2-second intervals during unified operation. (Sequential operation is factory set to “ON.”) To switch sequential operation ON or OFF, set as follows.

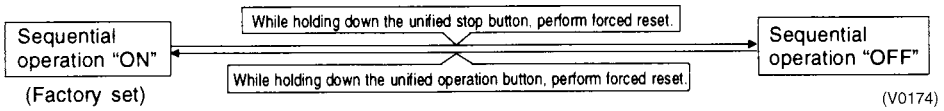

Note:

The sequential operation function is designed to reduce the load on the power supply equipment, but does not guarantee that compressors will not be started simultaneously. You cannot therefore count on a capacity reduction effect by power supply equipment breaker selection.

5. Control Mode Selector (DS2)

The following four patterns of control mode can be set.

Control Mode	Individual	Centralized	Timer Operation Possible by Remote Controller	ON/OFF Control Impossible by Remote Controller
Content	Operation/stop is controlled by both unified ON/OFF controller and remote controller.	After operated by unified ON/OFF controller, operation/stop is freely controlled by remote controller until stopped by unified ON/OFF controller.	When used in conjunction with schedule timer, operation/stop is controlled freely by remote controller during the set time but operation is not available when schedule timer is ON.	Operation/stop is controlled by unified ON/OFF controller only. (This unit can not be operated/stopped by remote controller.)
DS2 Setting	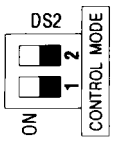 (V0175) (Factory set)	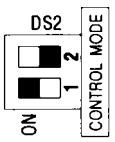 (V0176)	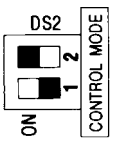 (V0177)	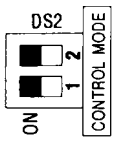 (V0178)

Note:

- “■” Indicates the position of switches.
- Set control mode before turning power supply ON.
- When used in conjunction with central remote controller, the control modes of the central remote controller has the priority.

6. Forced Reset Switch (SS1)

When changing the setting of the connector for setting master controller, etc., you can reset simply by setting it to the reset side once and returning to the normal side, without turning the power OFF.
(For normal operation, set the switch to the normal side.)

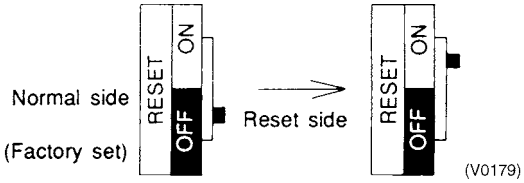

C: 1P162827

14

4.4.6 Setting Group No. for Centralized Control

In order to conduct the central remote control using the central remote controller and the unified ON/OFF controller, Group No. settings should be made by group using the operating remote controller.
Make Group No. settings for central remote control using the operating remote controller.

1. While in normal mode, press and hold the TEST switch for a period of four seconds or more to set the system to "Field Setting Mode"."
2. Select the MODE No. "00" with the " " button.
3. Use the " " button to select the group No. for each group.
   (Group numbers increase in the order of 1-00, 1-01, ... 1-15, 2-00, ... 4-15.)
4. Press " " to set the selected group No.
5. Press " " to return to the NORMAL MODE.

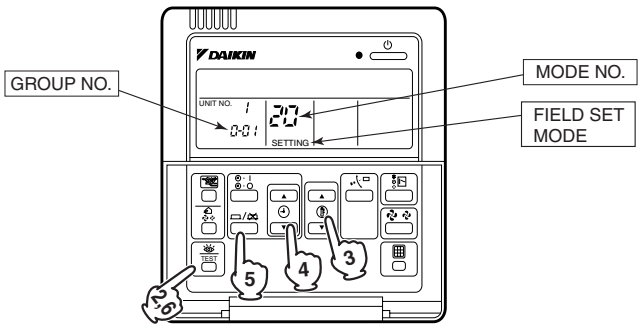

Note:

- For simplified remote controller, see the installation table.

NOTICE

Enter the group No. and installation place of the indoor unit into the attached installation table. Be sure to keep the installation table with the operation manual for maintenance.

4.4.7 Confirming Operation

Before starting test operation, supply power to the indoor units, outdoor units, and unified ON/OFF controller and press the ON/OFF button. If the operation lamp flashes, it indicates a malfunction in the indoor unit of the applicable group.
If the display of "HOST" flashes, it indicates a malfunction in the optional controllers for centralized control. Check for such malfunctions.

Notes:

- For test operation of indoor and outdoor units, refer to the installation manual attached with the outdoor unit.
- After turning the power supply ON, if the unit does not accept operation for two minutes or more with the display of "HOST" flashing, check the following points.
- Check that setting of the connector for setting master controller is correct.
- Check that the group No. for centralized control has been set.

1P162827

4.5 <DST301BA61> Schedule Timer

Enables you to connect and control weekly schedule for up to 128 indoor units all together.



- Simultaneous control of up to 128 indoor units is managed by a week schedule.
- The start and stop time for twice a day can be set for the week in increments of 1 minute.
- By combining with a central remote controller and schedule timer, you can construct a system that matches the size and use of the building.
- If used together with a central remote controller, you can set up to 8 schedule patterns which can be distributed among zones as desired using the central remote controller.
- Is equipped with a compensation function for power failure up to 48 hours.
- Features thin design of a mere 16 mm in thickness. (Uses JIS recessed box for 2.)
- Wiring can be up to 1 km in length. Applicable wiring methods include bus and star in addition to crossover type.
- Can be used in combination with other D-BACS equipment.

4.5.1 System Configuration and Electric Wiring

With a schedule timer, you can set on/off time twice a day by units of 1 week for up to 128 indoor units.

■ System Configuration

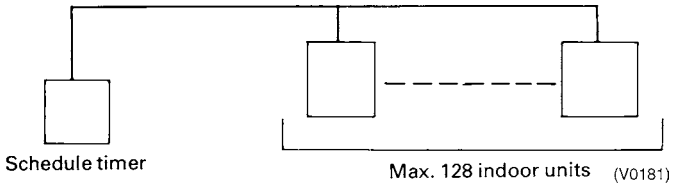

If using the schedule timer alone, you don't have to set the centralized control group No. for group control.

■ **Transmission Wiring**

<Indoor Unit Wiring>

1. If using the schedule timer alone:

■ For the schedule timer's power supply, connect the schedule timer (D1, D2) with the connector (X18A) on the indoor unit PC board by crimped style terminal with the attached electric wire.

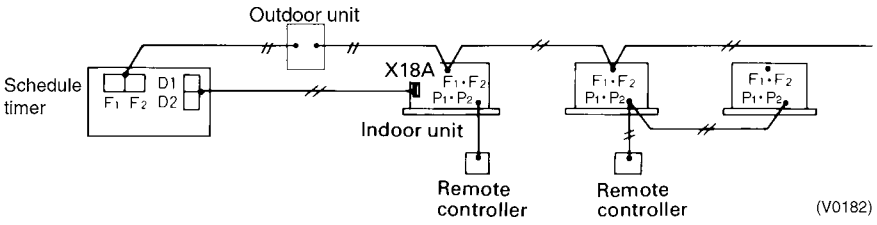

2. If using in combination with other optional controllers for centralized control:

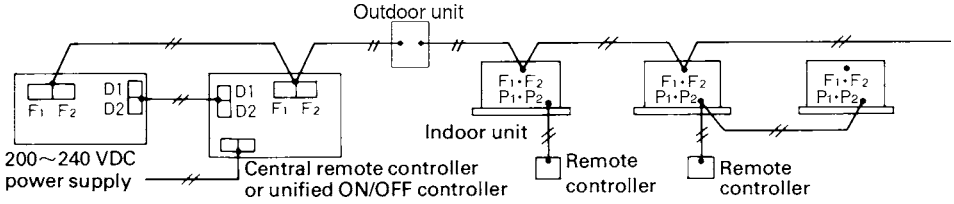

Transmission wiring for control: 0.75~1.25 mm^2 sheathed vinyl cord or cable (2 wire) ..... Max. 1,000 m (Total Max. 2,000 m)

<Transmission Wiring Connection Example>

1 series wiring, 2 bus wiring, and 3 star wiring are the same as with the central remote controller.

14

4.5.2 Names and Functions (DST301BA61)

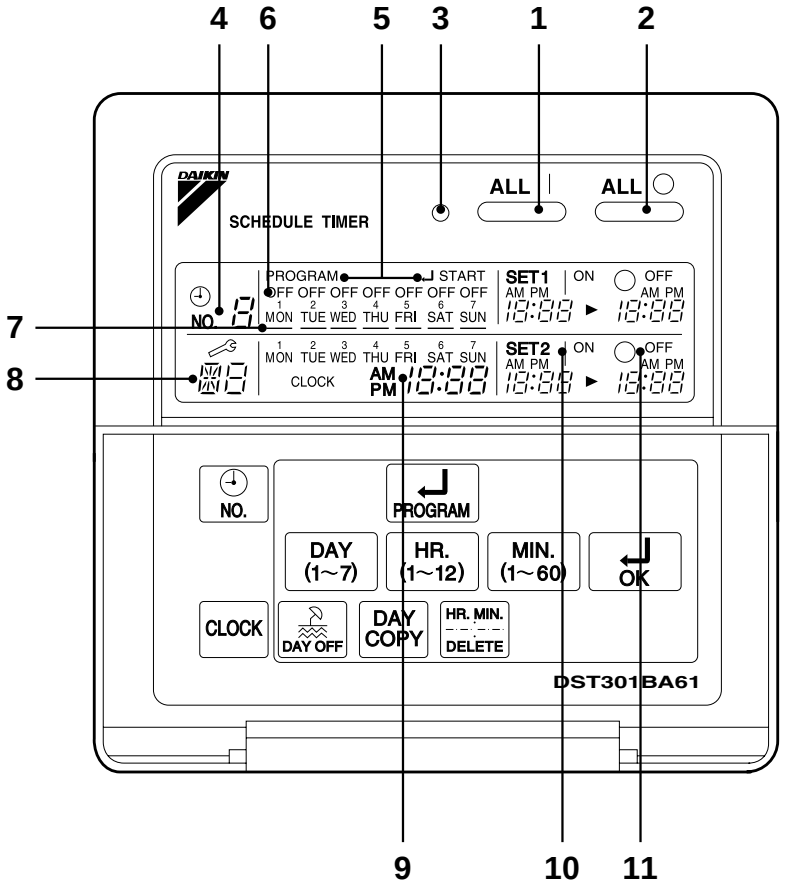

Fig. 1

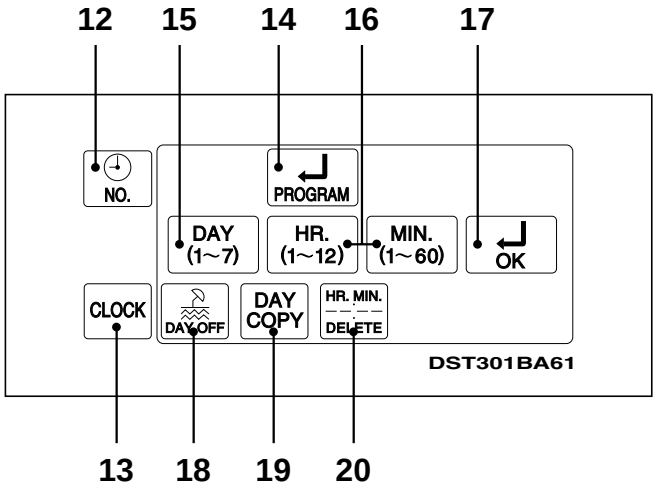

Fig. 2

3P124623-5C

4.5.3 Names and Functions of Operating Section (Fig. 1, 2)

1	**UNIFIED OPERATION BUTTON “ ALL | ”**
	Press this button to perform the unified operation regardless of the No. of programmed time.
2	**UNIFIED STOP BUTTON “ ALL ○ ”**
	Press this button to perform the unified stop regardless of the No. of programmed time.
3	**OPERATION LAMP (RED)**
	The light turns on during the operation of the indoor unit.
4	**DISPLAY “ NO. 8 ” (TIME NO.)**
	Displays the time No. only when used in conjunction with the central remote controller.
5	**DISPLAY “PROGRAM ↵START.” (PROGRAMMING START)**
	The light turns on when the timer is programmed.
6	**DISPLAY “ OFF ” (HOLIDAY SETTING)**
	Lights above the day of the week set as holiday. The operation controlled by timer is not available on that day.
7	**DISPLAY “ — ” (SETTING OF DAYS OF A WEEK)**
	Flashes below the day of the week programmed.
8	**DISPLAY “ 88 ” (MALFUNCTION CODE)**
	Displays the contents of malfunction during the stop due to malfunction.
9	**DISPLAY “ 1MON 2TUE 3WED 4THU 5FRI 6SAT 7SUN CLOCK AM PM 10:00 ” (PRESENT TIME)**
	Displays the present day of the week and time.
10	**DISPLAY “ AM PM | ON 10:00 ” (PROGRAMMED TIME OF SYSTEM START)**
	Displays the time programmed to start.
11	**DISPLAY “ ○ OFF AM PM 10:00 ” (PROGRAMMED TIME OF SYSTEM OFF)**
	Displays the time programmed to stop.
12	**TIME NO. BUTTON “ NO. ”**
	Press this button to select time No..
13	**CLOCK ADJUSTING BUTTON “ CLOCK ”**
	Press this button to set the present time.
14	**PROGRAMMING START BUTTON “ ↵ PROGRAM ”**
	Press this button to set or check the No. of programmed time. Press it again after you are through with the program.
15	**BUTTON FOR SELECTING DAYS OF A WEEK “ DAY (1~7) ”**
	Press this button to select the day of the week.
16	**HOUR/MINUTE BUTTON “ HR. (1~12) MIN. (1~60) ”**
	Press this button to adjust the present time and the programmed time.
17	**TIMER ON BUTTON “ ↵ OK ”**
	Press this button to set the present time and the programmed time.
18	**HOLIDAY SETTING BUTTON “ DAY OFF ”**
	Press this button to set holidays.
19	**BUTTON FOR COPYING PROGRAM OF PREVIOUS DAY “ DAY COPY ”**
	Use this button to set the No. of programmed time same as that of the previous day.
20	**PROGRAM CANCELING BUTTON “ HR. MIN. DELETE ”**
	Use this button to set the programmed time to cancel. The display shows “ – ; – – ”.

(Note)
1. Please note that all the displays in the figure appear for explanation purpose or when the cover is open.

C: 3P124623-5C

14

4.5.4 Dimension

Schedule Timer

DST301BA61

Unit (mm)

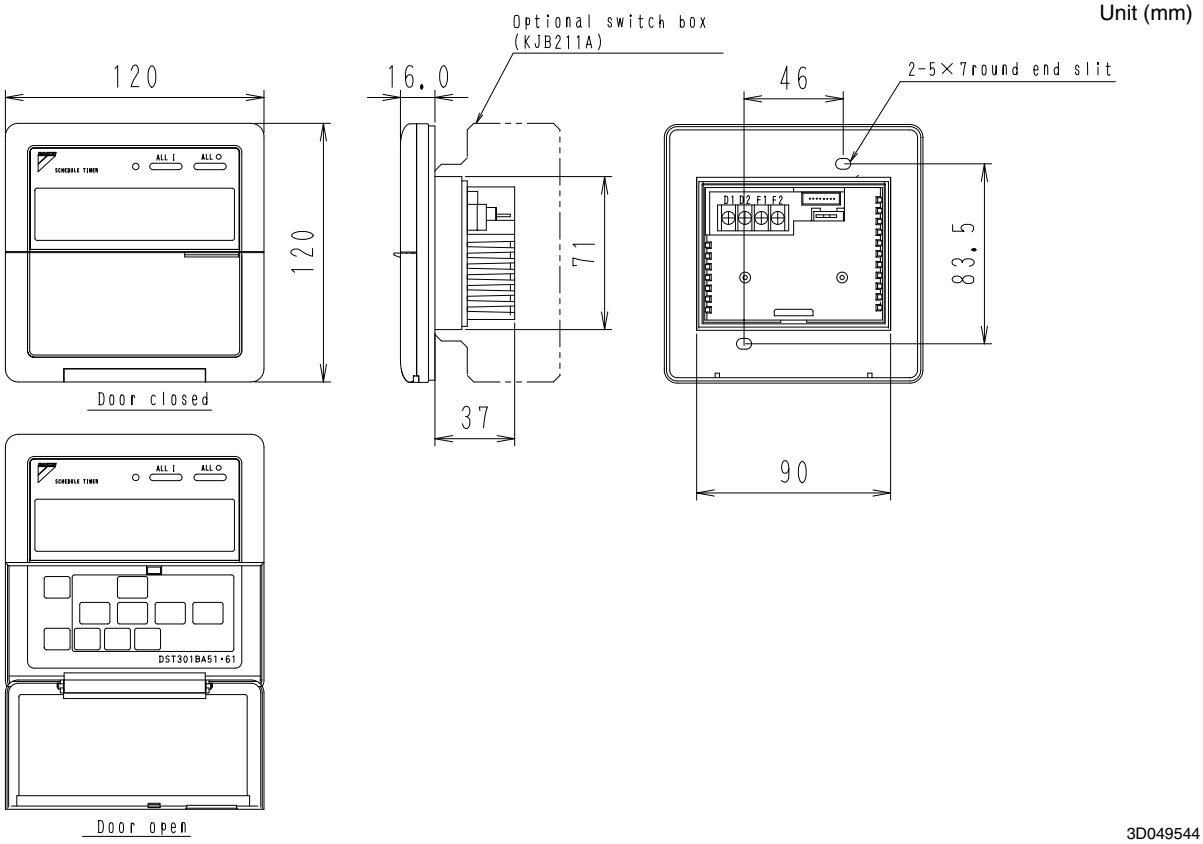

3D049544

4.5.5 Installation and Initial Setting

1. Remove the upper part of the remote controller.

- Insert a minus screwdriver (2 locations) into the recess between the upper part and the lower part of the remote controller and twist the screwdriver lightly.
  (The PC board is attached with the upper part of the remote controller. Do not damage electric parts with a screwdriver, etc.)

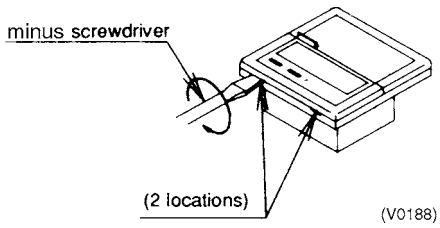

- Attach the lower part to the electrical box (part to be procured in the field) with the provided installation screws. (Select a flat face as an installation place. Do not tighten the installation screws excessively not to damage the lower part of the remote controller.)

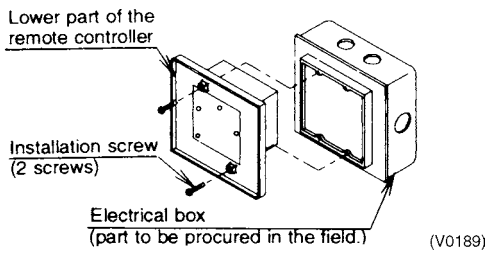

For part to be procured in the field electrical box, use KJB211A (optional accessory).

C: 3P162015A

2. Initial Setting

1. Setting connector for individual use (X1A) (Factory set : OFF) (Set for individual use only)

- **For individual use of schedule timer**
  Insert the connector attached with the body case on the PC board.
- **For combined use with other optional controllers for centralized control**
  Do not change the factory setting.

2. Control mode selector (SS2) (Set for individual use only)

By changing the switch, setting mode of individual and centralized operation is available.

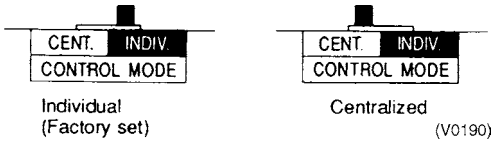

Note:
When used with other optional controllers, control mode of central remote controller and unified ON/OFF controller have the priority.

3. Setting of the sequential operation function

The schedule timer is equipped with a sequential operation function that sequentially turns indoor units on in 2-second intervals during unified operation.
(Sequential operation is factory set to “ON.”)
To switch sequential operation ON or OFF, set as follows.

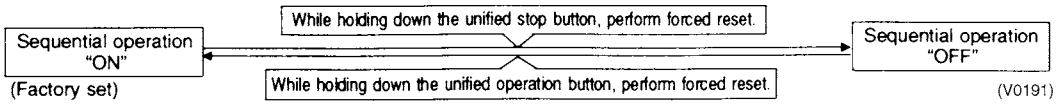

Note:
The sequential operation function is designed to reduce the load on the power supply equipment, but does not guarantee that compressors will not be started simultaneously. You cannot therefore count on a capacity reduction effect by power supply equipment breaker selection.

4. Forced Reset Switch (SS1)

When changing the setting of the connector for individual use, etc., the switch can be reset simply by setting it to the reset side once and returning to the normal side. This procedure enables to reset without turning off the power. (Set the normal side at normal operation.)

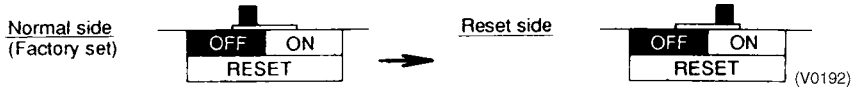

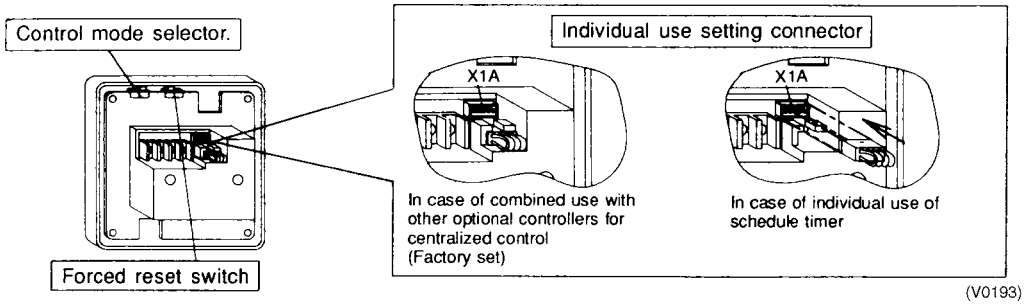

C: 3P162015A

14

5. Setting for special function

When you want to have a programmed operation of a part of indoor units by using only schedule timer, cut off J1 and supply the power again.

You can have a programmed operation of the indoor units set the address for central control by local remote controller.

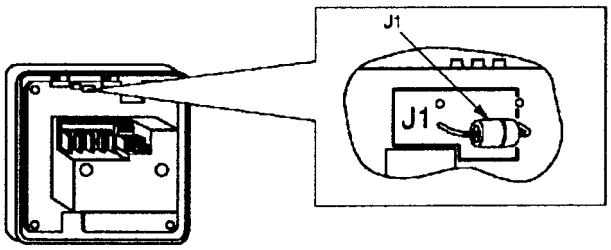

3. Transmission Wiring

- **In case of individual use of schedule timer**

  Connect terminals of the schedule timer (F1, F2) with terminals of the indoor unit (F1, F2). Connect terminals of the schedule timer (D1, D2) and the connector on the indoor unit PC board, using the attached electric wire and crimp style terminals.

  Prevent the connection part of crimp style terminal from getting out of the electric parts box of indoor unit.

- **In case of combined use with other optional controllers for centralized control**

  Connect terminals of the schedule timer (F1, F2, D1, D2) and the terminals of the central remote controller (or unified ON/OFF controller).

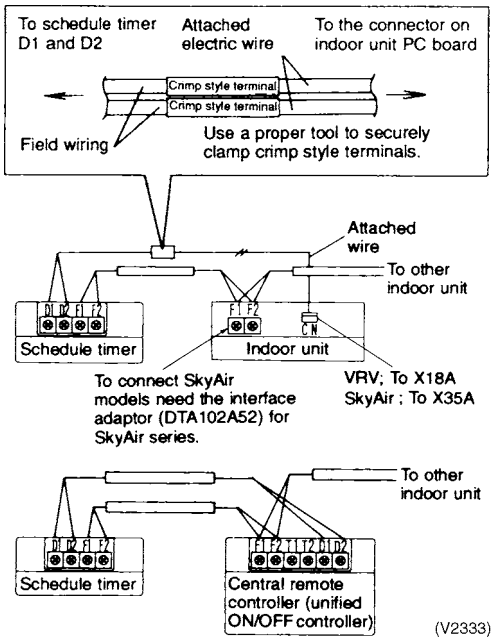

Wiring Specifications

	F1, F2	D1, D2
Wiring	Sheathed Wire (2 wire)	Sheathed Wire (2 wire)
Gauge	0.75-1.25mm^2	0.75-1.25mm^2
Length	Max. 1000m	Max. 150m

NOTES:

1. Electrical box and transmission wiring are not attached.
2. Do not touch the PC board with your hand.
3. Keep transmission wiring at least 50 mm away from power supply wiring to avoid malfunctions.

4. Install the Upper Part of the Remote Controller as before.

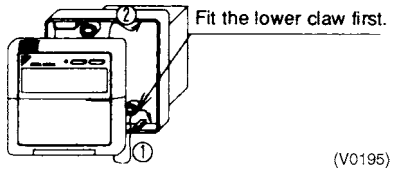

C: 3P162015A

4.5.6 Setting Group No. for Centralized Control

In order to conduct the central remote control using the central remote controller and the unified ON/OFF controller, Group No. settings should be made by group using the operating remote controller.
Make Group No. settings for central remote control using the operating remote controller.

1. While in normal mode, press and hold the TEST switch for a period of four seconds or more to set the system to "Field Setting Mode".”
2. Select the MODE No. “00” with the “ ” button.
3. Use the “ ” button to select the group No. for each group.
   (Group numbers increase in the order of 1-00, 1-01, ... 1-15, 2-00, ... 4-15.)
4. Press “ ” to set the selected group No.
5. Press “ TEST ” to return to the NORMAL MODE.

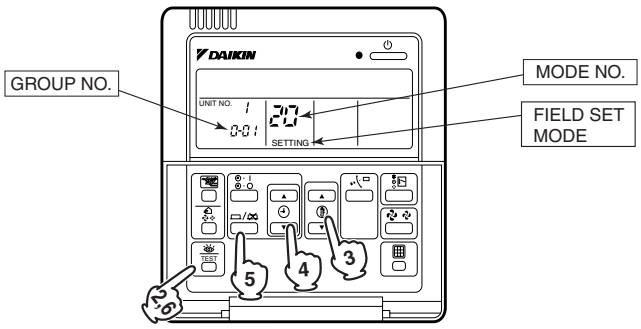

Note:

- For simplified remote controller, see the installation table.

NOTICE

Enter the group No. and installation place of the indoor unit into the attached installation table. Be sure to keep the installation table with the operation manual for maintenance.

4.5.7 Error Diagnosing Function

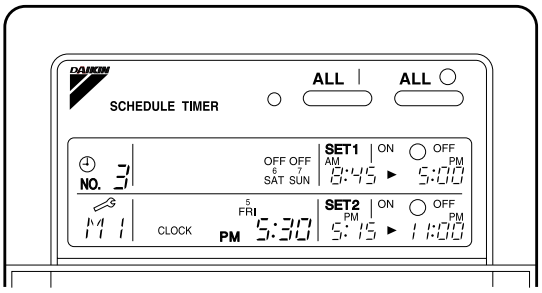

This schedule timer is provided with the malfunction diagnosing function. The malfunction code flashes if there occurs any malfunction in communication, etc. between and among the optional controllers for centralized control. In addition, the operation lamp also flashes if there occurs any malfunction in communication with the indoor unit. Check the contents of the display and contact your DAIKIN dealer because the signals give you the idea of the trouble area.

14

Operation lamp	Malfunction code	Contents of malfunction
Turn off	M1	Failure of PC board of schedule timer. **Fixes** The following causes are possible. Check each one. 1. PC board problems
Turn on or off	M8	Malfunction of transmission between each optional controllers for centralized control. **Fixes** Check all central devices which are connected (e.g., power supply, transmission wiring, etc.).
Turn on or off	MA	Improper combination of optional controllers for centralized control. **Fixes** The following causes are possible. Check each one. 1. Are all central devices combined correctly? 2. Is the master central connector attached to two or more central devices? 3. Are there 128 or more indoor units connected?
Turn on or off	MC	Address failure of schedule timer. **Fixes** The following causes are possible. Check each one. 1. Do the control range addresses in the central remote controller overlap? 2. Do the control range addresses in the on/off controller overlap? 3. Are there 2 or more schedule timers connected?
Flash	UE	Malfunction of transmission between indoor unit and optional controllers for centralized control. **Fixes** Inspect all indoor units which are displaying an error (e.g., power supply, transmission wiring, etc.).
Flash	—	Malfunction in indoor unit (Refer to the malfunction codes of the indoor remote controller, while also read the “ CAUTION FOR SERVICING ” attached to the indoor unit.)

3P124623-5C

4.6 <DCS302CA61 / DCS301BA61 / DST301BA61> Combinations of Optional Controllers for Centralized Control

Besides using the various optional controllers for centralized control by themselves, a schedule timer or unified ON/OFF controller can be combined with and connected to the central remote controller. By devising a component system such as this, you can freely construct the ideal central control system according to use and scale.

4.6.1 System Example

■ **Unified ON/OFF controller**

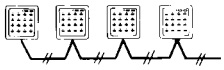
(V0197)

Connect a unified ON/OFF controller according to the number of indoor units. A network consisting of up to 16 groups×8 units=128 groups can be constructed using a single line.

■ **Central remote controller + unified ON/OFF controller**

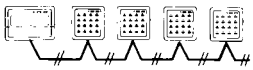
(V0198)

Combines the high functionality of a central remote controller and the easy operation of a unified ON/OFF controller. Centrally controls up to 128 groups of indoor units.

■ **Schedule timer + central remote controller**

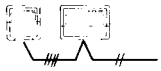
(V0199)

Lets you set up to 8 patterns of weekly schedule for turning air-conditioning equipment ON/OFF twice a day. Operates up to 128 groups of indoor units individually or by zone according to a programmed schedule.

■ **Schedule timer + unified ON/OFF controller**

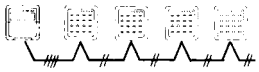
(V0200)

Lets you set ON/OFF for twice a day.
Operates up to 128 groups of indoor units all together according to a programmed schedule.

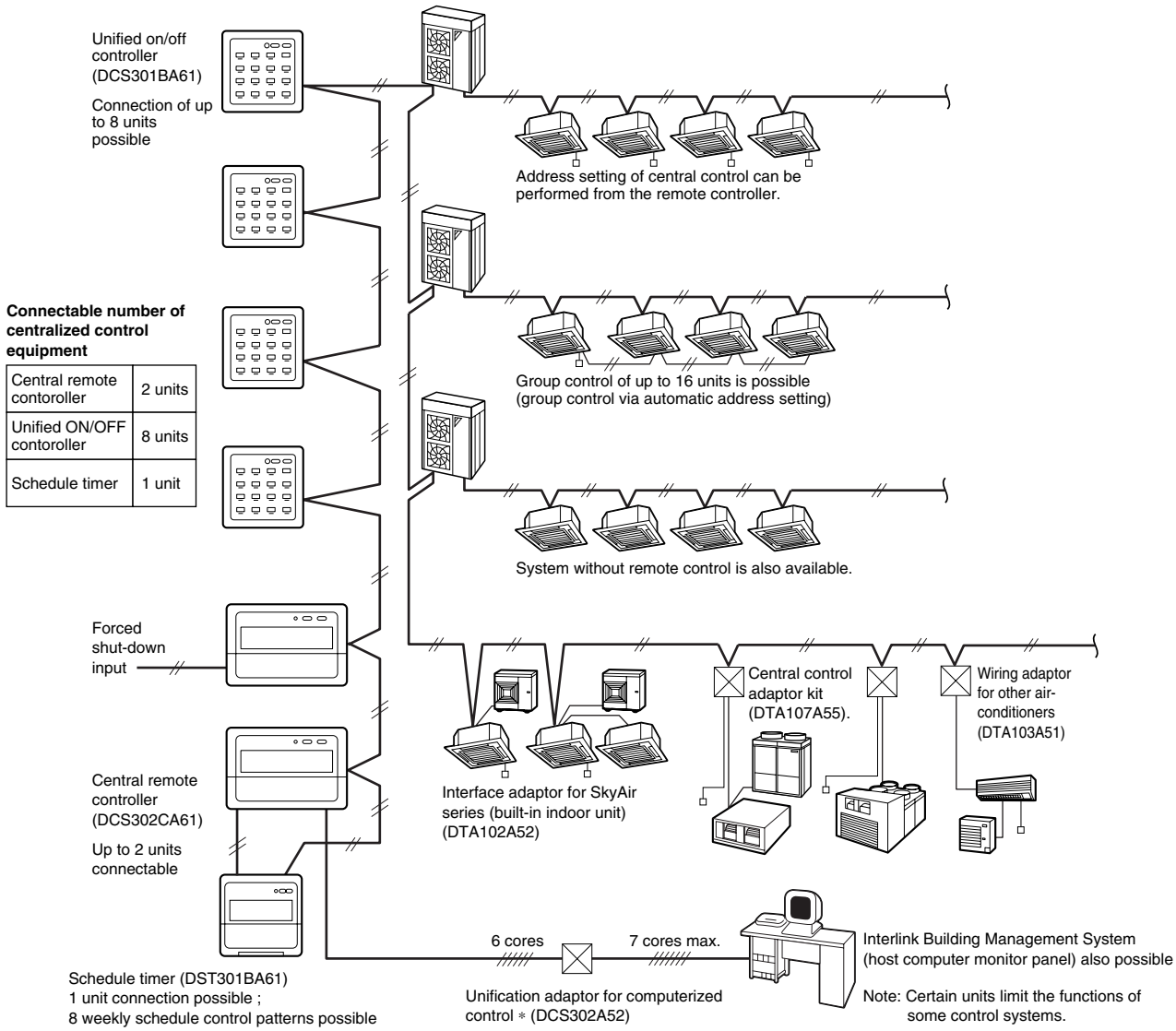

You can freely combine the central controllers within the limitation of the following number of each controller; 1~4 units of central remote controllers, one unit of schedule timer and 1~16 units of unified ON/OFF controllers. However, the maximum number of the indoor units to be controlled is 128 units for one system in any combination of the central controllers.

■ **Connection Pattern for Optional Controller for Centralized Control**

Central Remote Controller DCS302CA61	Unified ON/OFF Controllers DCS301BA61	Schedule Timer DST301BA61
1~4	—	—
	1~16	—
		1
	—	1

The maximum number of indoor units is based on one unit in each zone and is also under the double central control system.

4.6.2 Electric Wiring

Combination of 1 Central Remote Controller, 1 Schedule Timer, 3 Unified ON/OFF Controllers

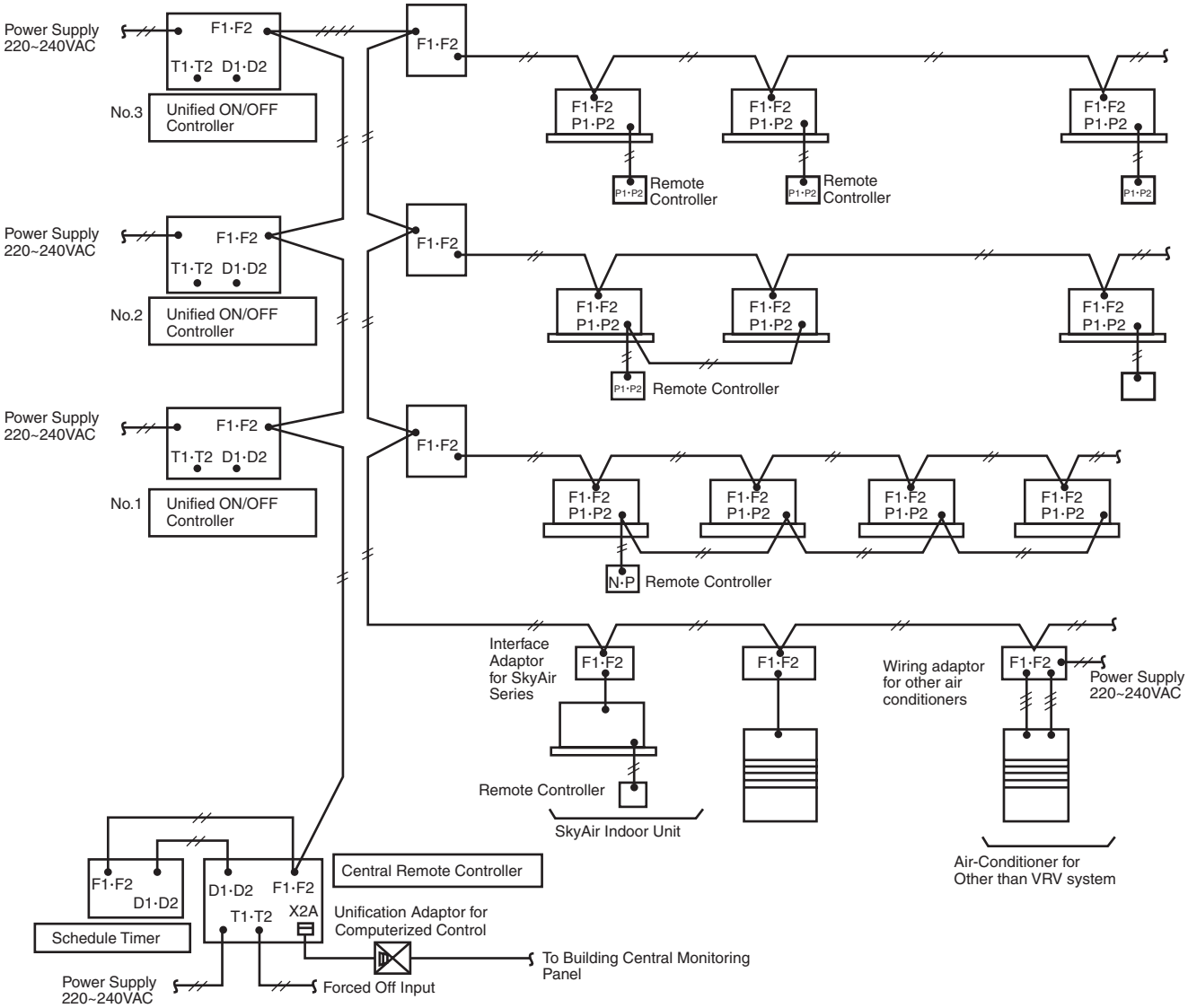

Note) Diagram with an outdoor unit omitted for air-conditioners for Sky Air installation.

4.6.3 Initial Settings for Central Control Equipment

1. Central Remote Controller

- Leave the master control connector (X1A) connected.
  (Connected when shipped from the factory)
  The connector is to be connected to only 1 central line.
- Operation control setting
  Sets the priority ranking of control for the central remote controller and remote controller for indoor units.
- Zone setting
  Sets the zones when several groups are controlled as one group.

2. Unified ON/OFF Controller (No.s 1, 2, and 3 in the figure above)

- Remove the master control connector (X1A).
- Control range setting switch (DS1)
  Sets the range of group No.s for each group of indoor units to be controlled by unified ON/OFF controllers no.1,2 and 3 in the figure above. 16 units (16 groups) can be set by 1 unified ON/OFF controller.
- Control mode switch (DS2)
  Sets priority ranking of control for unified ON/OFF controllers and remote controllers for indoor units. If using in combination with a central remote controller, the central remote controllers control mode is given priority.

3. Schedule Timer

- Leave the setting connector for individual use (X1A) disconnected. (Disconnected when shipped from the factory)
- Control mode switch (SS2)
  Sets the priority ranking of control for the schedule timer and remote controllers for indoor units. If using in combination with a central remote controller, the central remote controllers control mode is given priority.

4.6.4 Group No. Setting for Central Control

1. Setting by Remote Controller for Indoor Units

- Sets group No.s in local setting mode by remote controller. (Group No.s are 1-00~1-15, 2-00~2-15 up to 8-00~8-15)

2. Adaptor PC Board Setting

Sets group No. setting switches RS1 and RS2 for central control on PC board when using an interface adaptor for SkyAir series, or wiring adaptor for other air-conditioners.
RS1 (Upper): 1~4 (1~8 in case of interface adaptor for SkyAir Series)
RS2 (Lower): 0~F

4.7 <DCS601C51> intelligent Touch Controller

4.7.1 Feature

This controller is a central remote controller offering higher functions than those of the previous controller DCS302C(A)61, and easier operation.
Up to 64 groups of indoor units may be connected to 1 unit of this controller.



This controller aims to be a product positioned between the current central controlling device (central controller DCS302CA61) and the controller D-BIPS for large scale buildings (in both the viewpoints of application area and functional grade), and is a central controller most suitable for middle and small size buildings.

< Products Features >

1. High Level Functions
   - Annual schedule control
   - Electricity proportional distribution function (option)
   - Air net function (DCS601C51 only)
2. Easy Operation
   - Color liquid crystal
   - Icon display
   - Touch panel application
   - Air conditioner name and zone name input available
3. D-III NET × 1 line (64 units)
4. Saving expenses
   - Controlling personnel not required (saving control expenses)
   - Energy saving schedule
   - Functions equal to those of a compact monitor panel

(V2318)

■ **Operation Menu**
intelligent Touch Controller is capable of starting/stopping of the operation by the group or zone. Collective starting/stopping is also available.

■ **Air Conditioner Detail Setup**
Temperature setting, switching between temperature control modes, switching of speed and direction of wind and remote control mode setting are available by the group, by the zone or collectively.

■ **Monitoring of Various Information on Indoor Units**
Information on operation such as the operation mode and temperature setting of the indoor units, maintenance information including the filter or element cleaning sign, troubleshooting information such as error codes can be displayed by the group or the zone.

■ **Diversified Operation Modes**
Operation can be controlled both with the main unit and the remote control to provide diversified operation management. Setting with the main unit allows the following remote control settings by the group, by the zone or collectively:

1. Start/Stop	2. Operation Mode	3.Temperature Setting
:(Remote control) Inhibited	:(Remote control) Inhibited	:(Remote control) Inhibited
:(Remote control) Permitted	:(Remote control) Permitted	:(Remote control) Permitted
:Priority		

■ **Zone Control Simplifying Complicated Setting Operations**
Up to 64 groups can be controlled with the intelligent Touch Controller.
More than one group can be consolidated into a zone, which can be registered, to allow the following settings by the zone. This eliminates the need for repeating the same setting operation for each group. Function to allow collective setting for all groups is also available.

· Start/stop · Temperature setting · Switching between operation modes
· Setting of direction and fan speed · Disabling/enabling the remote control

■ **Detailed Scheduled Operation Control**
The intelligent Touch Controller allows detailed scheduled operation by the group, by the zone or collectively. Up to 8 options for annual schedule can be set. Each schedule can include four types of plans : for Monday, Tuesday... Sunday, Special day 1~10, Special days 1 and Special days 2. Each of the plans allows setting of up to 16 operations.

■ **Handy Automated Control**
The intelligent Touch Controller can do the following.
· Change Over Settings : automatically switches between cooling and heating according to the room temperature.
· Temperature Limit Setting : prevents the temperature from rising too high or too low in unmanned rooms.
· Heating Optimization Settings : stops uncomfortable hot air from blowing when the heating the thermostat is off.

4.7.2 System Overview

This intelligent Touch Controller is capable of controlling/monitoring up to 64 groups of indoor units (hereafter “groups”).

The main functions of the intelligent Touch Controller include:
1. Collective starting/stopping of operation of the indoor units connected to the intelligent Touch Controller.
2. Starting/stopping of operation, temperature setting, switching between temperature control modes and enabling/disabling of operation with the hand-held remote control by zone or group.
3. Scheduling by zone or group.
4. Monitoring of the operation status by zone or group.
5. Display of the air conditioner operation history.
6. Compulsory contact stop input from the central monitoring panel (non-voltage, normally-open contact).
7. Power distribution of the air conditioners. (With the optional DCS002C51)
8. Control and Monitoring of air conditioner with personal computer by the Controller (with the optional DCS004A51).

* A group of indoor units include:

① One indoor unit without a remote control. ② One indoor unit controlled with one or two remote controls.

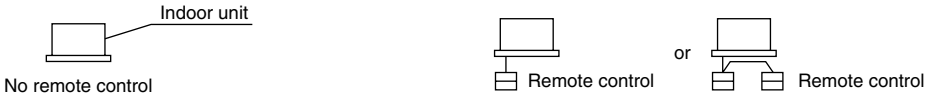

③ Up to 16 indoor units controlled with one or two remote controls.

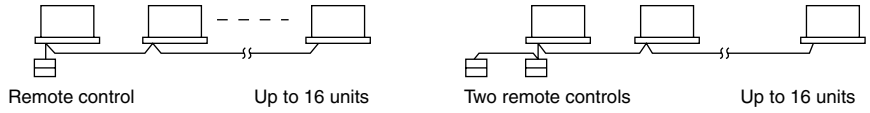

* Zone control with the intelligent Touch Controller
* Zone control, which allows collective settings for more than one group, is available with the intelligent Touch Controller, which facilitates the setting operations.

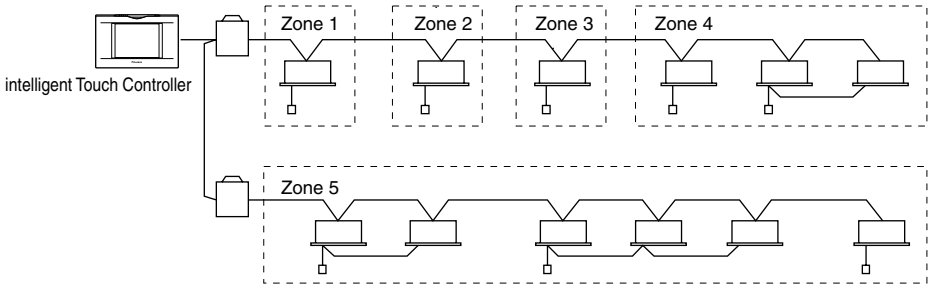

- One setting makes the same setting for all of the units in one zone.
- Up to 128 zones can be set with one intelligent Touch Controller. (The maximum number of groups in one zone is 64.)
- Groups can be zoned at will with the intelligent Touch Controller.
- Units in one group can be divided into more than one zone.

3P073677-12R

4.7.3 Double intelligent Touch Controllers

Using two intelligent Touch Controllers allows central control of indoor units from different places.

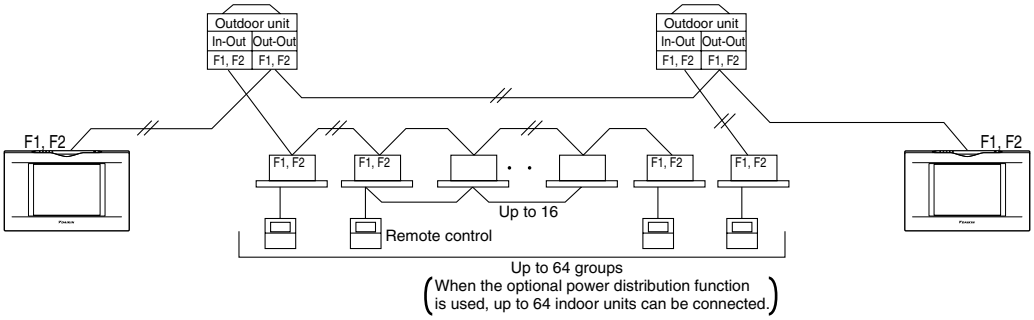

Note

- For combination and settings for double intelligent Touch controllers, be sure to consult the vendor.

(V3017)

4.7.4 Options

Connecting Unification adaptor allows using the contact for normal and abnormal operation signal and collective start/stop with a contact. For details, contact the vendor you purchased the product from.
Also, by connecting DIII NET-plus adapter, it is possible to operate and monitor the indoor units of 64 groups (intelligent Touch Controller plus DIII NET-plus adapter-128 groups in total) additionally.

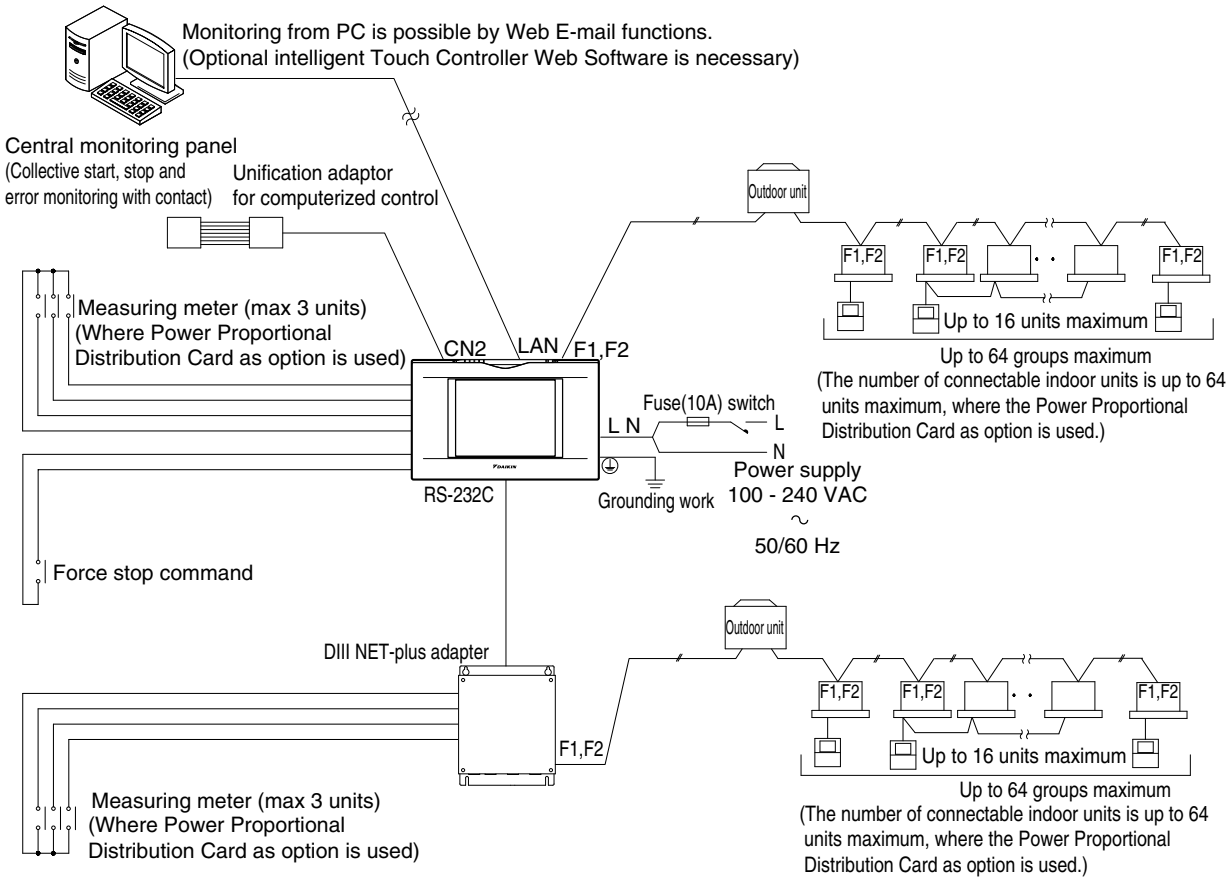

3P073677-12R

4.7.5 Specification

Specification

Power		AC100 - 240V 50/60Hz
Power consumption		10 W maximum
Force stop input		Normally-open contact Contact current approximately 10 mA
Operating temperature range	Ambient temperature	0°C~40°C
	Ambient humidity	85%RH (Non condensing)
Storage temperature range	Ambient temperature	-10°C~50°C
	Ambient humidity	85%RH (Non condensing)
Size		230×147×107 (W×H×D)
Weight (Mass)		1.2kg

Dimension

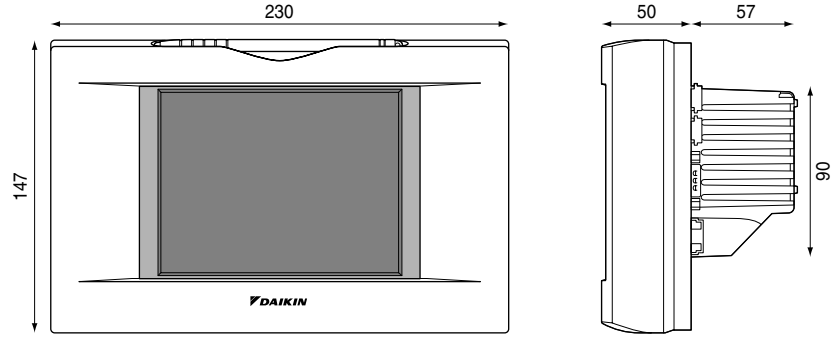

The specification and appearance of the product may be modified for improvement without prior notice.

C : 3P073677-12R

4.7.6 Part Names and Functions

Front and Side View



PCMCIA Card Slot

Used when using the optional Power Proportional Distribution (DCS002C51) or updating the intelligent Touch Controller software to a newer version.

Color LCD with Touch Panel

Provides a display for monitoring and operation.
Be sure to use the touch pen provided for operation.

Touch Pen

Use the touch pen for operation.
Be sure to use the touch pen for operation.
Use caution not to lose the touch pen.
(When the pen is lost, contact the dealer you purchased the product from.)

NOTE

- Be sure to use the touch pen for operation of the touch panel of the intelligent Touch Controller. Operating with an object other than the touch pen provided may cause damage and failure.

3P073677-12R

4.7.7 Terminals on the Back of intelligent Touch Controller

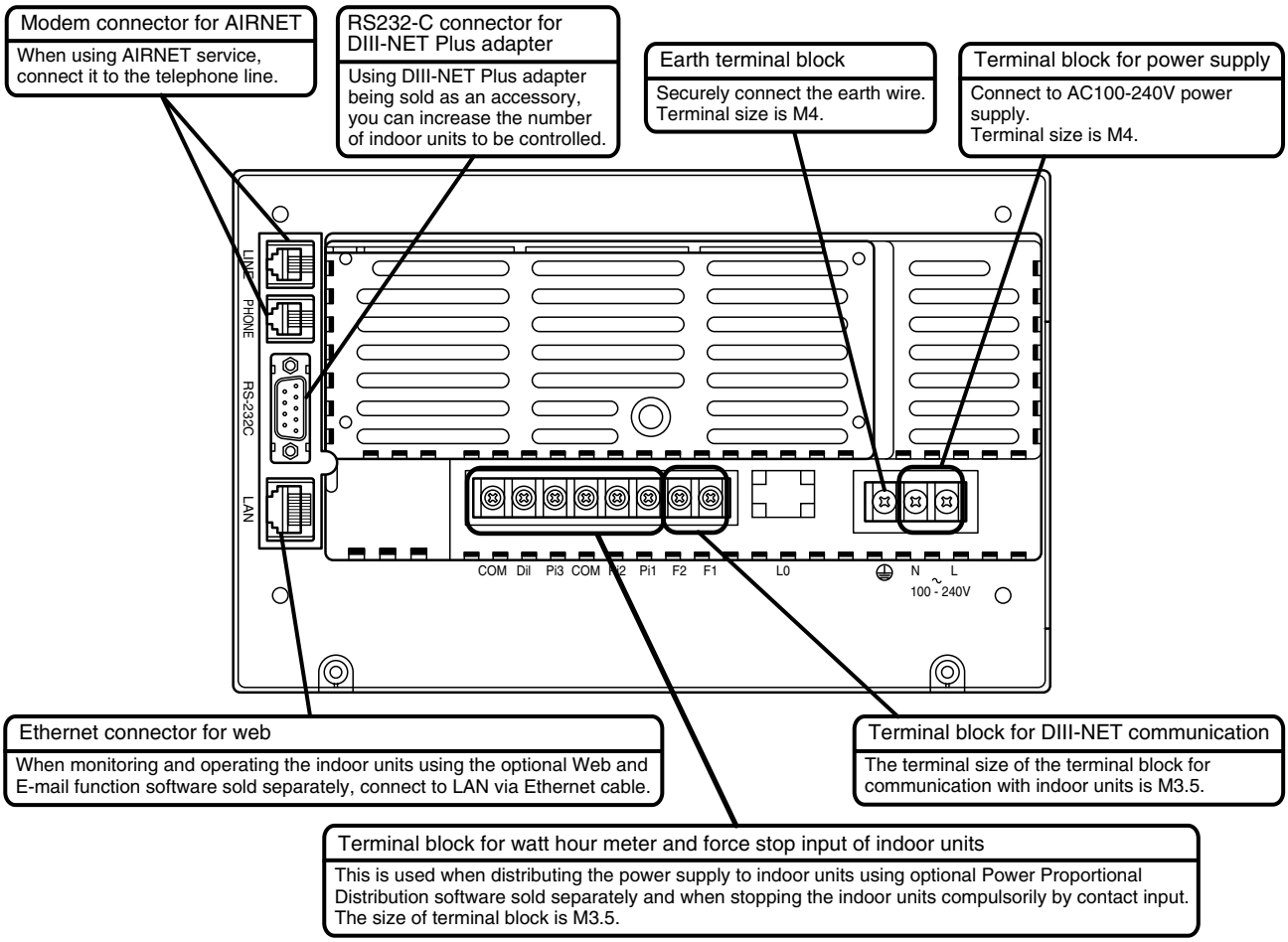

3P073677-12R

14

4.7.8 Part Names on the Monitoring Screen and the Functions

Icon

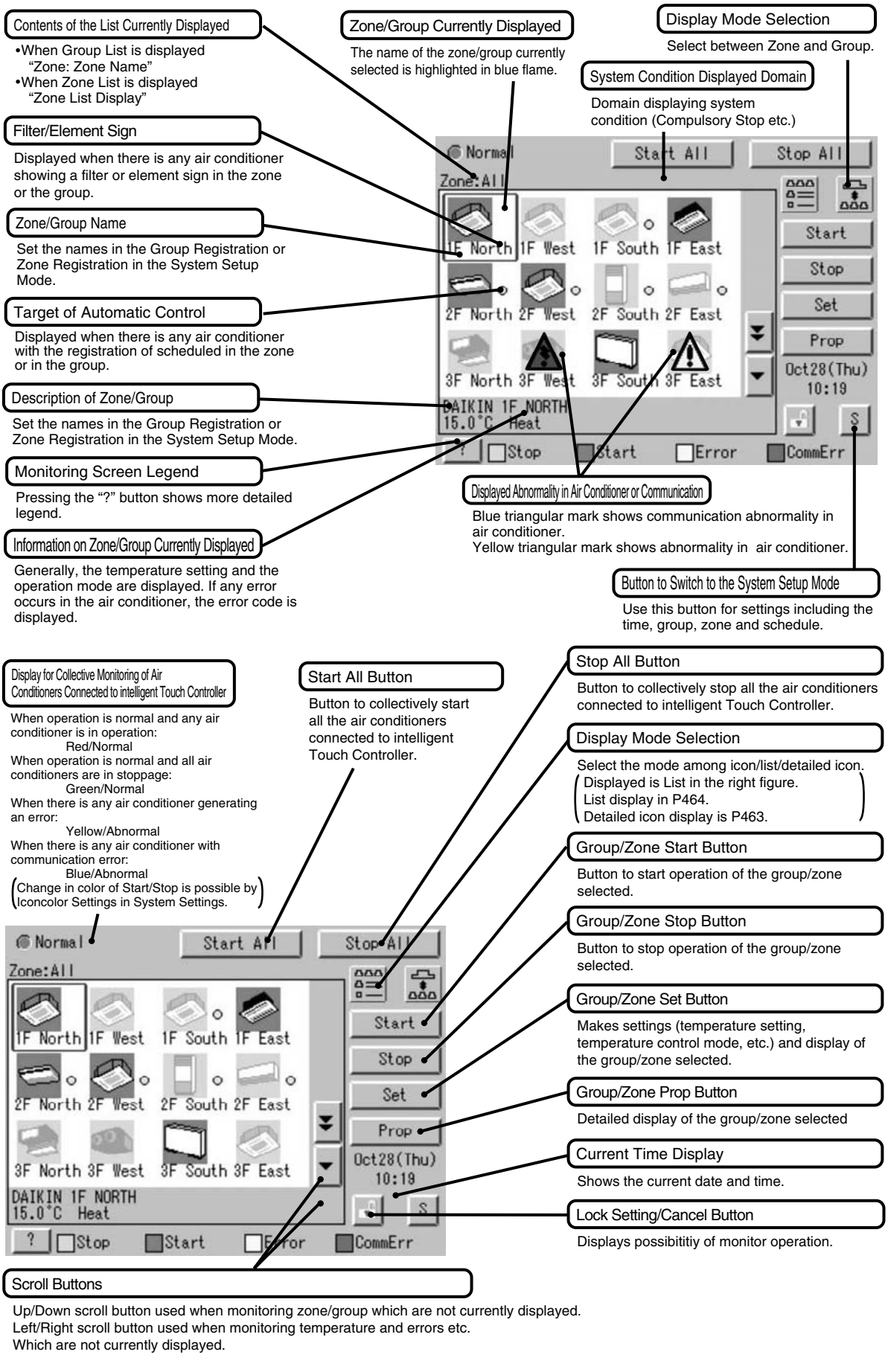

EM04A055A

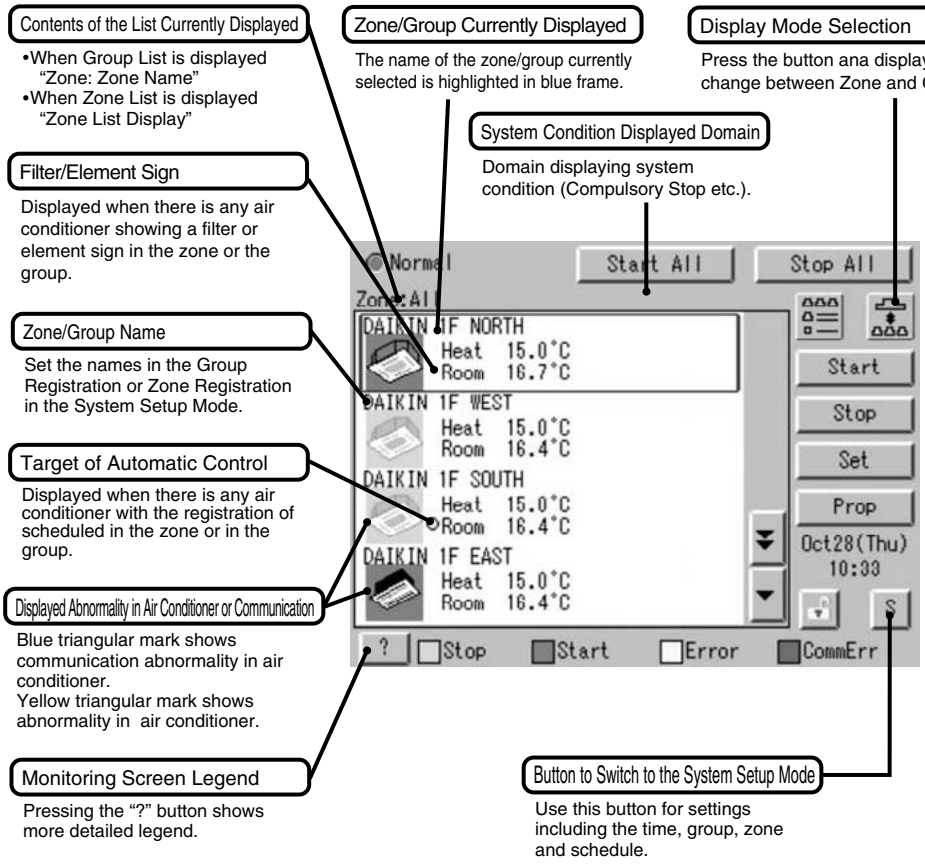

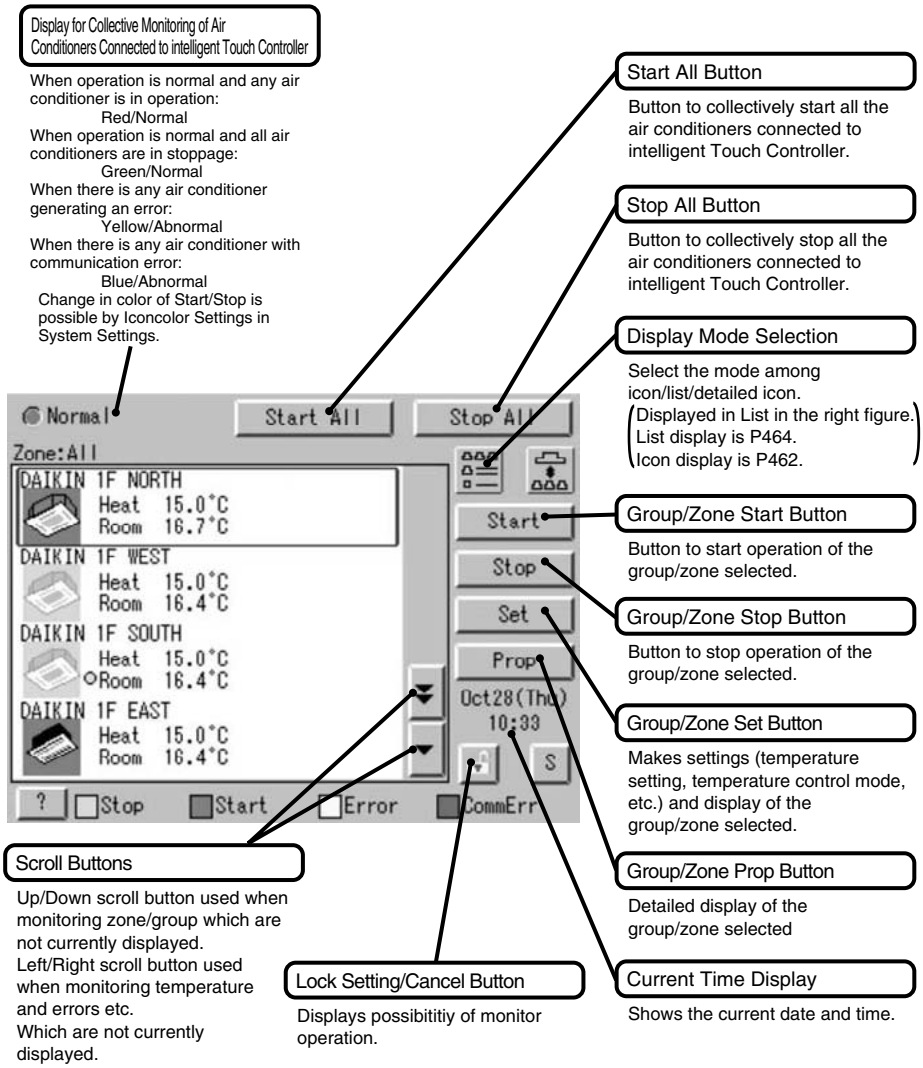

EM04A055A

14

List

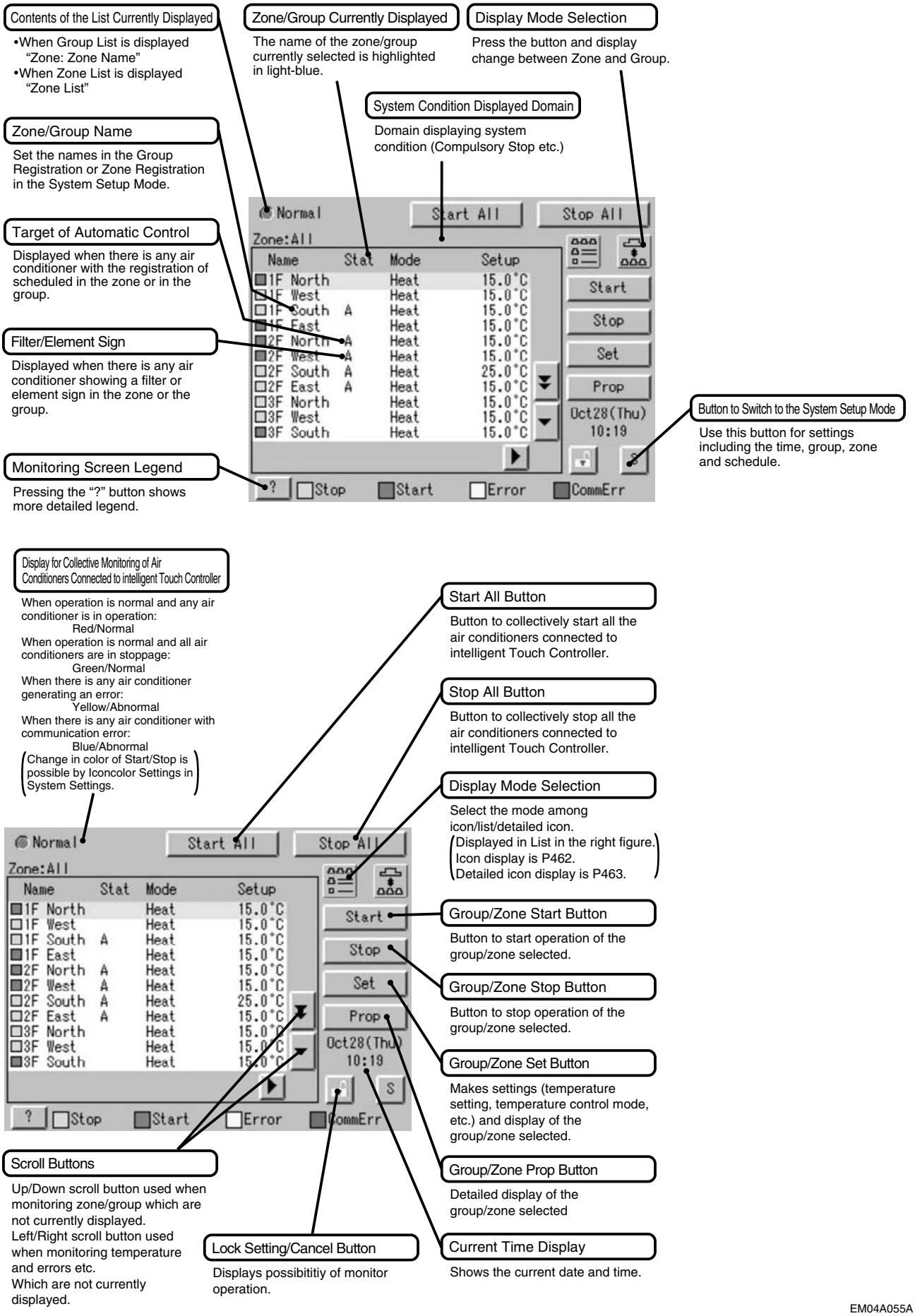
Contents of the List Currently Displayed
•When Group List is displayed
"Zone: Zone Name"
•When Zone List is displayed
"Zone List"
Zone/Group Currently Displayed
The name of the zone/group currently selected is highlighted in light-blue.
Display Mode Selection
Press the button and display change between Zone and Group.
System Condition Displayed Domain
Domain displaying system condition (Compulsory Stop etc.)
Zone/Group Name
Set the names in the Group Registration or Zone Registration in the System Setup Mode.
Target of Automatic Control
Displayed when there is any air conditioner with the registration of scheduled in the zone or in the group.
Filter/Element Sign
Displayed when there is any air conditioner showing a filter or element sign in the zone or the group.
Monitoring Screen Legend
Pressing the "?" button shows more detailed legend.
Button to Switch to the System Setup Mode
Use this button for settings including the time, group, zone and schedule.
Normal
Start All
Stop All
Zone:All
Name Stat Mode Setup
1F North Heat 15.0°C
1F West Heat 15.0°C
1F South A Heat 15.0°C
1F East Heat 15.0°C
2F North A Heat 15.0°C
2F West A Heat 15.0°C
2F South A Heat 25.0°C
2F East A Heat 15.0°C
3F North Heat 15.0°C
3F West Heat 15.0°C
3F South Heat 15.0°C
Start
Stop
Set
Prop
Oct28(Thu)
10:19
?
Stop
Start
Error
CommErr
Display for Collective Monitoring of Air Conditioners Connected to intelligent Touch Controller
When operation is normal and any air conditioner is in operation:
Red/Normal
When operation is normal and all air conditioners are in stoppage:
Green/Normal
When there is any air conditioner generating an error:
Yellow/Abnormal
When there is any air conditioner with communication error:
Blue/Abnormal
(Change in color of Start/Stop is possible by Iconcolor Settings in System Settings.
Start All Button
Button to collectively start all the air conditioners connected to intelligent Touch Controller.
Stop All Button
Button to collectively stop all the air conditioners connected to intelligent Touch Controller.
Display Mode Selection
Select the mode among icon/list/detailed icon.
(Displayed in List in the right figure.
Icon display is P462.
Detailed icon display is P463.
Group/Zone Start Button
Button to start operation of the group/zone selected.
Group/Zone Stop Button
Button to stop operation of the group/zone selected.
Group/Zone Set Button
Makes settings (temperature setting, temperature control mode, etc.) and display of the group/zone selected.
Group/Zone Prop Button
Detailed display of the group/zone selected
Current Time Display
Shows the current date and time.
Scroll Buttons
Up/Down scroll button used when monitoring zone/group which are not currently displayed.
Left/Right scroll button used when monitoring temperature and errors etc.
Which are not currently displayed.
Lock Setting/Cancel Button
Displays possibititiy of monitor operation.
EM04A055A

4.7.9 System Wiring

When wiring, cut off the power supply (using a local switch) and do not apply power until all work has been finished.

Wiring for power supply and Connecting wiring for DⅢ-NET communication of indoor units

In order to perform centralized control of indoor units using this controller, connect the power wiring to terminals L and N, earth wire to earth terminal ⏚ and connecting wiring for DⅢ-NET communication of air-conditioner (indoor unit and outdoor unit) to terminals F1 and F2 respectively as shown in the sketch below.

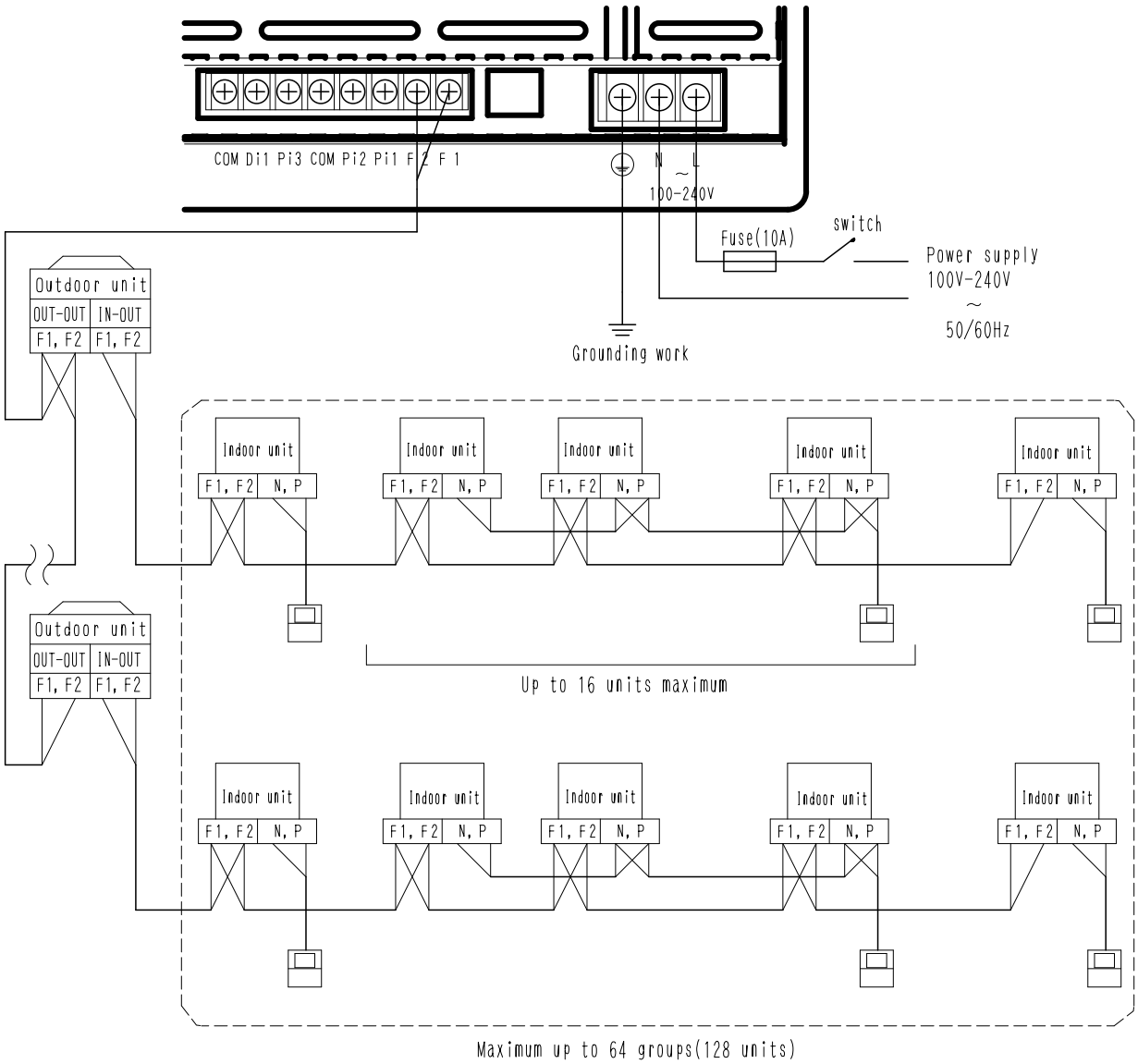

Power cable wiring	1.25mm²
Fuse	10A
Connecting wiring for DⅢ- NET communication of indoor and outdoor units	0.75 - 1.25 mm² vinyl cord or cable with sheath (2 wire) ---Up to 1000 m maximum (wiring length -- up to 2000 m maximum) (When shield cable is used, the wiring length is available up to 1500m.) For the type of electric wire, refer to the design guide.

≪ CAUTION ≫

- Don't fail to perform installation of Grounding work. Don't connect the grounding wire to any of gas pipe, city water pipe, lightning rod, and telephone grounding wire.
- Don't turn ON the power supply (front switch) until all the works are complete.
- The connecting wiring for communication of indoor and outdoor units is a connecting wiring for the control. Don't clamp these cables together with high voltage cables. Failure to observe this instruction would cause control error.
- Don't connect the power cable to F1, F2 terminal blocks. Wrong connection to these terminal blocks could result in damage and burning of the centralized control devices and of the electric parts of the indoor and outdoor units. This is very hazardous. Check each wired cable once more before turning ON the power switch.

1P153198C

14

Wiring for force stop input and for electric power distribution

In order to stop the air-conditioner through force stop input, connect the wiring for force stop input to the terminals Di1 and COM as shown in the sketch below.
In addition, in order to calculate the electric energy using optional Power Proportional Distribution software, connect the wiring for electric energy to the terminals Pi and COM as shown in the sketch below.

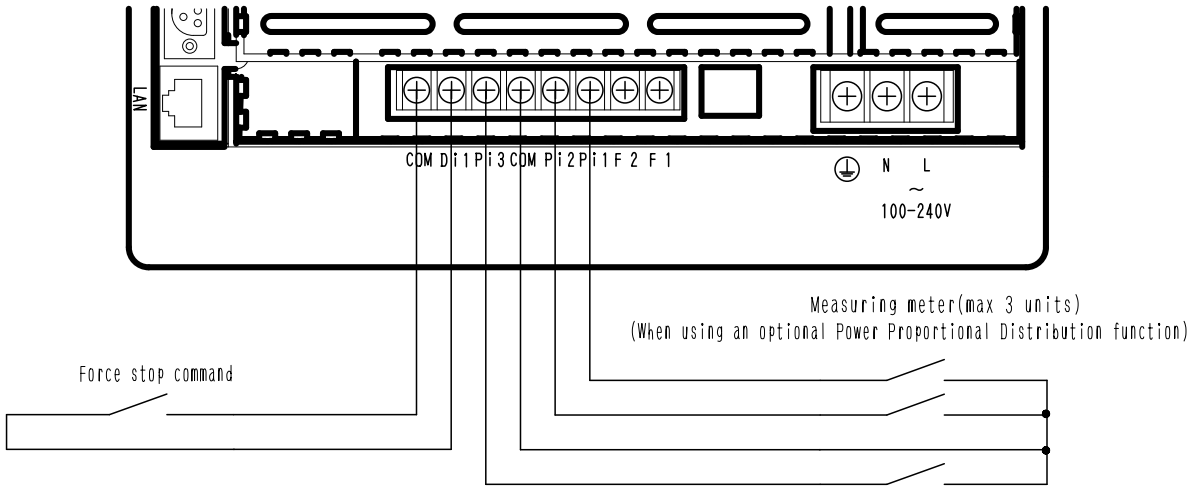

Wiring for force stop input	• 0.75 - 1.25 mm^2 vinyl cord or cable with sheath (2 wire) -- up to 150m maximum • When FORCE-STOP INPUT is kept ON, the indoor units connected thereto are unable to be operated because they are force-stopped. • Use a contact which can guarantee minimum application load DC16V and 10mA. • Use an instantaneous contact of 200msec or more in current feed time, where required.

Meter wiring for power distribution(option)	• 0.75 - 1.25 mm^2 vinyl cord or cable with sheath (2 wire) -- up to 150m maximum
	• The number of connectable indoor units is up to 64 units maximum, where the Power Proportional Distribution Card as option is used.
	• The measuring meters to be connected must meet the requirements specified below.
	  • To be a measuring meter with pulse oscillator. (pulse/kwh)
	  • Pulse band of 100msec or mores
	  • Measuring meter which uses semiconductor relay for pulse output and outputs pulses from non-voltage contact

≪CAUTION≫

- Don't clamp these cables together with high voltage cables. Failure to observe this instruction would cause control error.
- Terminals COM are inter-connected. Connecting to either one is allowed, but the number of cables connectable to one terminal is limited to 2 pieces.
- Don't connect the power cable to Pi, Di, COM terminal blocks. Wrong connection to these terminal blocks could result in damage and burning of the centralized control devices and of the electric parts of the indoor and outdoor units. This is very hazardous. Check each wired cable once more before turning ON the power switch.

1P153198C

Connection to public telephone line

Connect to the telephone line in order to monitor the air-conditioner via AIRNET service.
Connect to modular cable from the public telephone line to the upper connector with a stamping of LINE, and connect the modular cable of the telephone to the lower connector with a stamping of PHONE, as shown in the sketch below.

≪CAUTION≫

- Don't clamp these cables together with high voltage cables. Failure to observe this instruction would cause control error.
- When using AIRNET service, it is necessary to use a separate modem specified by us and enter into Maintenance Agreement with charge.

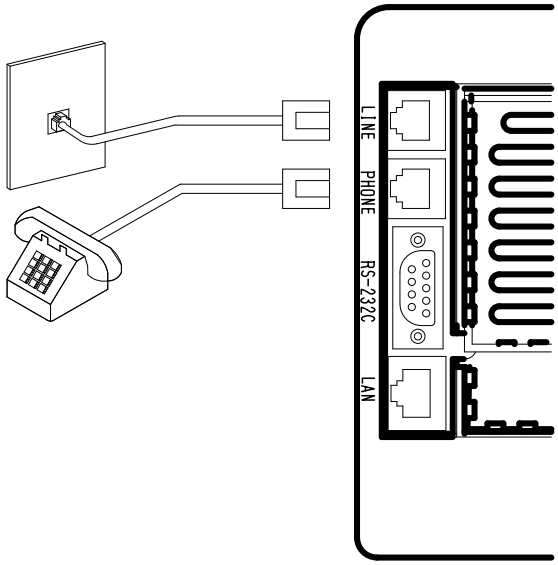

Connection to LAN

In order to monitor/control the air-conditioner using optional Web and E-mail function software sold separately, use a UTP cable to connect to LAN.
Connect the UTP cable to the Ethernet connector with a stamping of LAN.

≪CAUTION≫

- Don't clamp these cables together with high voltage cables. Failure to observe this instruction would cause control error.
- For connecting to LAN, consult with the network system administrator.

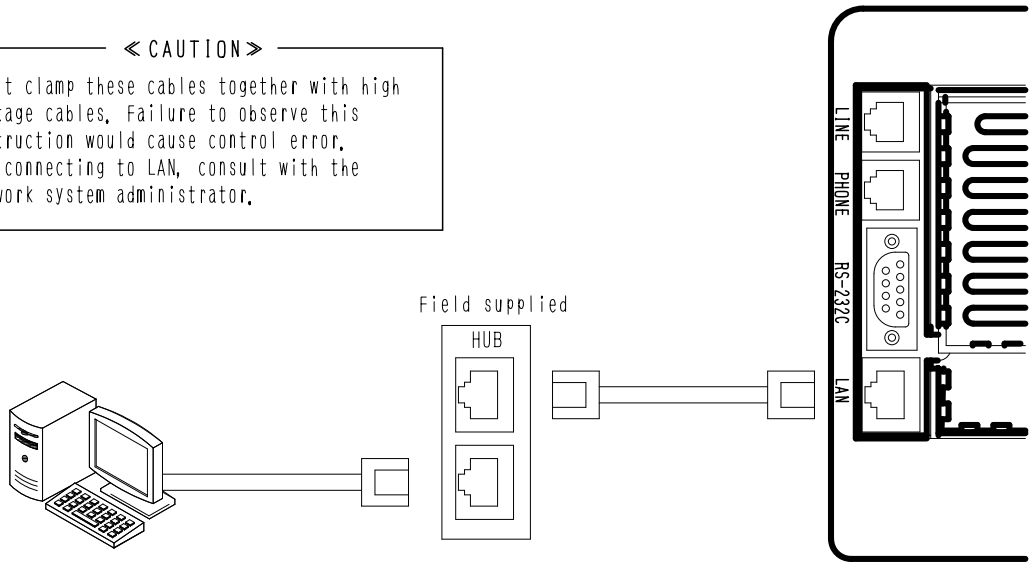

14

1P153198C

DⅢ-NET Plus adaptor connection

In order to increase the number of indoor units to be controlled, connect DⅢ- NET Plus adaptor using RS232-C cable attached to the adaptor.
For details, refer to the installation manual of DⅢ- NET Plus adaptor.

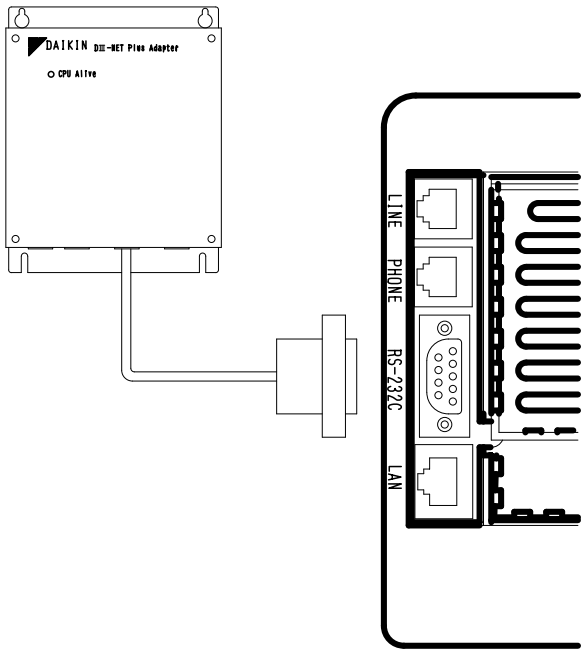

≪CAUTION≫

- Don't clamp these cables together with high voltage cables. Failure to observe this instruction would cause control error.

Connection for Unification Adaptor

In order to perform total start and stop/situation monitoring from central supervisory board, etc., connect a Unification Adaptor sold separately.
As shown in the sketch below, open the controller and connect the cable from the Unification Adaptor to CN2 connector located on the printed board on the lower case.
If you route the cable in the cable guide groove on the lower case, you can make a smart connection without any slack of the cable.

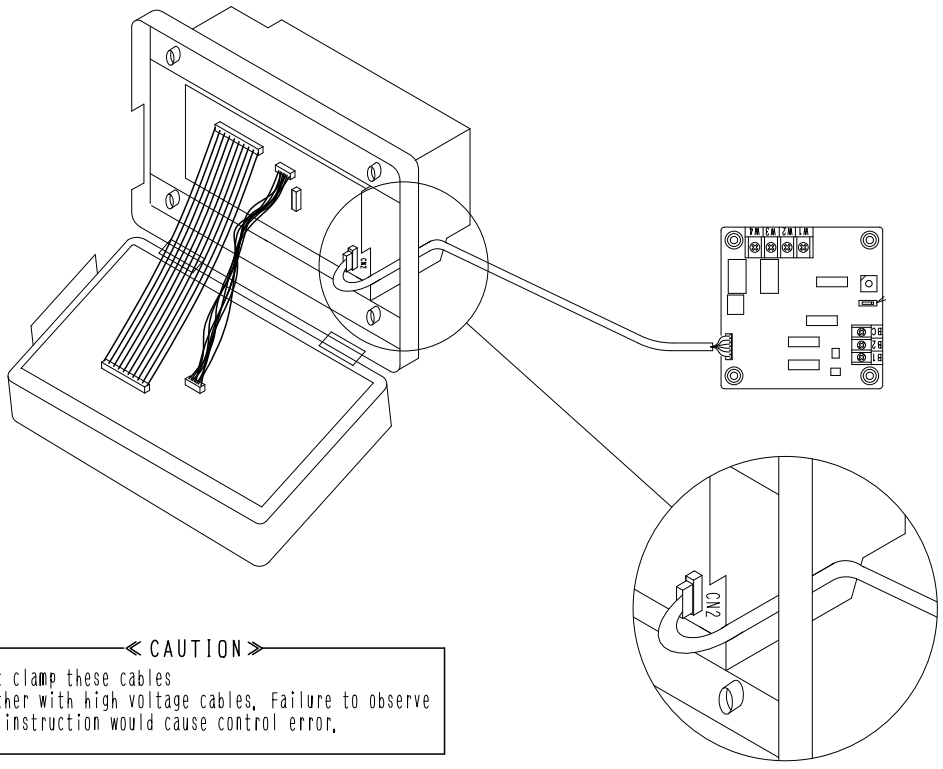

≪CAUTION≫

- Don't clamp these cables together with high voltage cables. Failure to observe this instruction would cause control error.

1P153198C

4.7.10 <DCS002C51> Power Proportional Distribution Card

Function and Outline

Power Proportional Distribution Card, in combination with an existing intelligent Touch Controller, enables to proportionally calculate and display electricity amount used by air conditioner per indoor unit.

Main Functions

Power proportional distribution results data can be saved for 12 months. (max. 12 months and 30 days)

- Per intelligent Touch Controller, power proportional distribution can be calculated for 64 indoor units at maximum.
- When DIII-NET Plus Adaptor is connected, power proportional distribution can be calculated for more 64 indoor units at maximum (a total of 128).
- 3 Electric power meters at maximum can be connected to an intelligent Touch Controller.
- When DIII-NET Plus Adaptor is connected, more 3 Electric power meters at maximum (a total of 6) can be connected.
- Power proportion distribution results data can be saved into a PCMCIA card.
  Data is saved CSV format generally applied to personal computers, so bills can be issued by use of a general purpose table calculation software package in easy manners.
  (A personal computer and a general purpose table calculation software package can be available separately.)

Precautions

This system calculates electricity consumptions by size of indoor units, run time, expansion valves open gap, suction rate and the number of pulses from the power meters installed at the Outdoor Units.
This method is not calculated by direct measurement alone.

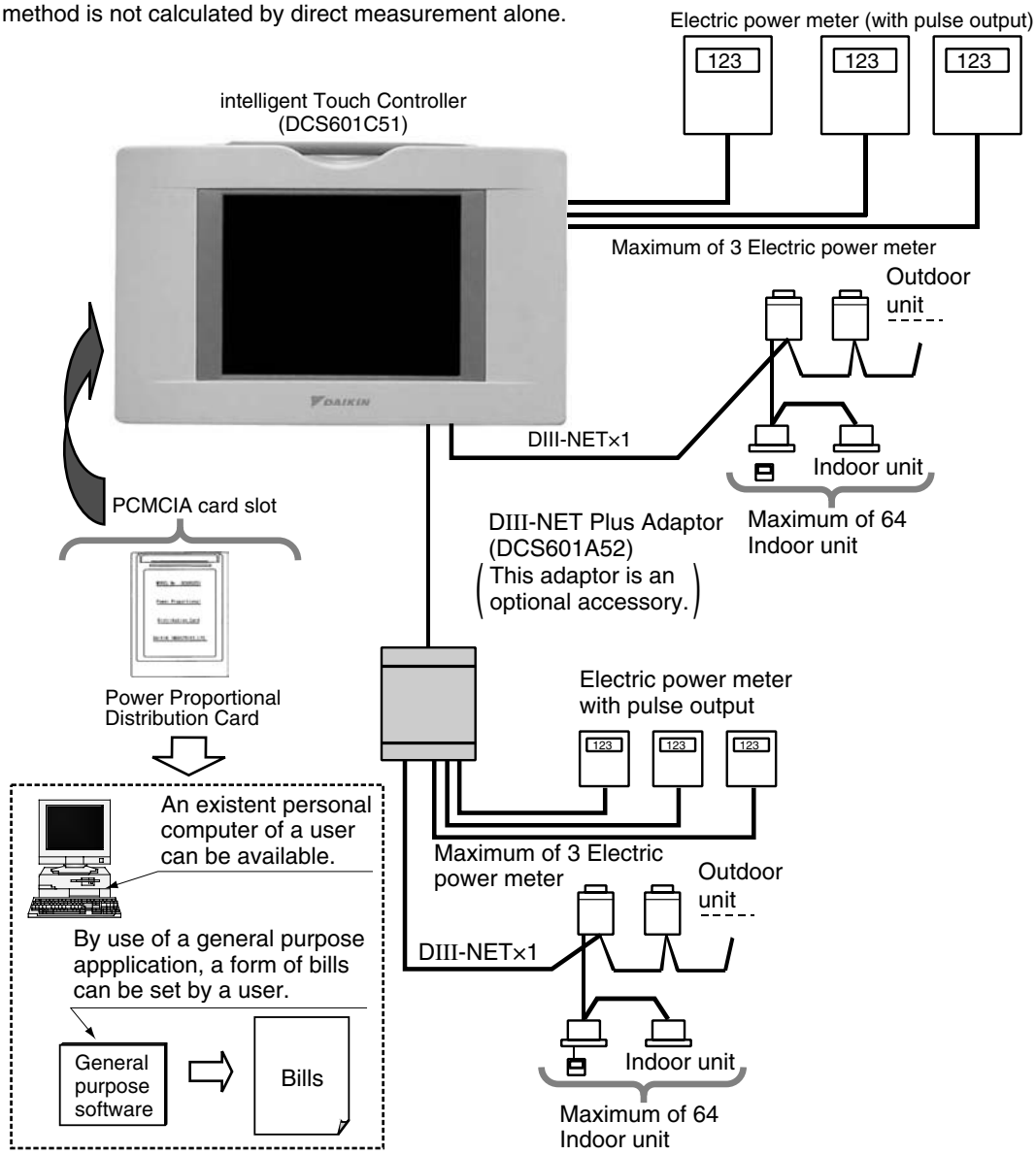

EM04A056

14

Checking Attachments

Power Proportional Distribution Card includes the following attachments.

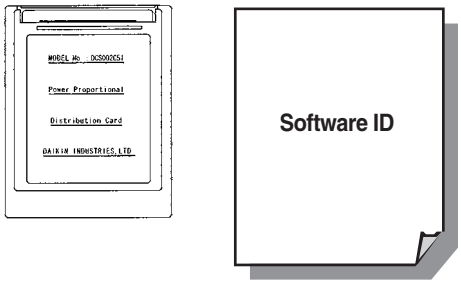

EM04A056

How to Connect

To activate the power proportional distribution function, it is necessary to set the program by use of the attached PCMCIA card and carry out a trial operation.
Before use, consult your supplier.

EM04A056

4.7.11 <DCS004A51> Web Software

Functions and Outline

Using this software enables you to operate and monitor air conditioners linked to the intelligent Touch Controller on the Windows PC, which is connected with the intelligent Touch Controller and the Ethernet communication (LAN).

* The intelligent Touch Controller functions as a Web server to visit the Website of the intelligent Touch Controller through the Internet Explorer, which is incorporated in the PC like as its standard software, thus making it possible to operate and monitor the air conditioners.

Furthermore, through the use of a mail server, if a malfunction occurs in any of the air conditioners which are linked to the intelligent Touch Controller, it will be able to transmit mails to a pre-assigned address to alert you to the malfunction.

For further information, contact our sales representatives.

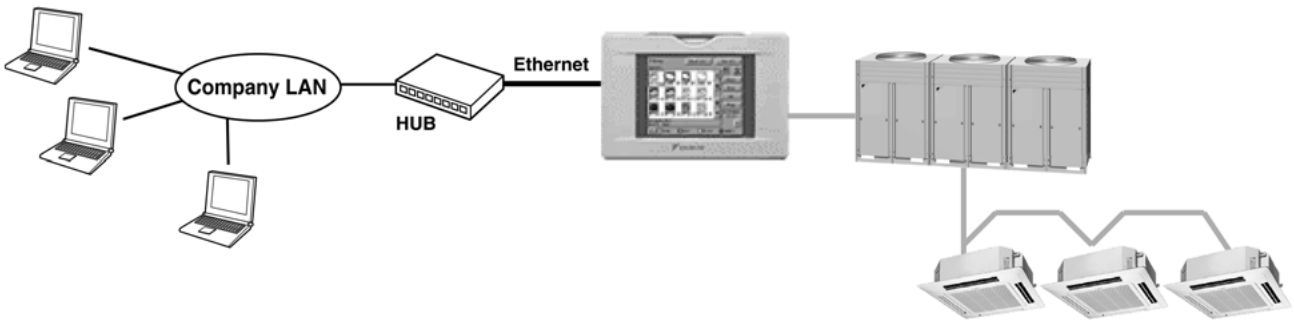

Web Interface of the intelligent Touch Controller

Permissions: Privileges Given to Each Login Name

There are two categories of login users: General User who can perform basic operations via the web interface and Administrator who can setup the system and change system settings.

Two Display Modes

You can select the display mode from two modes during login process: the Basic mode which provides a simple and easy-to-use interface and the Advanced mode which allows you to use advanced setting options.

Start/Stop Operation

You can start or stop all the devices in a group, a zone, or multiple zones at a time.

Advanced Settings for Air Conditioners

You can set temperature, operation modes, direction of air flow, air volume, and remote controller mode of all devices in a group, a zone, or multiple zones.

Various Operation Modes

You can operate devices from a web interface, the intelligent Touch Controller console, or a local remote controller. Also the Administrator can permit or prohibit remote controller operations of devices in a specified group or zone using the web interface.

User Administration

The Administrator can register or delete General Users, who can operate air conditioners via the web interface, and set/change his/her own password and General Users' password.

Scheduling Function

The Administrator can precisely schedule operations for a specific group or zone of devices. Weekly schedule and 10 extra schedules can be created.

EM04A057

4.7.12 <KJB411A> Optional Switch Box

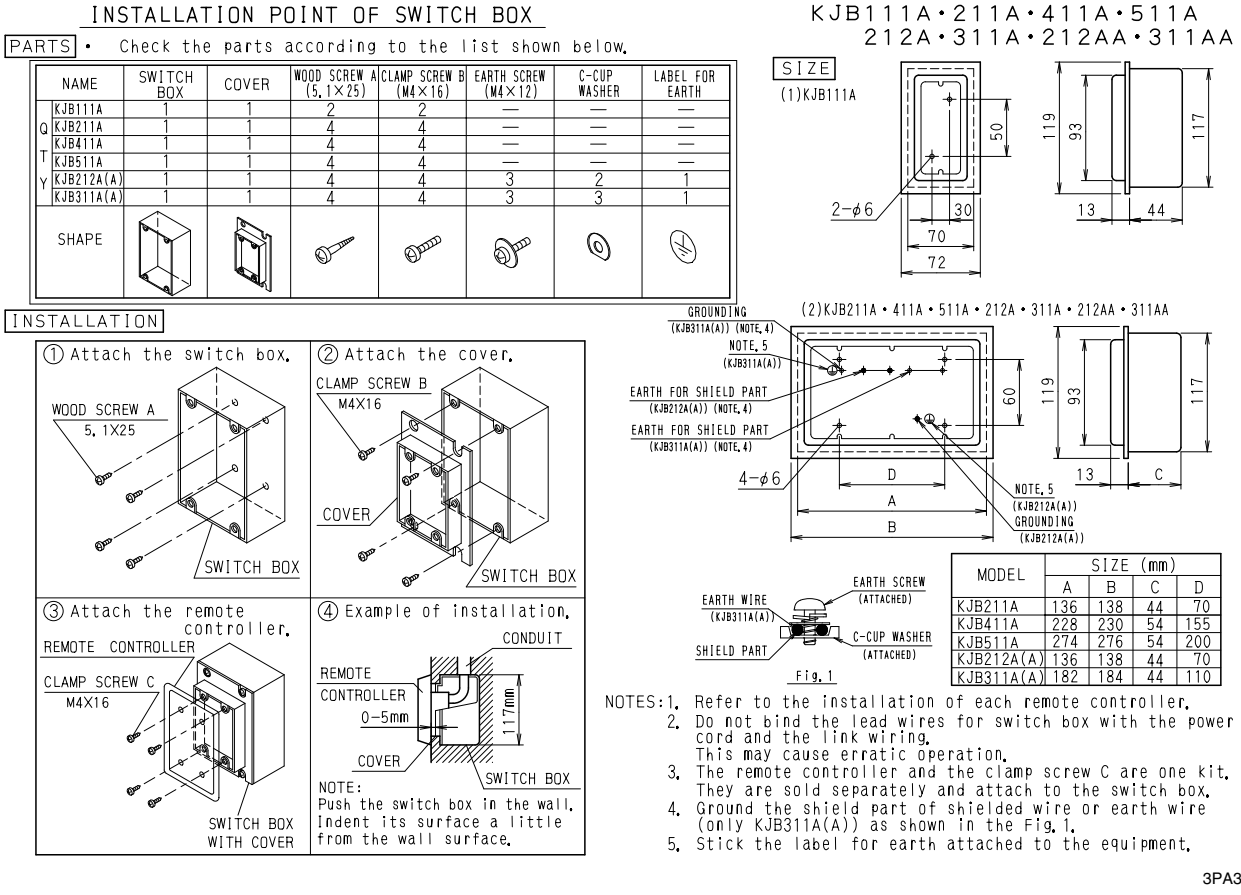

3PA34878C

4.8 <BRC1D61> Wired Remote Controller with Weekly Schedule Timer

Adds new, advanced functions to those of the wired remote controller..



BRC1D61

- 24-hour clock function (1-hour backup for power failures).
- Programming function for each day of week.
- Scheduling possible of start/stop and temperature limit (5 settings/day).
- Programming can be enabled or disabled.
- Copy function for programmed schedules.

4.8.1 Dimension

Wired Remote Controller with Weekly Schedule Timer BRC1D61

Unit (mm)

• REMOTE CONTROLLER DIMENSIONS

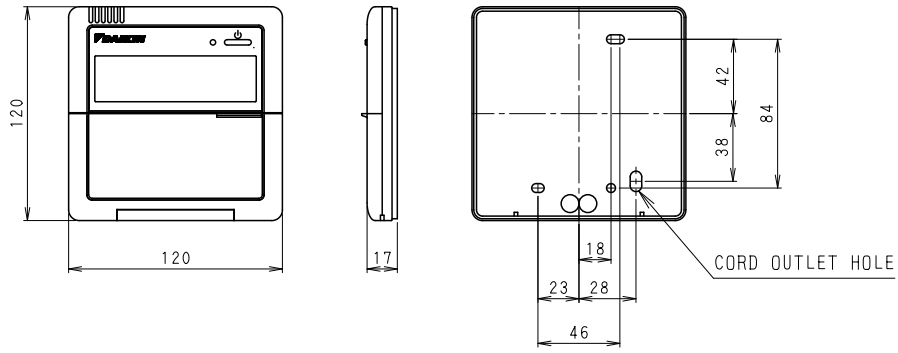

• INSTALLATION METHOD

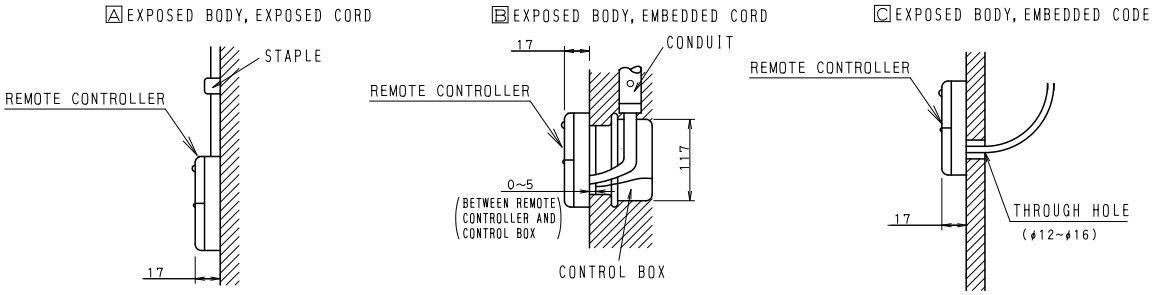

NOTE)1. REMOTE CONTROLLER CORD AND STAPLE ARE NOT ATTACHED. THEY ARE FIELD SUPPLIED PARTS.

• SPECIFICATIONS OF CORD

	FOR AUSTRALIA	FOR OTHER COUNTRIES
TYPE	SHIELD WIRE (INSULATED THICKNESS:1mm OR MORE)	VINYL CORD WITH SHEATH OR CABLE (INSULATED THICKNESS:1mm OR MORE)
SIZE	0.75~1.25mm²	
TOTAL LENGTH	500m	

3D048117

4.8.2 Features and Functions

The BRC1D61 is a state of the art remote controller that offers full control over your installation.

1 BASIC REMOTE CONTROLLER

The basic remote controller functions are:
- ON/OFF,
- operation mode change-over,
- temperature adjustment,
- air volume adjustment
- air flow direction adjustment.

2 CLOCK FUNCTION

The clock functions are:
- 24 hours real time clock,
- day of the week indicator.

3 SCHEDULE TIMER FUNCTION

The schedule timer functions are:
- a maximum of 5 actions can be programmed for each day of the week (totalling 35 actions),
- schedule timer can be enabled/disabled at any time,
- linked to a set temperature or a LIMIT operation or an OFF operation,
- "last command" overrules previous command until next scheduled command.

4 LIMIT OPERATION

Limit operation provides thermostat control within the range of the set minimum and maximum temperature.
The minimum temperature setting will trigger heating, the maximum temperature setting will trigger cooling.

5 LEAVE HOME

The leave home function prevents the room temperature from dropping when the occupants are out for a longer period. If the room temperature drops below 10°C, heating is started automatically. As soon as 15°C is reached, the controller returns to its original status.

6 BUTTON PERMISSION LEVEL

Three hierarchical permission levels can be set to limit the user action.

3P107422-3D

14

4.8.3 Names and Functions

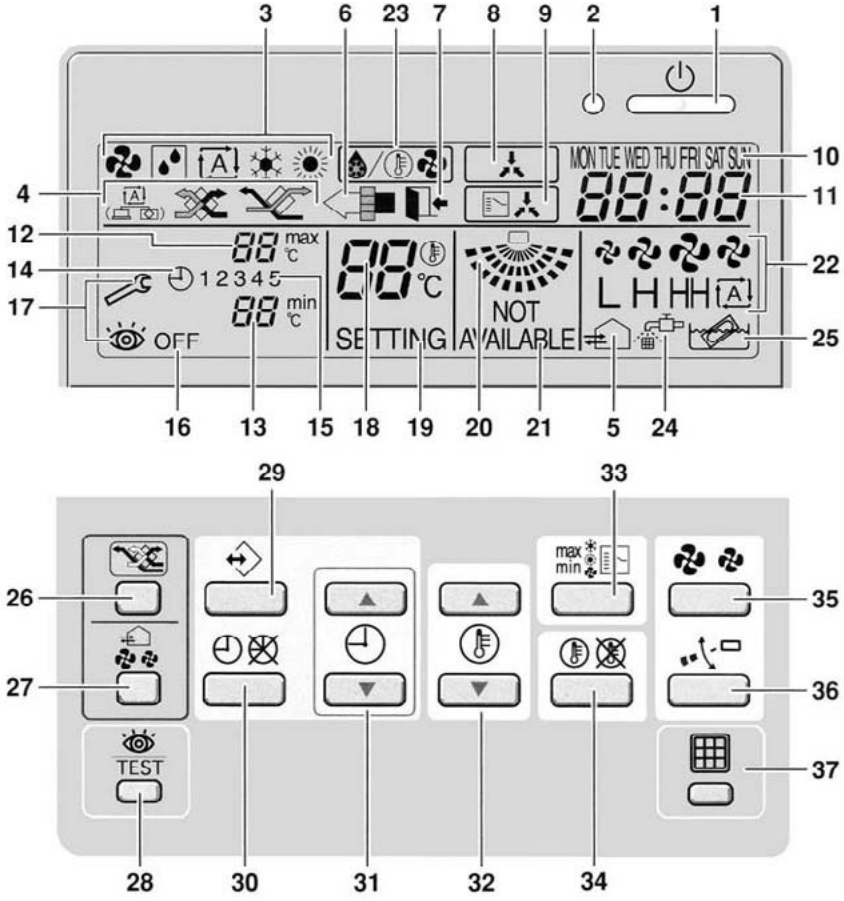

Figure 1

3P107422-3D

4.8.4 Name and Function of Switches and Icons (Refer to figure 1)

1 ON/OFF BUTTON

Press the ON/OFF button to start or stop the system.

2 OPERATION LAMP ○

The operation lamp lights up during operation or blinks if a malfunction occurs.

3 OPERATION MODE ICON

These icons indicate the current operation mode (FAN, DRY, AUTOMATIC, COOLING, HEATING).

4 VENTILATION MODE ICON

These icons indicate the current ventilation mode (HRV only) (AUTOMATIC, HEAT EXCHANGE, BYPASS).

5 VENTILATION ICON

The ventilation icon appears when the ventilation is adjusted with the ventilation amount button (HRV only). Simultaneously, the ventilation amount is indicated by the fan speed icon (see 22).

6 AIR CLEANING ICON

This icon indicates that the air cleaning unit (option) is operational.

7 LEAVE HOME ICON

The leave home icon shows the status of the leave home function.

ON	Leave home is enabled
FLASHING	Leave home is active
OFF	Leave home is disabled

8 EXTERNAL CONTROL ICON

This icon indicates that another controller with higher priority is controlling or disabling your installation.

9 CHANGE-OVER UNDER CENTRALISED CONTROL ICON

This icon indicates that the change-over of the installation is under centralised control assigned to another indoor unit or optional cool/heat selector connected to the outdoor unit (= master remote controller).

10 DAY OF THE WEEK INDICATOR

MON TUE WED THU FRI SAT SUN

The day of the week indicator shows the current week day (or the set day when reading or programming the schedule timer).

11 CLOCK DISPLAY 88:88

The clock display indicates the current time (or the action time when reading or programming the schedule timer).

12 MAXIMUM SET TEMPERATURE 88 max °C

The maximum set temperature indicates the maximum set temperature when in limit operation.

13 MINIMUM SET TEMPERATURE 88 min °C

The minimum set temperature indicates the minimum set temperature when in limit operation.

14 SCHEDULE TIMER ICON

This icon indicates that the schedule timer is enabled.

15 ACTION ICONS 1 2 3 4 5

These icons indicate the actions for each day of the schedule timer.

16 OFF ICON OFF

This icon indicates that the OFF action is selected when programming the schedule timer.

17 INSPECTION REQUIRED and

These icons indicate that inspection is required. Consult your installer.

18 SET TEMPERATURE DISPLAY 88 °C

This indicates the current set temperature of the installation (not shown in LIMIT operation or in FAN or DRY mode).

19 SETTING SETTING

Not used, for service purposes only.

20 AIR FLOW DIRECTION ICON

This icon indicates the air flow direction (only for installations with motorised air flow flaps).

21 NOT AVAILABLE NOT AVAILABLE

NOT AVAILABLE is displayed whenever a non-installed option is addressed or a function is not available.

22 FAN SPEED ICON L H HH A

This icon indicates the set fan speed.

23 DEFROST/HOTSTART MODE ICON

This icon indicates that the defrost/hotstart mode is active.

24 AIR FILTER CLEANING TIME ICON

This icon indicates the air filter must be cleaned. Refer to the manual of the indoor unit.

25 ELEMENT CLEANING TIME ICON

This icon indicates the element must be cleaned (HRV only).

26 VENTILATION MODE BUTTON

The ventilation mode button operates the HRV ; refer to the HRV manual for more details.

3P107422-3D

14

27 VENTILATION AMOUNT BUTTON

This button sets the ventilation amount; refer to the HRV manual for more details.

28 INSPECTION/TEST OPERATION BUTTON TEST

Not used, for service purposes only.

29 PROGRAMMING BUTTON

This button is a multi-purpose button.

Depending on the previous manipulations of the user, the programming button can have various functions.

30 SCHEDULE TIMER BUTTON

This button enables or disables the schedule timer.

31 TIME ADJUST BUTTON

These buttons are used to adjust the clock or, when in programming mode, to adjust the programmed action time. Both buttons have an auto-repeat function.

32 TEMPERATURE ADJUST BUTTONS

These buttons are used to adjust the current setpoint or, when in programming mode, to adjust the programmed setpoint temperature (step = 1°C). Both buttons are also used to adjust the day of the week.

33 OPERATION CHANGE/MIN-MAX BUTTON

max min

This button is a multi-purpose button. Depending on the previous manipulations of the user, it can have following functions:

1 select the operation mode of the installation (FAN, DRY, AUTOMATIC, COOLING, HEATING)

2 toggle between minimum temperature and maximum temperature when in limit operation

34 SETPOINT/LIMIT BUTTON

This button toggles between setpoint, limit operation or OFF (programming mode only).

35 FAN SPEED BUTTON

This button toggles between L (Low), H (High), HH (very High), A (Automatic).

36 AIR FLOW DIRECTION ADJUST BUTTON

This button enables to adjust the air flow direction.

37 AIR FILTER CLEANING TIME ICON RESET BUTTON

This button is used to reset the air filter cleaning time icon.

3P107422-3D

4.8.5 Installation

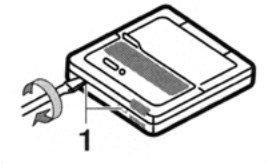

1

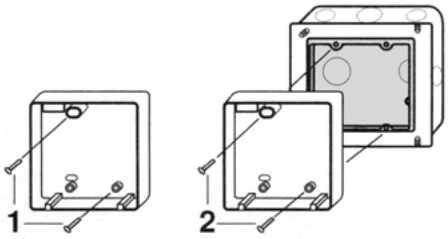

2

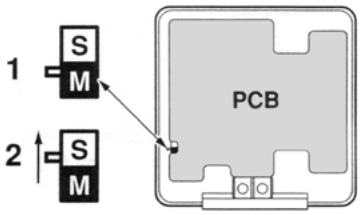

3

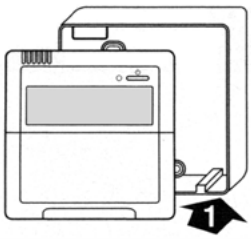

4

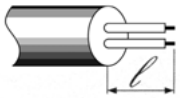

5

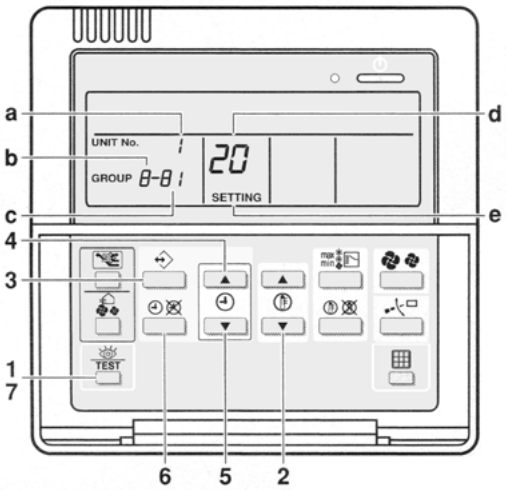

7

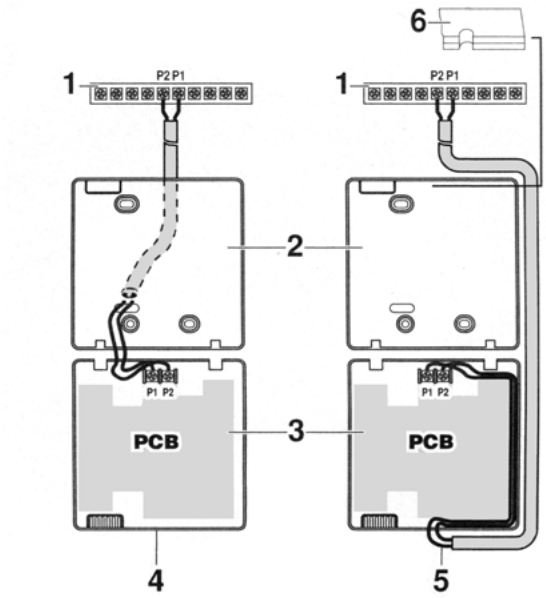

6

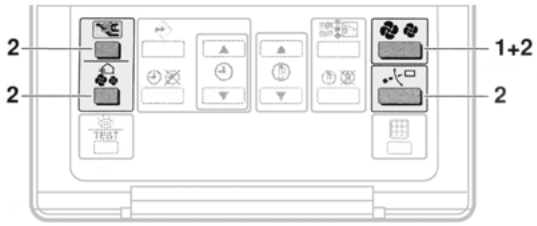

8

14

3P107422-4D

The kit includes the following parts:

Remote controller	Wood screws
	

Wall plugs	Machine screws
	

1. Remove the upper part of remote controller (Refer to figure 1)

Insert a minus screwdriver into the slots (1) in the lower part of the remote controller (2 places), and remove the upper part of the remote controller.

The PC board is mounted in the upper part of the remote controller. Be careful not to damage the board with the minus screwdriver.

2. Fasten the remote controller (Refer to figure 2)

1 for exposed mounting, fasten with the two included wood screws (Ø4x30) and plugs.

2 for flush-mounting, fasten with the two included machine screws (M4x16).

For the field supplied switch box, use optional accessory KJB111A or KJB211A.

NOTE Choose the flattest place possible for the mounting surface. Be careful not to distort the shape of the lower part of the remote controller by overtightening the mounting screws.

3. Wire the indoor unit (Refer to figure 6)

1 indoor unit

2 lower part of the remote controller

3 upper part of the remote controller

4 wired from the rear

5 wired from the top

6 notch the part for the wiring to pass through with nippers, etc.

Connect the terminals on top of the upper part of the remote controller (P1, P2), and the terminals of the indoor unit (P1, P2). (P1 and P2 do not have polarity.)

NOTE When wiring, run the wiring away from the power supply wiring in order to avoid receiving electric noise (external noise).

Wiring specifications

Wiring type	Size
2 wire	0.75–1.25 mm^2

NOTE Peel the shield for the part that has to pass through the inside of the remote controller case (⁄). Refer to figure 5.

4. Reattach the upper part of the remote controller

Be careful not to pinch the wiring when attaching.

Refer to figure 4:

First begin fitting from the clips at the bottom.

NOTE
1. The switch box and wiring for connection are not included.
2. Do not directly touch the PC board with your hand.

If controlling one indoor unit or one group of indoor units with two remote controllers

Change the MAIN/SUB changeover switch setting as described below (Refer to figure 3).

1 Main remote controller (factory set)

2 Sub remote controller

Set one remote controller to "main", and the other to "sub".

NOTE
1. If controlling with one remote controller, be sure to set it to "main".
2. Set the remote controller before turning the power supply on.

"88" is displayed for about one minute when the power supply is turned on. During this time the remote controller can not be operated.

3P107422-4D

5. Permission level function

■ If required, you can limit the user action by restricting the number of operable buttons. Refer to the chapter "Field settings".

Level	Operable buttons
1	All
2	• on/off button • schedule timer button • temperature adjust button • operation change/MIN-MAX button • fan speed button • air flow direction adjust button
3	• on/off button • temperature adjust button • fan speed button

■ For switching between level 1 permission and the selected level in service, proceed as follows:

1 Keep the fan speed button " " pressed,

2 and press the 3 other indicated keys simultaneously while keeping the fan speed button " " pressed.

Refer to figure 8.

■ If you want to limit the user action on the remote controller to be defined as "sub", start with only connecting this controller to the unit. Make sure that this controller is set to "main" (factory set) first, change the permission level to the setting you prefer and only then set the remote controller to "sub".
You can now proceed with connecting the remote controller to be defined as "main".

6. Field settings

If optional accessories are mounted on the indoor unit, the indoor unit setting may have to be changed. Refer to the instruction manual for each optional accessory.

Refer to figure 7.

a Unit NO
b First Code NO
c Second Code NO
d Mode NO
e Field set mode

Procedure (Refer to figure 7)

1 When in the normal mode, press the " TEST " button for a minimum of four seconds, and the FIELD SET MODE is entered.

2 Select the desired MODE NO. with the " " button.

3 During group control, when setting by each indoor unit (mode No. 20, 21, 22 and 23 have been selected), push the " " button and select the INDOOR UNIT NO. to be set. (This operation is unnecessary when setting by group.)

4 Push the " " upper button and select FIRST CODE NO.

5 Push the " " lower button and select the SECOND CODE NO.

6 Push the " " button once and the present settings are SET.

7 Push the " TEST " button to return to the NORMAL MODE.

Example

If during group setting and the time to clean the air filter is set to FILTER CONTAMINATION - HEAVY, SET MODE NO. to "10", FIRST CODE NO. to "0", and SECOND CODE NO. to "02".

NOTE

1. Setting is carried out in the group mode, however, if the mode number inside the parentheses is selected, indoor units can also be set individually.
2. The SECOND CODE number is set to "01" when shipped from the factory.
3. Do not make any settings not given in the table.
4. Not displayed if the indoor unit is not equipped with that function.
5. When returning to the normal mode, "88" may be displayed in the LCD in order for the remote controller to initialize itself.
6. It is not possible to change field settings on the remote controller that is set to "sub".

3P107422-4D

14

Mode No. Note 1	FIRST CODE NO.	Description of setting		SECOND CODE NO. Note 2			
				01	02	03	04
10(20)	0	Filter Contamination - Heavy/Light (Setting for spacing time of display time to clean air filter) (Setting for when filter contamination is heavy, and spacing time of display time to clean air filter is to be halved)	Ultra long life filter	Light: Approx. 10.000 hrs.	Heavy: Approx. 5.000 hrs.	—	—
			Long life filter	Light: Approx. 2.500 hrs.	Heavy: Approx. 1.250 hrs.		
			Standard filter	Light: Approx. 200 hrs.	Heavy: Approx. 100 hrs.		
	1	Long-life filter type (setting of filter sign indication time). (Change setting when ultra-long filter is installed)		Long-life filter	Ultra-long life filter	—	—
	2	Thermostat sensor in remote controller		Use	Not use	—	—
	3	Spacing time of display time to clean air filter count (setting for when the filter sign is not to be displayed)		Display	Do not display	—	—
11(21)	0	Setting number of connected Sky Air simultaneous operation system indoor units (setting for simultaneous operations system)		Pair	Twin	Triple	Double twin
12(22)	1	ON/OFF input from outside (setting for when forced ON/OFF is to be operated from outside).		Forced OFF	ON/OFF operation	—	—
	2	Thermostat differential changeover (setting for when using remote sensor).		1°C	0.5°C	—	—
13(23)	0	High air outlet velocity (for high ceiling applications).		≤2.7 m	>2.7≤3.0 m	>3.0≤3.5 m	—
	1	Selection of air flow direction (setting for when a blocking pad kit has been installed).		4-way flow	3-way flow	2-way flow	—
	3	Selection of air flow function (setting for when using a decoration panel for outlet).		Equipped	Not equipped	—	—
	4	Air flow direction range setting.		Upper	Normal	Lower	—
	6	Setting the external static pressure (setting according to the connected duct resistance) (for FHYK, follow the high ceiling setting)		Normal (Normal)	High static pressure (High ceiling)	Low static pressure —	—
15(25)	3	Drain pump operation with humidifying.		Equipped	Not equipped	—	—
1b	0	Permission level setting		Level 2	Level 3	—	—
	1	Leave home function		Not permitted	Permitted	—	—
	2	Thermostat sensor in remote controller (for limit operation and leave home function only)		Use	Not use	—	—

3P107422-4D

4.9 <DAM602B51 / DAM602B52> Intelligent Manager III

Even if an air conditioning system possesses an excellent energy efficient profile, this is meaningless unless its operation is appropriately managed. Precise operation management is the key to getting the most out of an energy efficient system. The intelligent Manager II is Daikin's energy-efficient air conditioning management system. It maximizes the performance and characteristics of air conditioning systems and further improves upon existing energy efficiency. What we have prepared for you is a highly sophisticated that only Daikin, the air conditioning specialist, could have made possible.

Functions and System



Monitoring
- Operation / Stopped
- Operation mode, filter sign, Set point, Fan speed, etc
- Abnormality
  Malfunction / Communication Error /etc.
- Air-Conditioning Network Service System (Optional Maintenance Service)

Operation (individual / group)
- Start / Stop
- Setting
  (Operation mode / Fan speed / Remote Ctrl mode / Maintenance mode / Filter sign clear / Fan direction)
- Set Point etc.

Start
Stop

Indication
- Manage group (Cell display)
- Control group (Cell display)
- **Visual Navigation (Graphical display)**
- Table

Measurement
- Accurate operate time
- Number of switching times
- Consumption power
- Room temperature
- Outdoor temperature

Temp. 28.0 °C
Setup 27 °C

Data indication
- Table (Op.time, sw. times)
- **Graph (temperature)**

Printing
- History
- Statistics
- Setting info.
  (Schedule / Interlocking / User Info / Status table, etc)

Automatic Controls
- Schedulel
- Interlocking
  (standard / Emergency stopr)
- **Eco Mode**
- **Power Limit Control**
- **Auto change over**
- **Sliding temperature (External kit required)**
- **Temperature limit**
- Power Failure control

System Setting
- Basic Setup
  (Management Gr. Editing / Control Gr. Editing / User / History, Buzzer / Daylight saving time / Clock)

Remote Access
- **Remote connection**
- **WatchDOG**

Multiple Language
- English
- Italian
- Spanish
- French
- German
- Chinese

other
- Security (30 users Max / Flexible access Authority)
- History (realtime data / saved data)
- Set point limitation
- **Multiple PC (accessible from different PC's)**
- OnLine Help
- Compatibility with Windows 2000

Controlling Other Equipment

Effective control over Daikin central A/C system equipment.

A wide range of centralised control functions are supported for secondary air conditioning equipment compatible with D Ⅲ-net, including operation start/stop, airflow volume, and humidifier operation. With D Ⅲ-net compatible heat source equipment, full control over all functions, such as the energy conservation/power demand, is supported.


Central A/C System Control Screen

Effective control over peripheral equipment, such as pumps.

Using the optional Dio unit to make connections, it is possible to extend control to central A/C system equipment not compatible with D Ⅲ-net, as well as peripheral equipment such as water pumps and fans. This allows precise operation control using a single system.


Dio Unit


Heat Source System Control Screen

14

4.9.1 System Image

■ An Overview of the intelligent Manager III System

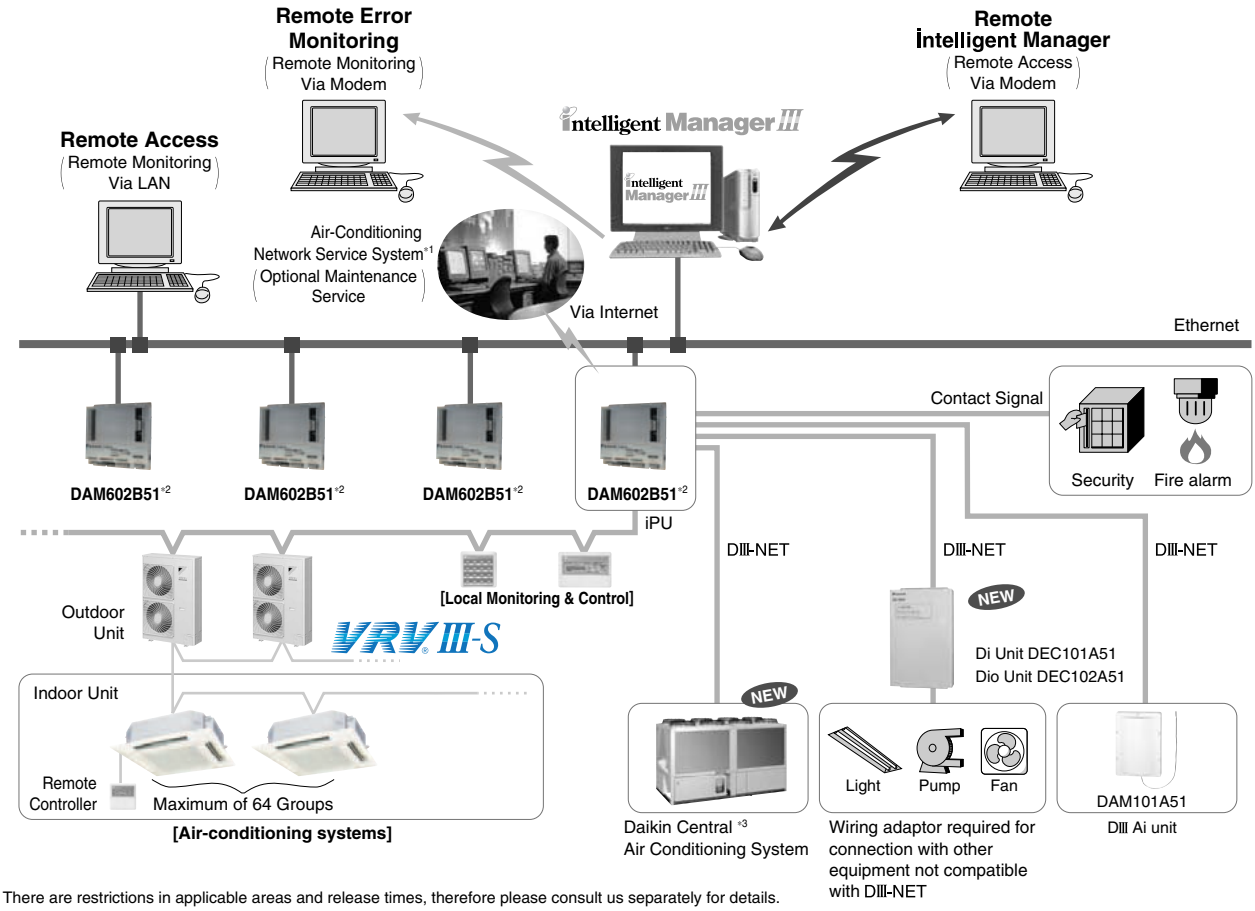

*1 There are restrictions in applicable areas and release times, therefore please consult us separately for details.
*2 Model no varies upon the system size.
*3 Interfacing requirements vary depending on model, and some systems may not be suitable. Please contact your distributor for details.

4.9.2 Series and Components

■ The intelligent Manager III Series and its Components

Products name ∗1	IM-128	IM-256	IM-512	IM-768	IM-1024
Max number indoor units	128	256	512	768	1024
Max number outdoor units	20	40	80	120	160
PC, UPS, etc.	Local Procurement				
Hardware model name ∗2	DAM602B52	DAM602B51×1	DAM602B51×2	DAM602B51×3	DAM602B51×4
PPD (Power Proportional Distribution) ∗3	Yes ∗2				

∗1 Products name is recognized as an order number. This includes hardware, software and field engineering work as a package.
∗2 kWh meters to be locally supplied.
∗3 With the PPD system, data is transferred from the indoor units and compared with reference data on the standard power consumption of air conditioning equipment under normal conditions.
The results are used to estimate the power consumption of each indoor unit. Note, however, that this measurement method is exclusive to Daikin and has no legal basis.

4.9.3 Wiring Image

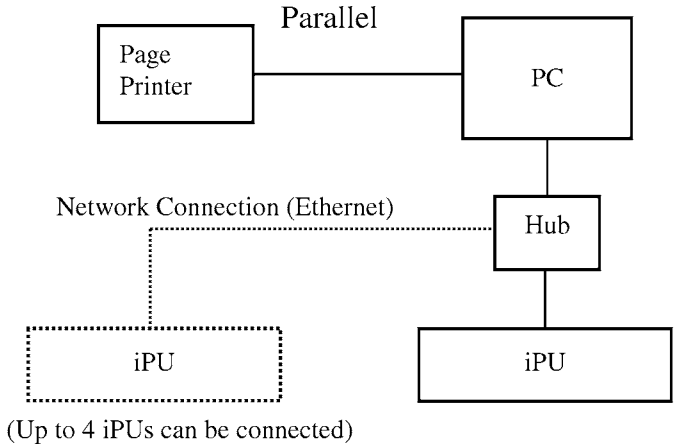

<Use of Printers>

1. Standard Setting: With only the page printer: Parallel port connection
   - Printing of daily, monthly, annual reports and cost calculations: Automatically prints at the set time
   - Display of errors and changes of states etc.: Printer at error or at determined build up of data, or freely.

2. 2 Units of Page Printer and Line Printer (Optional)
   * Page printer: Network connection
   - Daily, monthly, annual reports: Automatically prints at the set time
   - Cost calculation

Connecting to iPU

Wiring varies according to the equipment to be connected, as shown below.

* DIII-NET Compatible Air Conditioners

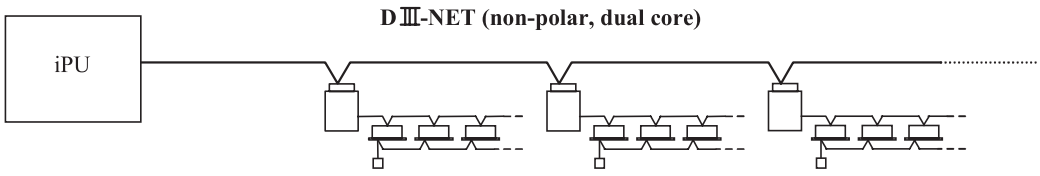

Per 1 DⅢ-NET line:
Up to 10 outdoor units
Up to 64 indoor units

14

(1) Bus Method

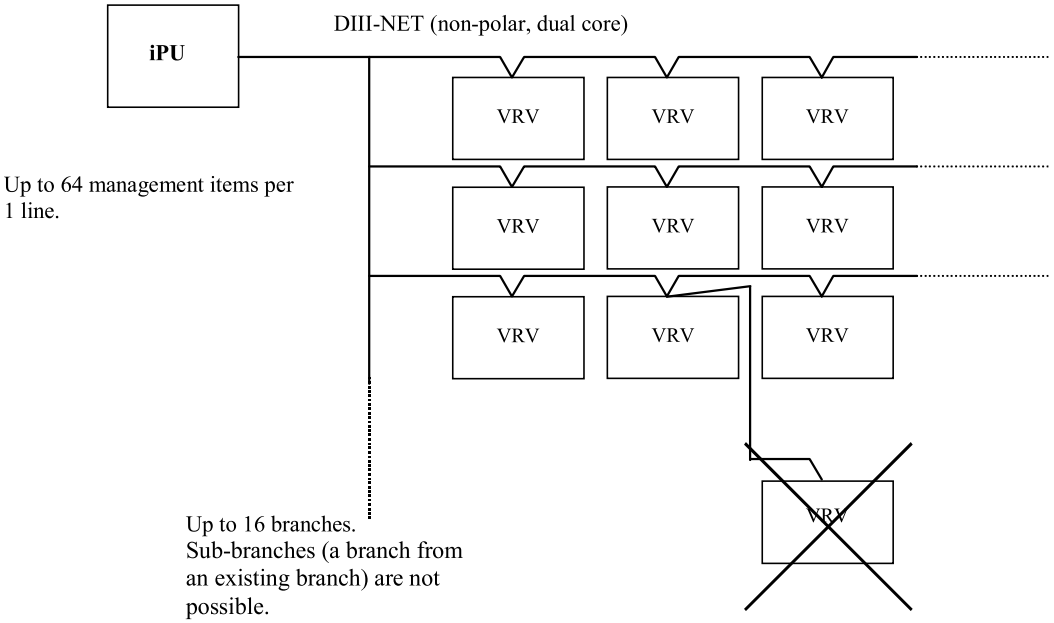

(2) Star Method

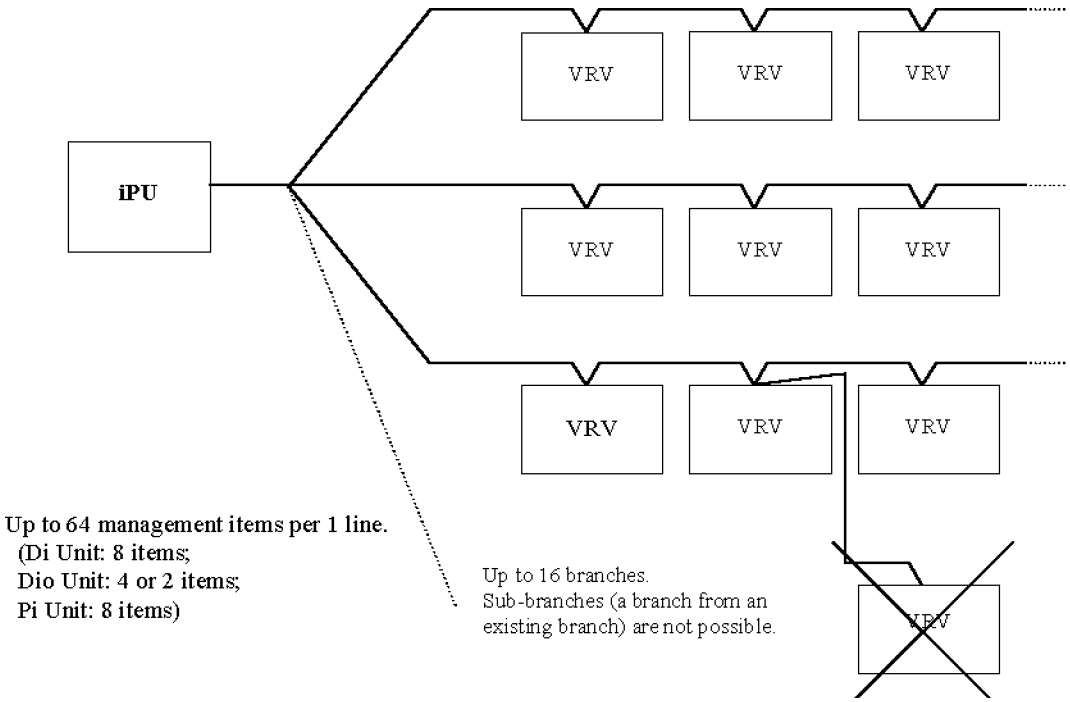

4.9.4 Wiring Diagram

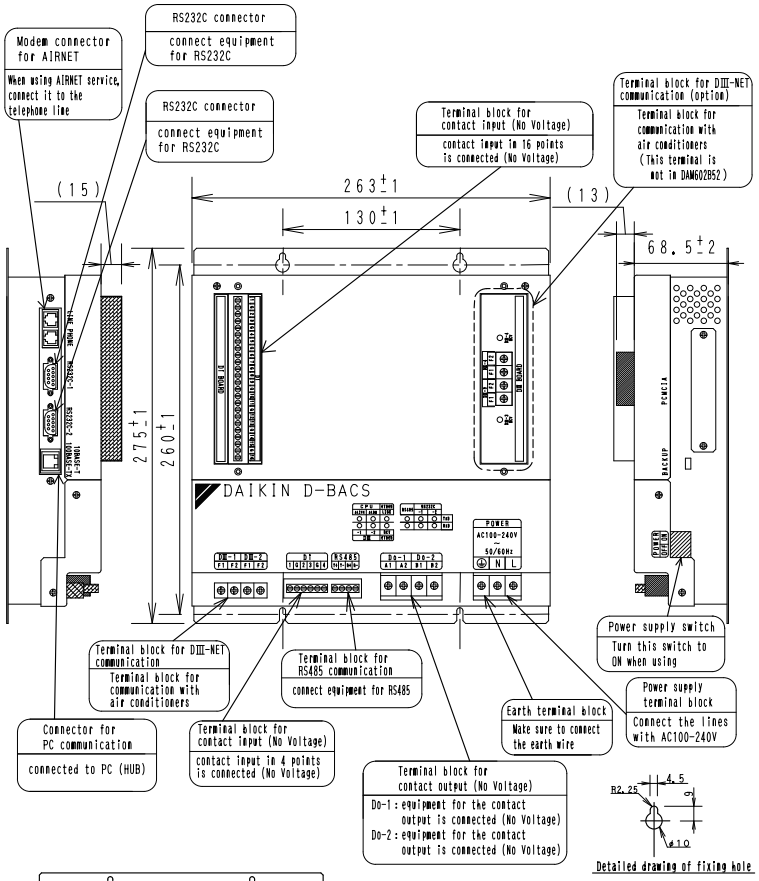

1P177851A

14

Required Installation Space

Keep the minimum amount of space indicated in the below drawing from walls, and between units when installed in series.

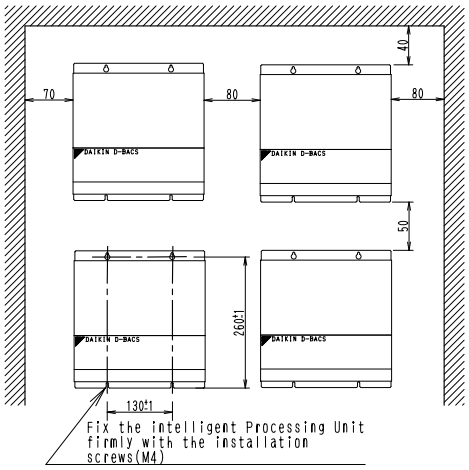

1P177851A

4.9.5 Electric Wiring Connection

Don't fail to turn OFF the indoor unit power switch before installing Intelligent Processing Unit.
Failure to observe this instruction could result in electric shock.

■Everything relating with field wiring must be supplied in the field.

● DⅢ-NET wiring

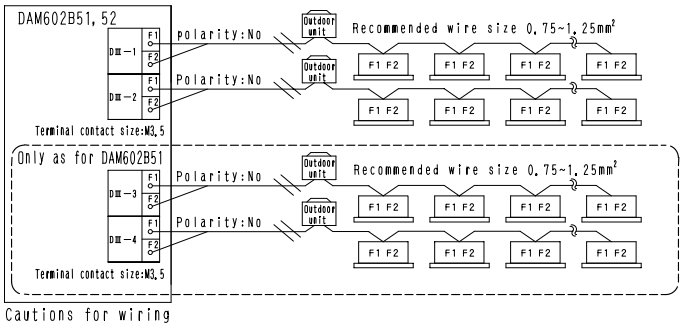

Cautions for wiring

1. Do not use multicore cables with three or more cores
2. Use wires of sizes between 0.75mm² and 1.25mm²
3. Do not bind the wire for DⅢ-NET
4. Wirings for DⅢ-NET must be isolated from the power lines
5. Wire length:Max 1000m

● No voltage contact input wiring

● Di wiring

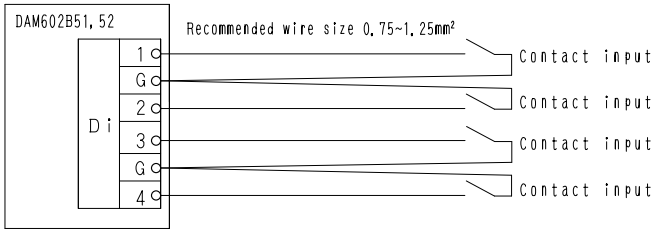

● Di BOARD wiring

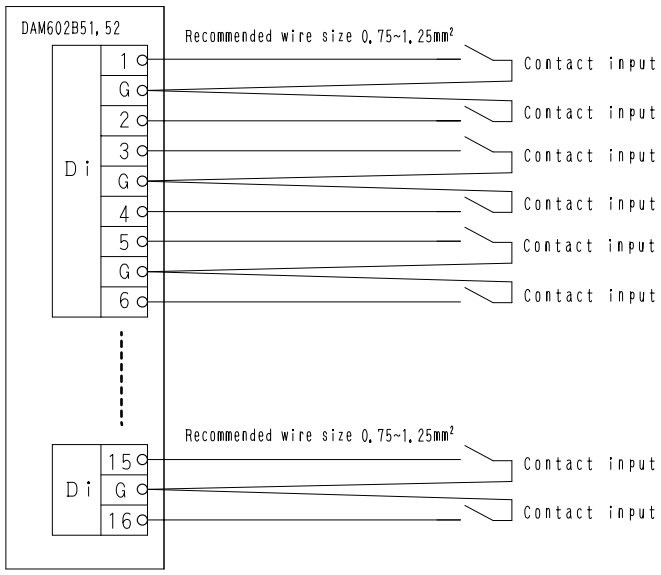

Cautions for wiring

1. The input are all the no voltage contact
2. Use a contact which can guarantee minimum application load DC16V and 10mA
3. Do not use multicore cables with three or more cores
4. Use wires of sizes between 0.75mm² and 1.25mm²
5. Do not bind the wire for control
6. Wirings for control must be isolated from the power lines
7. Terminals G are inter-connected. Connecting to either one is allowed, but the number of cables connectable to one terminal is limited to 2 pieces
8. Wire length:Max 150m
9. Terminal Screw : Flat-blade screw (Do not use Phillips screwdriver)
   Acceptable recommendation tool : Flat-blade screwdriver
   (width : 3mm
   thickness : 0.5mm)

1P177853

14

● No voltage contact output wiring

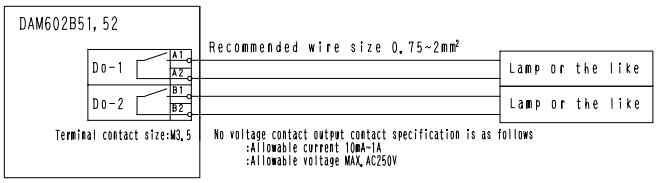

Cautions for wiring

1. Do not use multicore cables with three or more cores
2. Use wires of sizes between 0.75mm² and 2mm²
3. Do not bind the wire for control
4. Wirings for control must be isolated from the power lines
5. Wire length:Max 150m

● Connection to public telephone line

Connect to the telephone line in order to monitor the air-conditioner via AIRNET service.
Connect to modular cable from the public telephone line to the upper connector with a stamping of LINE, and connect the modular cable of the telephone to the lower connector with a stamping of PHONE, as shown in the sketch below.

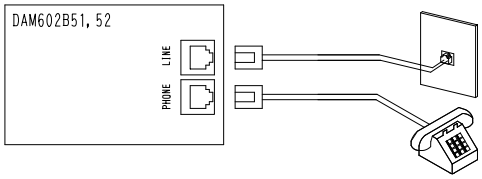

Cautions for wiring

1. Don't clamp these cables together with high voltage cables. Failure to observe this instruction would cause control error.
2. When using AIRNET service, it is necessary to use a separate modem specified by us and enter into Maintenance Agreement with charge.

● Ethernet communication wiring

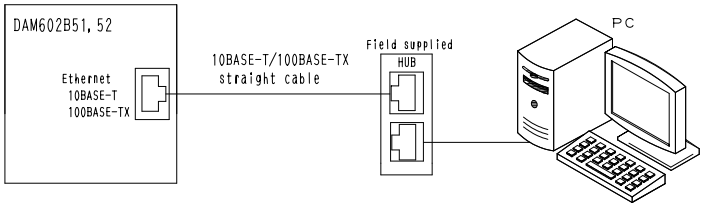

Cautions for wiring

Don't clamp these cables together with high voltage cables. Failure to observe this instruction would cause control error.

1P177853

4.9.6 System Architecture

■ **Requirement Spec and the Recommendation of Other Equipment**

System Diagram

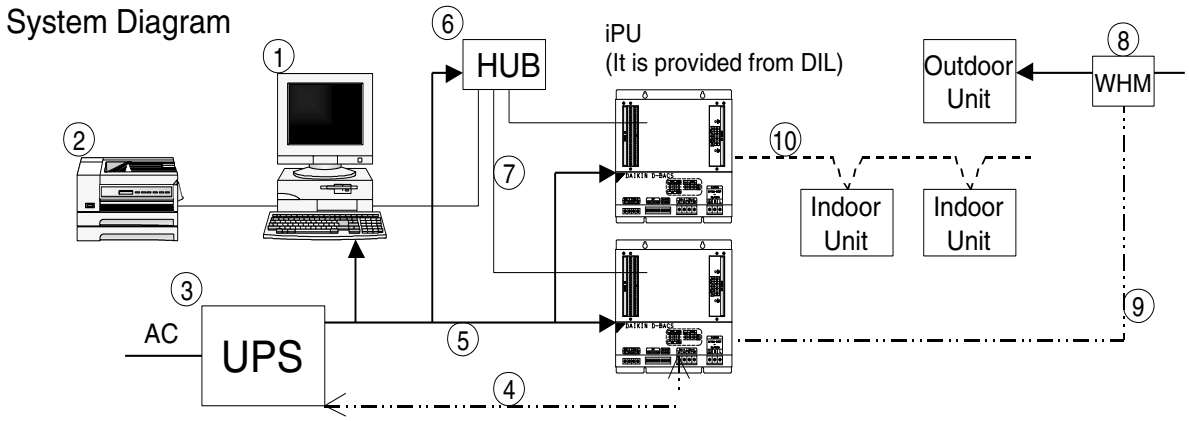

	Requirement Specifications	Recommendations	Remarks
PC ① ②	[Hardware] CPU : Pentium 300MHz minimum, 500MHz or above recommended Memory : 64MB or above HDD : 4GB minimum, 8GB or above Keybord/Mouse Network : 10Base/T SVGA (800×600) Monitor (15',17') Sound & Speaker [Software] Windows NT 4.0 (SP4) Windows 2000 Windows XP [Other equip.] LBP (not indispensable.) - It must be supported by WindowsNT. - Require A4 size paper	We recommend makers such as IBM, Compaq or Dell, etc. We recommend makers such as HP, Canon, etc.	In the case of an alternative maker, correct operation should be checked before shipment.
UPS ③ ④ ⑤	Capacity : 200-250W / 20min Voltage : as required on the field Control Signals - Power failure signal (from UPS) - UPS shutdown signal (to UPS) AC power lines	APC SU700, SU1000 Series + Relay I/O module(AP9610)	
Network Equip. ⑥ ⑦	Multi-port HUB (4 or more ports) 10Base/T cables (category 5) A required distance and a number	We recommend makers such as 3com, etc. The cable for networks is required.	Hub should be used even when one iPU is connected to PC.
WHM ⑧ ⑨	1pulse / 1kWh output is required. WHM - iPU connection cable	As specified in the D-BACS system design guide. • 1 pulse to 1kW or 10kW pulse width must be within 40-400m/sec. • Output relay must be mercury or electronic type only. • No voltage output.	Required for power-proportional-division.
other ⑩	D3network cables	As specified in the D-BACS system design guide.	

14

4.9.7 Functions

■ **Local Functions**

Item	Description
Monitoring	Operation status monitoring for a maximum of 1,024 indoor units(160 outdoor units), when 4 iPUs are connected;∗ Air Conditioning Network Service System: Air conditioner failure prediction (optional); Continuous operation time monitoring (per management point); Power failure monitoring
Control, Operation, and Settings	Login setting; Individual control; group switching/ setting of control group (200 groups); Schedule control (200 programs); Fire emergency stop control (32 programs); Power failure/ release control (selected from 5 power restoration modes); Air conditioner centralized control
Display	Management point name/icon/list display; Control group list display; Screen scroll function; Operation time display; Integrated switching number display; History display (malfunctions, alarms, control)
Measurements	Operation time integration; Switching number integration; Meter reading (through Pi port on iPU); Power proportional reading
Management	Operational history management; Generation of daily, monthly and yearly reports; VRV power proportional distribution
Data Storage/ Report	Print output; Data storage
Warning	Emergency signal input

∗If exceeding the stated number of outdoor units, DIII-NET Expander Adapter <DTA109A51> allows easy system connection as long as restrictions are observed.

4.9.8 Power Proportional Distribution

■ **Points to be noted for Power Proportional Distribution (PPD)**

When implementing PPD using i-touch-Controller and i-Manager, or in case of any mixture of heat recovery or energy saving type, please install a watt hour meter (WHM) in a separate system.

In addition, please calculate the proportional distribution for each VRV-series by setting power group during a test run.

i-Manager, i-touch-Controller (Max 3 WHM)

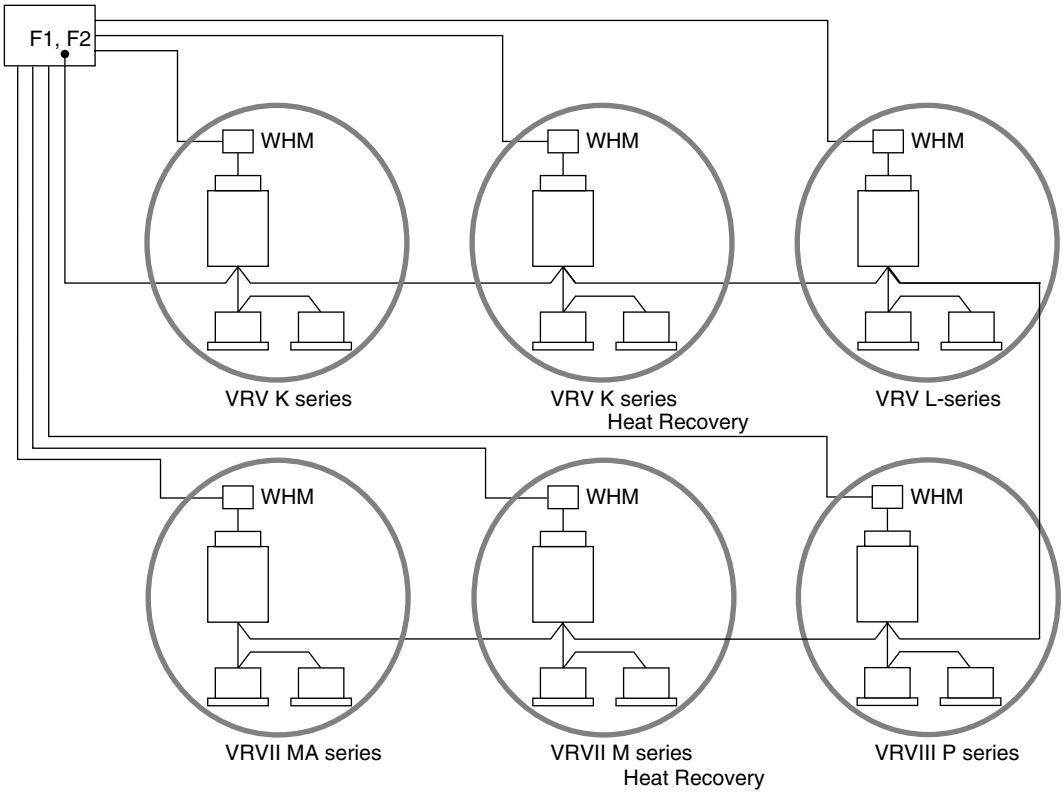

■ **Subject Model**

DCS601C51	intelligent touch Controller
DCS002C51	P.P.D. Card
DAM602B51, 52	intelligent Manager
DAM002A51	P.P.D Software for intelligent Manager

■ **Reason**

Such equipments as i-touch-Controller implementing PPD cannot distinguish heat recovery type from energy saving type to which they are connected. Therefore, if the capacity of each indoor unit is the same, the result of proportional distribution becomes the same as that of other VRV.

(No effect of energy saving is reflected on the calculation result.)

14

5. Adaptor

5.1 <DCS302A52> Unification Adaptor for Computerized Control

5.1.1 Function

When connected to the central remote controller, this kit enables unified display (operation/malfunction) and unified control (operation/stop).

1. Unified Display

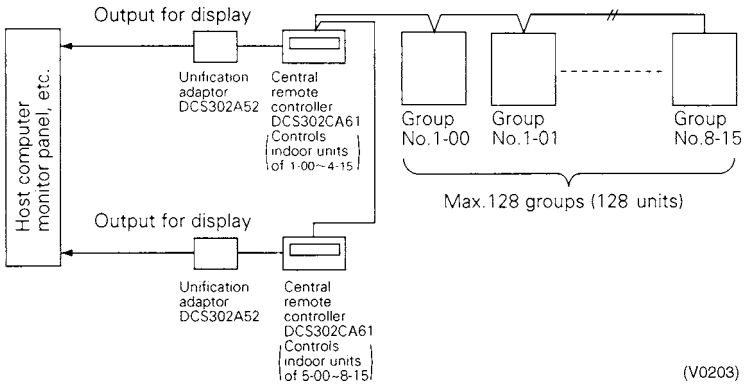

2. Unified Control

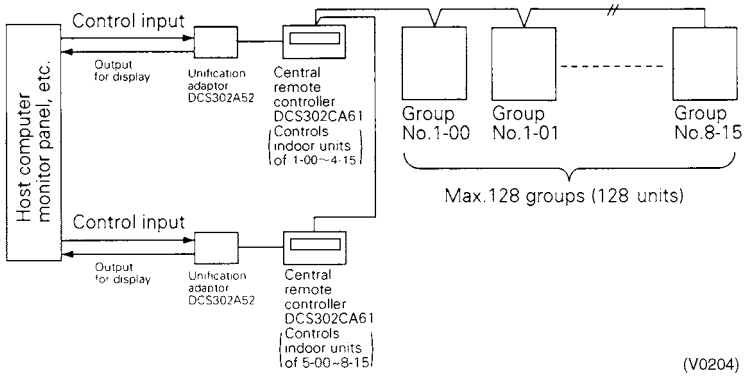

5.1.2 Names of Parts and Function

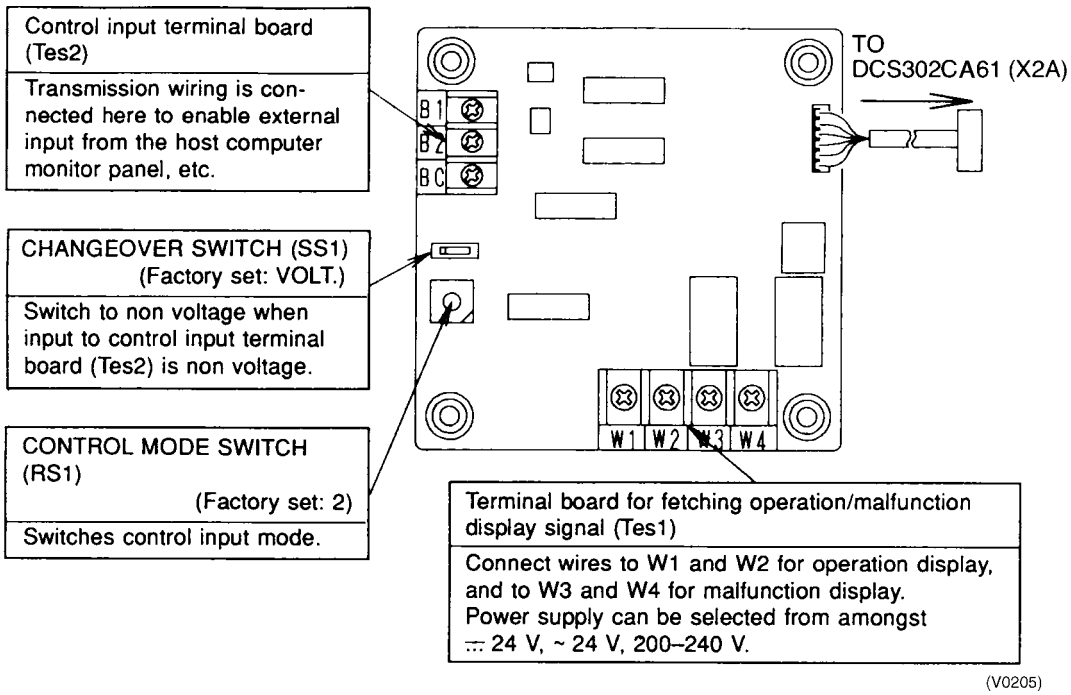

C : 2PA53489

5.1.3 Installation

- Securely install the adaptor inside the electric panel box (field supplied) with the 4 attached screws.
- Install the adaptor in a place within 5 m from the central remote controller to enable cable connection.

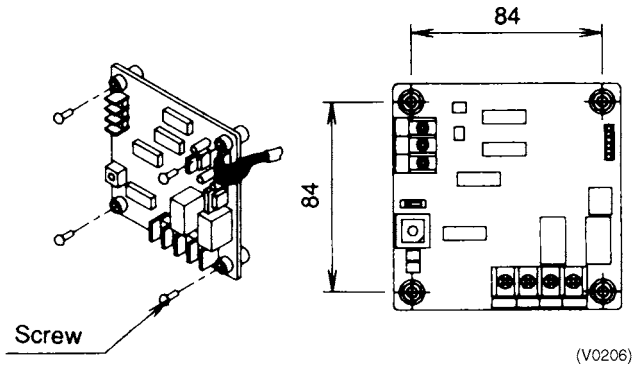

Note

1. Do not damage the PC board with your screwdriver, etc.
2. Install the adaptor inside an electric panel box to protect from electromagnetic waves and dust.

5.1.4 Electric Wiring Work and Initial Setting

First, wire between the indoor and outdoor units, and between each unit and the power supply source. Then, wire between the indoor unit and remote controller. Finally, check operation is normal.

For details, refer to the installation manuals for the indoor and outdoor units.

Next, wire between the indoor unit and the central remote controller. Then, wire the central remote controller to the power supply source and make the necessary settings. Finally, check operation is normal.

For details, refer to the installation manuals for the central remote controller.

Wire between the unification adaptor for computerized control and the central remote controller.

Refer to WIRING TO THE CENTRAL REMOTE CONTORLLER

Set the CHANGE OVER SWITCH and CONTROL MODE SWITCH. And, wire to the host computer monitor panel or other external input device.

Refer to WIRING TO EXTERNAL INPUT DEVICES

<Wiring to The Central Remote Controller>

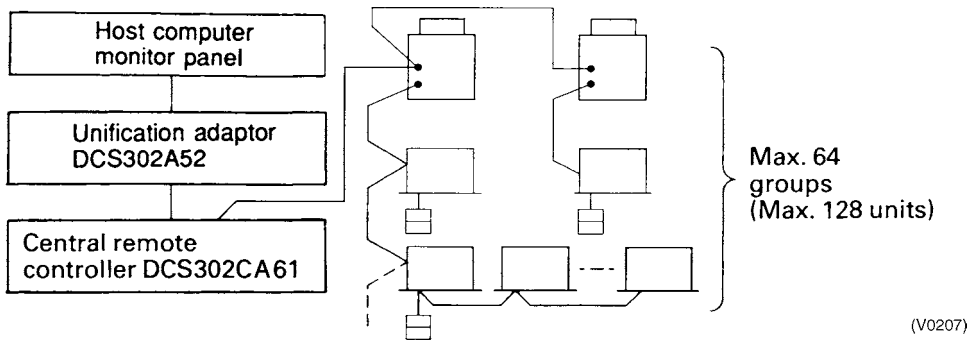

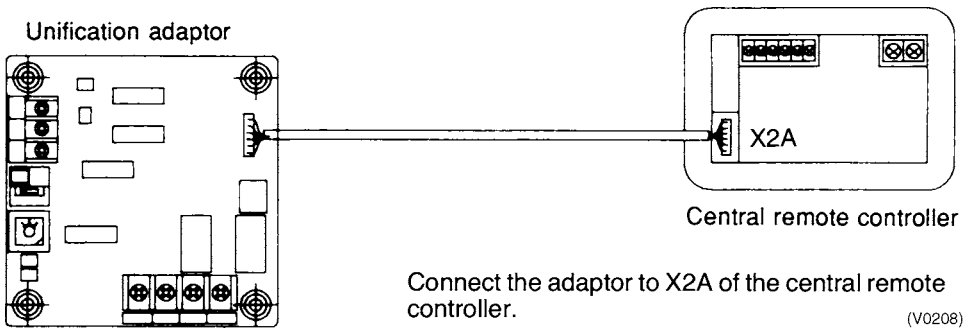

C : 2PA53489

<Wiring to External Input Devices>

(Wire specifications)
0.75-1.25 mm^2 gauge sheathed vinyl cord or cable (2-wire)
Max. length: 150 m

1. Control Input (Unified Operation/Stop)

Wire as explained here following, depending on whether input carries a voltage (VOLT.) or not (NON VOLT.).

(1) Input with Voltage

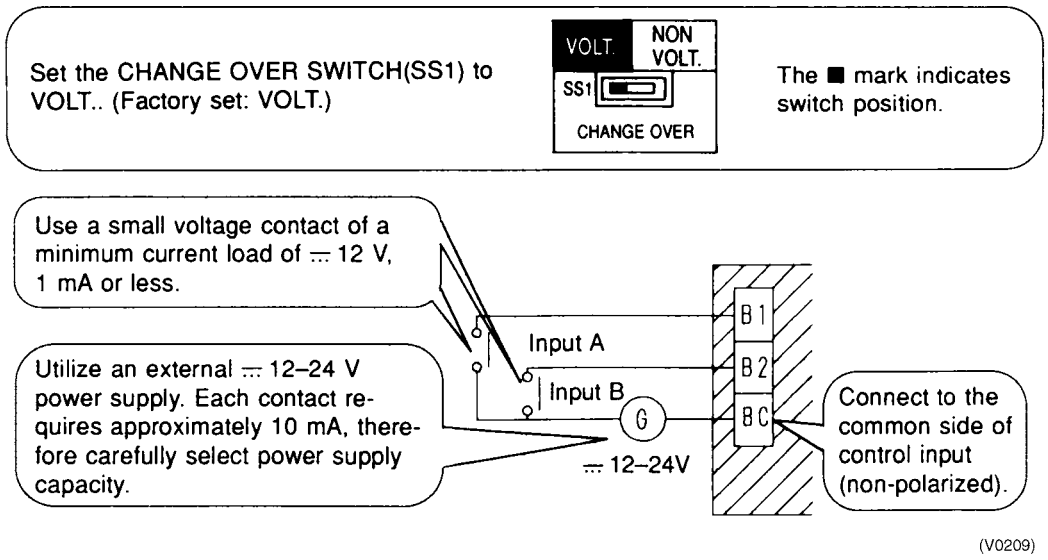

(2) Input with Non Voltage

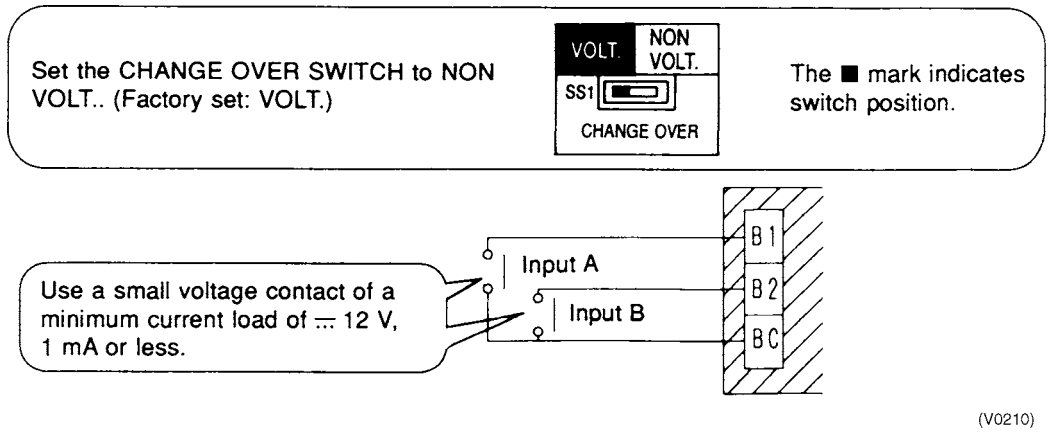

2PA53489

2. Control Mode Switch (RS1) Setting

Control mode can be selected from input A and B at this switch on the PC board adaptor.
(Factory set: 2)

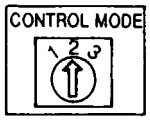

(V0211)

(1) For Normal Operation by Input A

Position	Input A
2	OFF → ON: Unified Operation
	ON → OFF: Unified Stop

■ Input B can be disregarded.

(2) For Instantaneous Operation by Input A and B
(Use an instantaneous input of 400 milli-sec. or more at ON time.)

Position	Input A	Input B
3	On: Unified Operation	ON: Unified Stop

(3) Do not set the switch to position 1. This switch can be set at any time.

3. Fetching the Display Signal

Terminals W1 - W4 are non voltage contacts used in normal operation to output operation display (W1 and W2) and malfunction display (W3 and W4) signals.
(The allowable current per contact is 10 mA - 3A.)

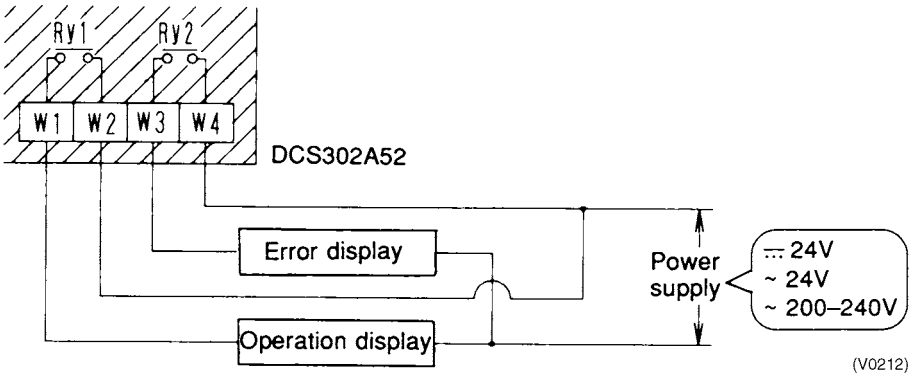

(V0212)

Note:
When using a 200-240 V power supply, keep power supply wiring away from wiring of input side.

Output conditions are indicated as below.

When Ry1 and Ry2 are OFF	When only Ry1 is ON	When only Ry2 is ON
All indoor units are stopped.	No error has occurred with the indoor units, and at least 1 unit is operating.	At least 1 unit has stopped operating due to malfunction, or a communications error has occurred between the central remote controller and the indoor unit.

2PA53489

14

5.2 <KRP2A61 / KRP2A62 / KRP2A53> Wiring Adaptor for Electrical Appendices (1)

5.2.1 System Configuration

The KRP2A61·62 enables operation by remote control (ON/OFF control, temperature setting, operation display, error display). With it, the following system can be built. Note however that the adaptor cannot be used with other optional controllers for centralized control.

1. Zone Control
   (Unified control of a max. 64 groups of a max. 16 indoor units each. But, the max. of indoor units is 128.)

This system requires the following parts.

- Wiring Adaptor for Electrical Appendices (1)
  ... KRP2A61 or KRP1A62
- Remote controller switches (For control)

...BRC1C62
BRC2C51
BRC3A61
} Per group

(Ex.) Zone control for 8 FXCQ63MVE units (control groups of 4, 3 and 1)

KRP2A61×1 kit
BRC1A61×3 kits
} 1 set required for each group.

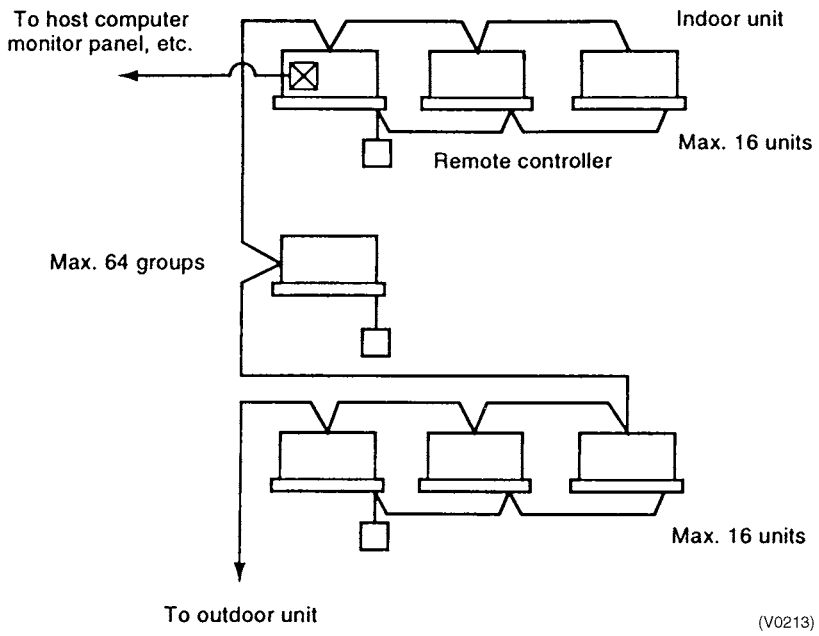

Note:

1. Individual indoor units connected to the centralized line cannot be displayed individually.
2. For wiring adaptor for electrical appendices (2) <**KRP4A51, 52, 53, 54**>, refer to page 503.

C : 1PA63641G

5.2.2 Names of Parts and Functions

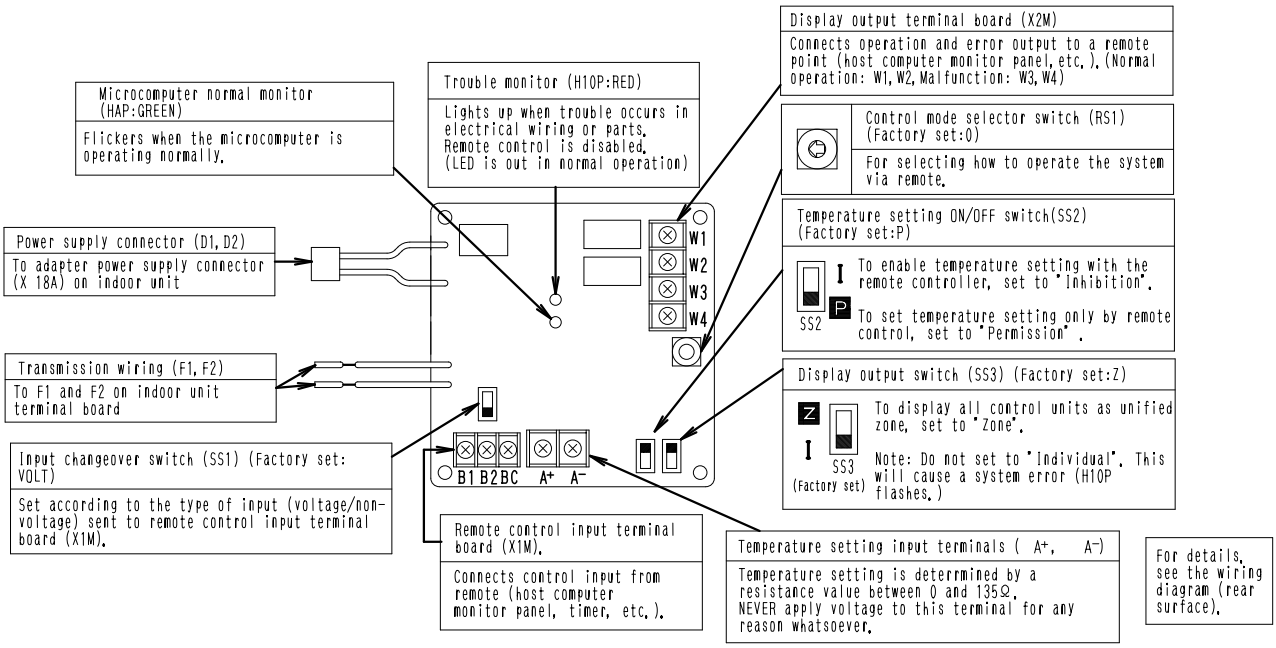

1PA63641G

5.2.3 Installation

Ceiling Mounted Cassette Corner Type

FXK(Q)
FXYKP

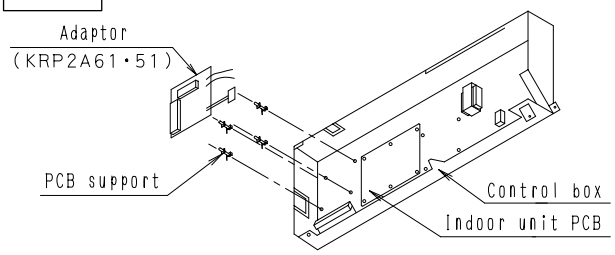

Ceiling Mounted Cassette Type (Double-Flow)

FXC(Q)
FXYCP

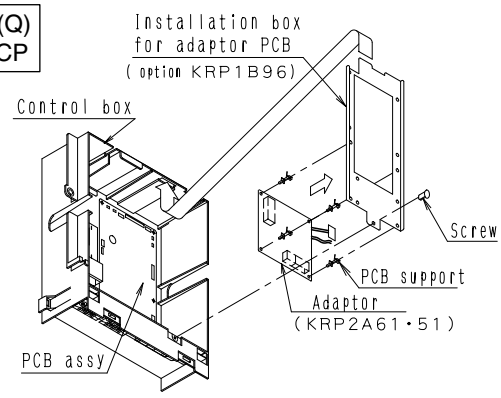

NOTE :Installation box for adaptor PCB is required to install the adaptor.

Ceiling Mounted Cassette Type (Multi-Flow)

FXF(Q)

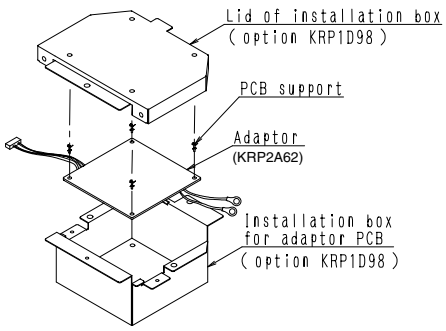

NOTE) Installation box for adaptor PCB is required to install the adaptor.
・Mount adaptor PCB on the lid of installation box with PCB supports attached to the adaptor.

C : 1PA63641G

14

Ceiling Mounted Duct Type

FXM(Q)40~125
FXYMP40~125

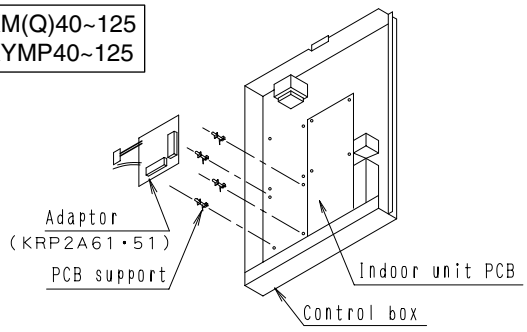

FXM(Q)200 · 250
FXYMP200 · 250

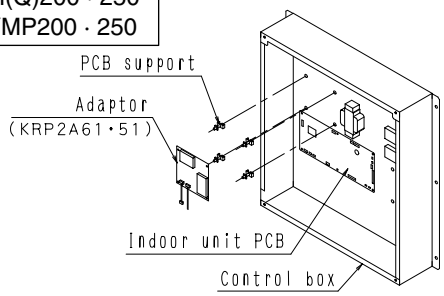

Ceiling Mounted Built-In Type
Ceiling Mounted Built-In Type (Rear Suction)

FXS(Q)
FXYSP
FXYB

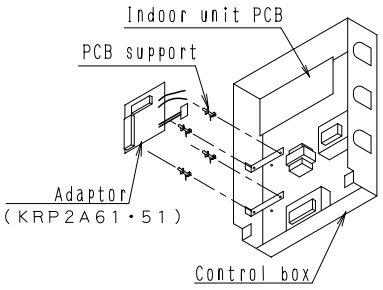

Note :
Installation box is necessary for second adaptor (FXS (Q)) .

Ceiling Suspended Type

FXH(Q)
FXYHP

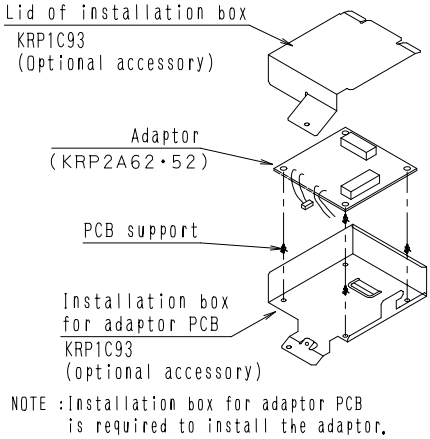

NOTE :Installation box for adaptor PCB is required to install the adaptor.

Floor Standing Type

FXL(Q), FXYLP
FXN(Q), FXYLMP

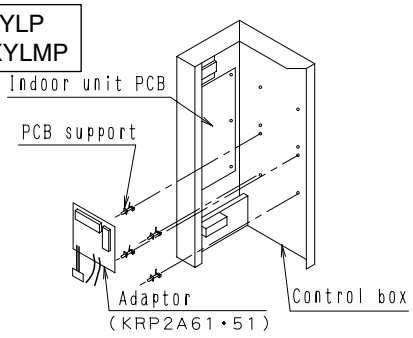

Slim Ceiling Mounted Duct Type

FXD(Q)

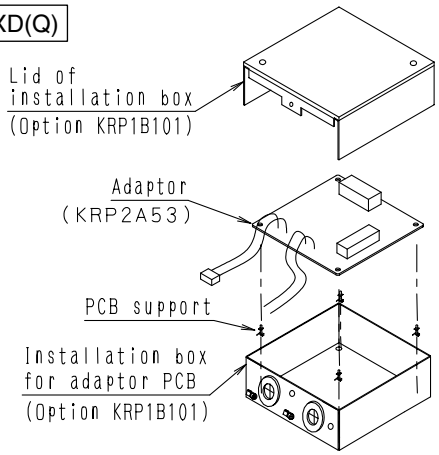

NOTE :Installation box for adaptor PCB is required to install the adaptor.

Wall Mounted Type

FXA(Q)

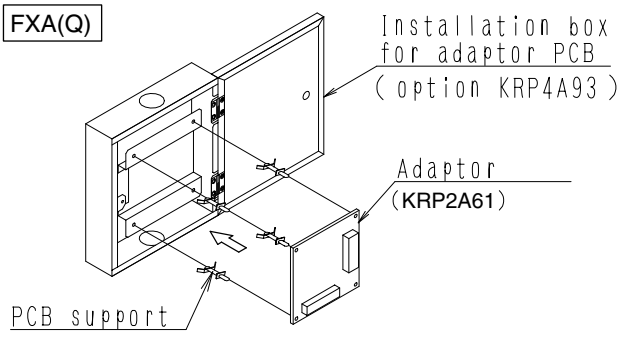

C : 1PA63641G

5.2.4 Electric Wiring Work

1. First, wire between the indoor and outdoor units, then to the separate power sources, and between the indoor units and the remote controllers. Then, check wiring is correct. (If wanting group control by remote controller, check transmission wiring.) For details, see the installation manual of the indoor and outdoor units.

2. Next, wire between the wiring adaptor for electrical appendices (1) and the indoor units. For details, see **Wiring to indoor units**.

3. Finally, wire between external units such as the host computer monitor panel, and make the necessary settings. For details, see **Wiring to external units (host computer monitor panel)**.

Note:
It is not necessary to set address No. for centralized control.
(Setting is automatic.)

Wiring to Indoor Units

1. For Zone Control

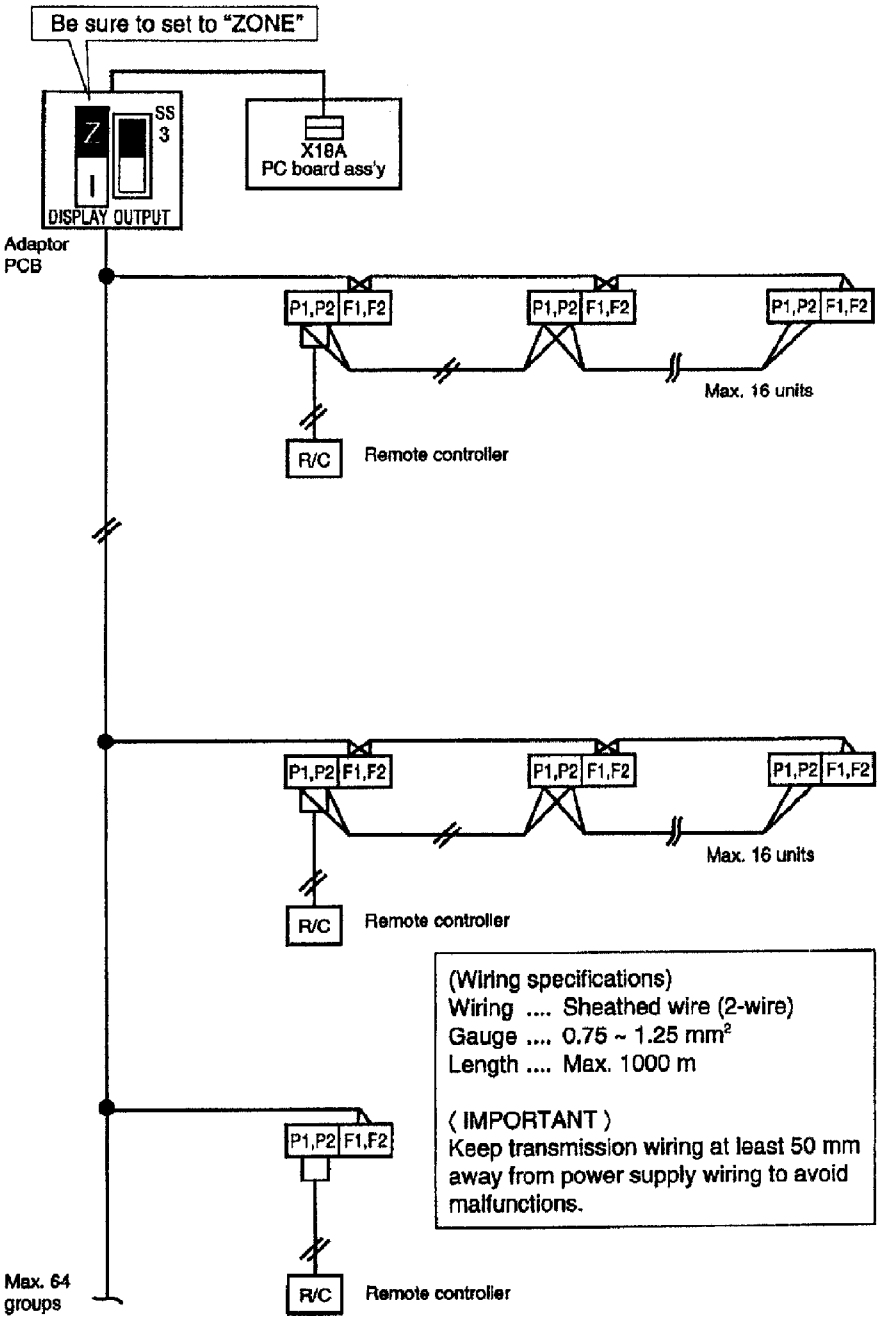

1PA63642B

14

5.2.5 Wiring to External Units (Host Computer Monitor Panel)

1. Remote Control Input (Operation Control)

Wire as described below. Wiring differs depending on whether using a voltage or non-voltage input.

■ For voltage input

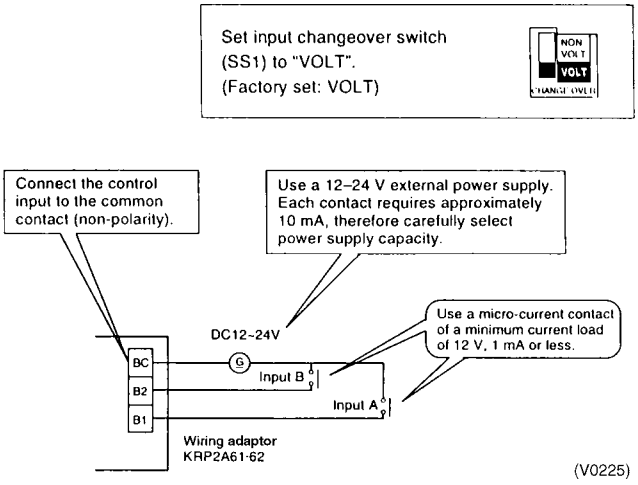

■ For non-voltage input

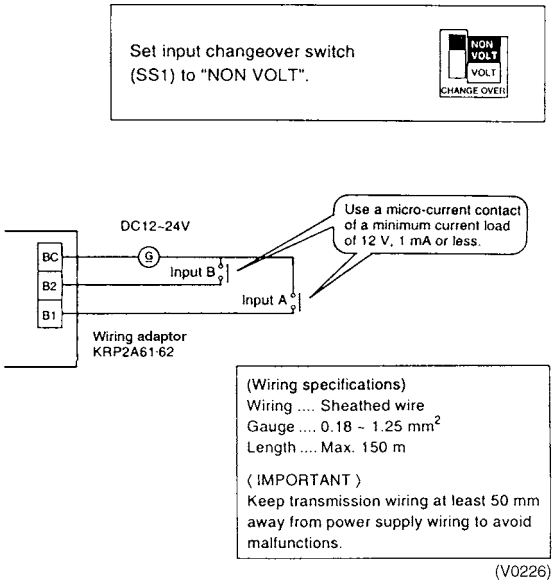

2. Setting Control Mode Selector Switch (RS1)

Using control mode selector switch (RS1), select the control mode as described below.

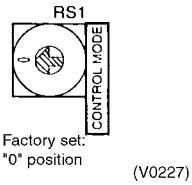

(1) When operating with only individual display function

Position	Function
0	Individual Display (Input Ignored)

(2) When operating with constant input from A

Position	Function	Contents when input A is ON	Contents when input A is OFF
1	Remote controller rejection	Operation (remote controller is normally rejected)	Stop + remote controller rejection
2	Central priority	Operation + remote controller accepted	
3	Stop by remote controller acceptable	Operation + stop by remote controller acceptable (No operation by the remote controller)	
4	Remote controller acceptance/ rejection	Remote controller acceptance only (No operation by the remote location)	

Note:

■ Input B is for forced-OFF. When ON, stop + remote controller is rejected, and input A is ignored. When OFF, even if A is ON, the contents of when input A is ON, are not achieved. Input A must therefore be re-input.

C : 1PA63642B

(3) When operating with momentary input from A
(Use a momentary input of ON time 200 milli-sec. or longer.)

Position	Function	Contents of Input A	Function of Input B
5	Remote Controller Rejected	Stop for ON while operating, Operate for ON while stopping	Input B will be forced stop function (When ON, stop + remote controller is rejected, input A is ignored.)
6	Last Command Priority	Stop for ON while operating, Operate for ON while stopping (Remote controller is normally accepted.)	

■ For demand control from input B

Position	Function when input A is ON	Function when input B is ON
C	Remote controller rejected (Same as position"5")	Forced thermostat OFF command
D		Forced temperature shift command
E	Last command priority (Same as position "6")	Forced thermostat OFF command
F		Forced temperature shift command

■ Forced thermostat OFF command
Forces indoor unit to operate the fan only.
■ Forced temperature shift command
The indoor unit operates at 2°C higher (cooling) or 2°C lower (heating) than the set temperature.

Note:
■ In zone control, operation is displayed as long as one indoor unit is running. When in the last command priority mode, some units are not operating while ON.
■ In such case, even if input A is ON, the unit and all other units in the same zone will stop.

(4) When operating with dual momentary inputs from A and B (Use a momentary input of 200 milli-sec. or longer.)

Position	Function	Contents when Input A is ON	Contents when Input A is OFF
7	Remote Controller Rejection	Operation (remote controller is normally rejected)	Stop + remote controller rejection
8	Central Priority	Operation + remote controller accepted	
9	Stop by Remote Controller Acceptable	Operation + stop by remote controller acceptable (No operation by the remote controller)	
A	Remote Controller Acceptance/Rejection	Remote controller acceptance only (No operation by the remote location)	
B	Last Command Priority	Operation (remote controller is normally accepted)	Stop (remote controller normally accepted)

Note:
■ Doing constant input A with position 7-A, it will be forced OFF function (input A is ignored).
■ Constant input cannot use for input B with position B.

1PA63642B

14

3. Temperature Setting Input

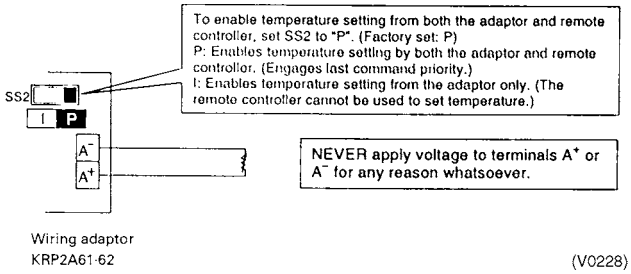

Temperature setting corresponds to resistance values in the range of 0 to 135Ω. Their relationship is as shown below.

Temperature Setting (°C)	16	17	18	19	20	21	22	23	24
Resistance (Ω)	0.0~3.4	5.0~11.6	13.8~20.0	22.4~28.4	31.0~36.4	39.4~44.8	48.2~52.8	56.6~61.2	65.2~69.4

Temperature Setting (°C)	25	26	27	28	29	30	31	32
Resistance (Ω)	73.8~77.8	82.4~85.8	91.0~94.0	99.4~102.2	108.6~110.4	117.2~119.2	125.8~127.4	134.2~140.0

Note:
Wiring resistance included in above figures.

(Wiring specifications)
Wiring ... Sheathed wire
Gauge ... 1.25~2.00 mm²
Length ... Max. 70 m
(IMPORTANT)
Keep transmission wiring at least 50 mm away from power supply wiring to avoid malfunctions.

4. Canceling Display Signals

Operation output terminals (W1 and W2) and malfunction output terminals (W3 and W4) are non-voltage constant contact output.
(Allowed electric current per contact is between 10 mA and 3 A.)

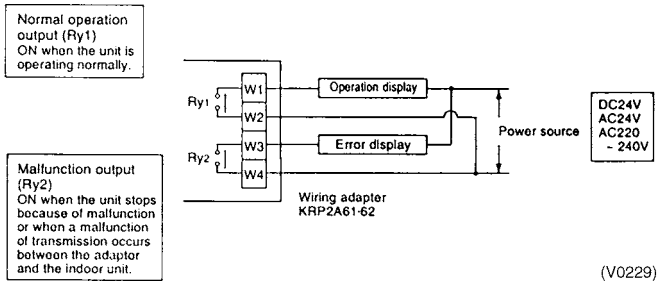

Note:
If using a 220~240V power supply, keep transmission wiring at least 50 mm away from incoming power supply wiring.

Output / System	Both Ry1 and Ry2 OFF	Ry1 only ON	Ry2 only ON
Zone control	All zones OFF	At least one unit running normally, no malfunction	Even 1 unit stopped due to malfunction or malfunction of transmission between adaptor and indoor unit

Display output is described by system in the below table.

Note:
If rewiring F1 and F2 after running the system, turn ON power for 5 minutes, then turn it OFF and ON again. Changes to wiring can sometimes disable control from the wiring adaptor.

C : 1PA63642B

5.3 <KRP4A51 / KRP4A52 / KRP4A53 / KRP4A54> Wiring Adaptor for Electrical Appendices (2)

5.3.1 Outline / Features

This adaptor is an interface required to connect the indoor unit with the central monitoring panel. And by installing this adaptor in the indoor unit, it enables you to have various remote controls (ON/OFF, temperature setting, operation status display and malfunction display). One adaptor can control simultaneously the group of units (Max. 16 units) connected to the remote control wiring line (P1, P2).

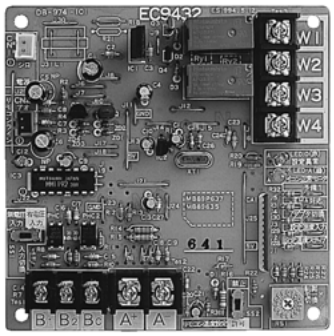

Note:
1. This adaptor cannot be used together with central control equipment and data station.
2. The model of adaptor differs according to the type of indoor unit to be installed.

5.3.2 Applied Model

Applied Model		Remark	Applied Model	Remark	Note
VRV Systems	VRV Plus Series	○	SkyAir Series	○	
	VRV Inverter "K(A)" "K(U)" Series	○	Room Air-Conditioner	×	
	VRV Heat Recovery Series	○	Other Air-Conditioner	×	
	VRV II Series	○	HRV Unit	○	BRC1B61, 62 etc. are required.

5.3.3 System Configuration

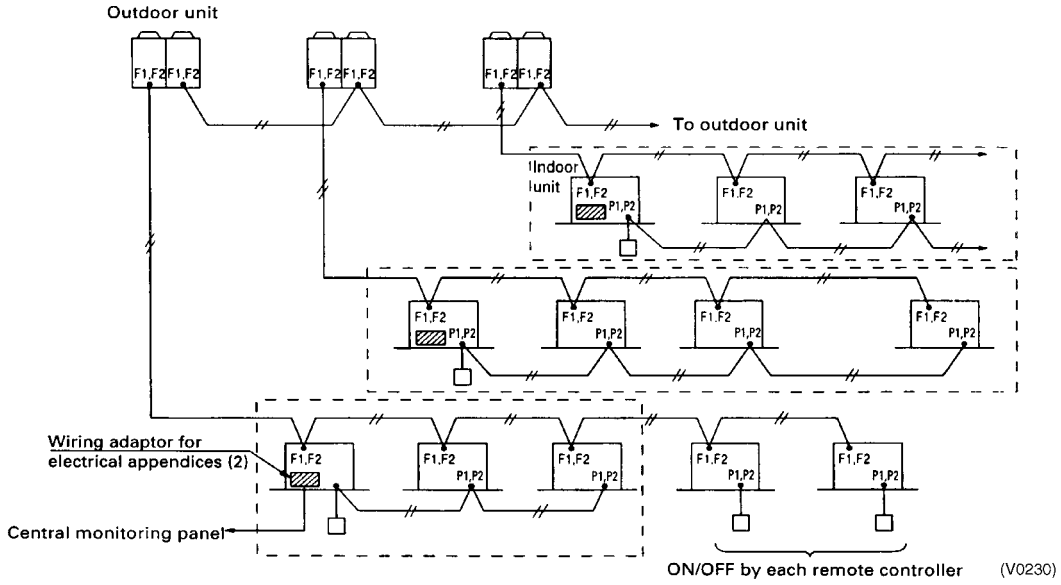

Note:
1. Marked ▨ shows wiring adaptor for electrical appendices.
2. Marked ⬚ indicates the same control range.
3. The wiring adaptor for electrical appendices (2) can control simultaneously the group of the units (Max. 16 units) connected to the remote control wiring line (P1, P2). In another words, all the units connected between P1 and P2 terminal have the same control.

■ **Point of wiring**

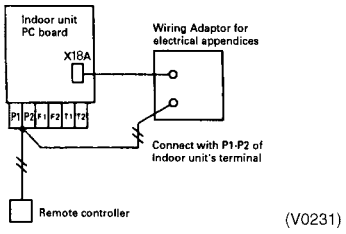

14

5.3.4 Names and Functions of Operating Part

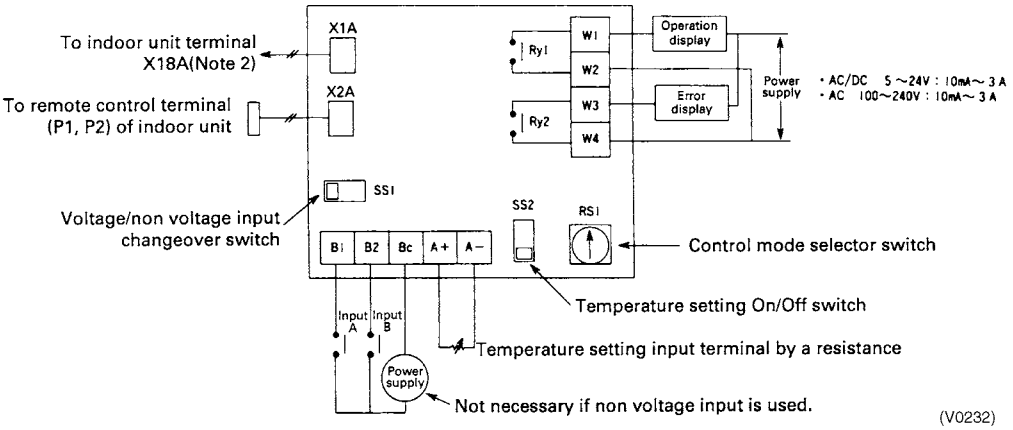

Note:

1. This is valid only for the indoor unit, which has a temperature setting function.
2. Terminal No. X18A is for the indoor unit of VRV system. For SkyAir series and other air-conditioner, connect to the relevant terminal for each units.

5.3.5 Input/Output for External Control

1. Depending on whether [voltage input] or [non voltage input], connect the wiring as shown below.

■ **Input with Voltage.**

Set the Voltage/Non voltage changeover switch (SS1) to VOLT.

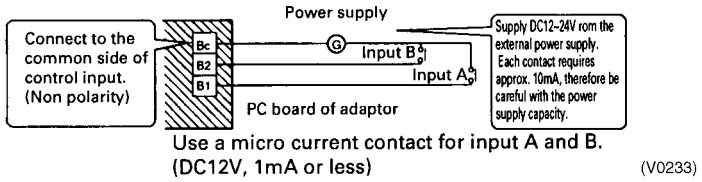

■ **Input with No Voltage.**

Set the Voltage/Non voltage changeover switch (SS1) to NON VOLT.

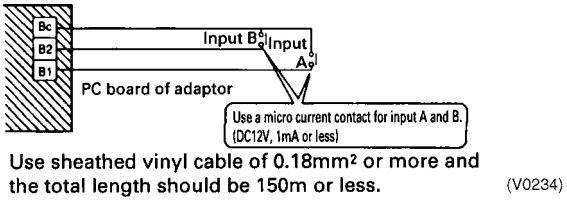

2. Display Signal Retrieval (Output)

The normal operation output terminals (W1, W2) and error output terminals (W3, W4) are non-voltage output contacts. (Permissive current is 10mA~3A per contact.)

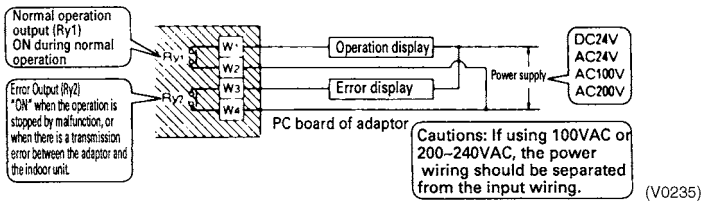

Output is as given below.

Output / System	Both Ry1 and Ry2 is OFF.	Only Ry1 is ON.	Only Ry2 is ON.
Group control	OFF	All normal operation	At least one unit is stopped due to error or transmission error between the adaptor and the indoor unit.

3. Temperature Setting Input

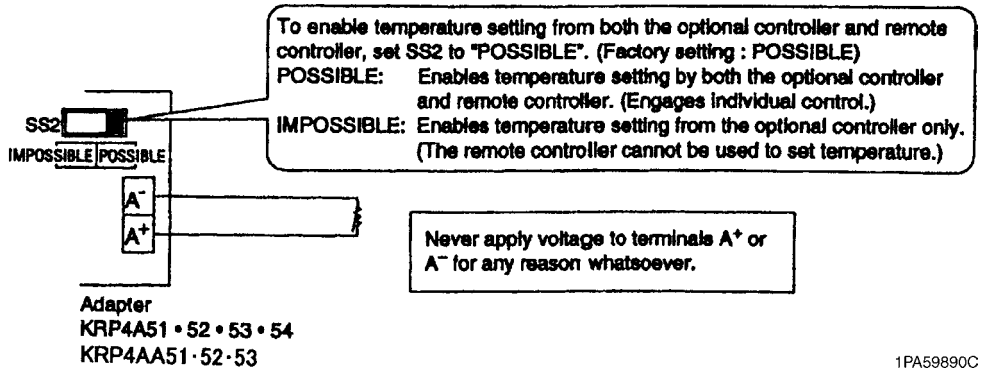

Temperature setting corresponds to resistance values in the range of 0 to 135Ω.
Their relationship is as shown below.

Relation between the setting temperature and the resistance are as follows.

Setting temperature (°C)	16	17	18	19	20	21	22	23	24	25	26	27	28	29	30	31	32
Resistance (Ω)	0.0 ~ 3.4	5.0 ~ 11.6	13.8 ~ 20.0	22.4 ~ 28.4	31.0 ~ 36.4	39.4 ~ 44.8	48.2 ~ 52.8	56.6 ~ 61.2	65.2 ~ 69.4	73.8 ~ 77.8	82.4 ~ 85.8	91.0 ~ 94.0	99.4 ~ 102.2	108.6 ~ 110.4	117.2 ~ 119.2	125.8 ~ 127.4	134.2 ~ 140.0

Note:

- The value of resistance includes the resistance of wiring.
- The setting temperature is limited within the setting range of indoor unit. If you set the temperature outside of the range by the adaptor, it controls at the nearest setting range.

Setting of Control Mode Selector Switch (RS1)

Position	Functions	Description of Operation by Input Mode A and B	
		Input A (Between B1~Bc)	Input B (Between B2~Bc)
0	Input Ignored	—	—
1	Remote Control Rejection	Start at ON, and stop at OFF	Stop at ON (remote control rejection), Input A acceptance at OFF
2	Central Priority	Start at ON (remote control acceptance), stop at OFF (remote control rejection)	
3	Remote Control Acceptance/ Rejection	The same as position 1 (Only stop is accepted by remote controller)	
4	Remote Control Acceptance/ Rejection, OFF	Start at ON (remote control acceptance), stop at OFF (remote control rejection)	
5	Remote Control Rejection	Start/Stop (Repeats)	
6	Last Command Priority	The same as position 5 (remote control acceptance all the time)	Stop at ON remote control acceptance), start at OFF (remote control rejection)
7	Remote Control Rejection	Start at ON	Stop at ON.
8	Last Command Priority	Start at ON (remote control acceptance)	Stop at ON (remote control rejection)
9	Remote Control OFF Acceptance	The same as position 7 (Only stop is accepted by remote controller)	The same as position 7
A	Remote Control Acceptance/ Rejection, OFF	Start at ON (remote control acceptance)	Stop at ON (remote control rejection)
B	Last Command Priority	The same as position 7 (remote control acceptance all the time)	The same as position 7
C	Position 5 + Energy Saving Control	The same as position 5	Forced thermostat OFF at ON
D	Position 5 + Temperature Set-Back		Setting temperature shift command at ON
E	Position 6 + Energy Saving Control	The same as position 6	Forced thermostat OFF at ON
F	Position 6 + Temperature Set-Back		Setting temperature shift command at ON

Note:

1. When constant input is used for input B at position 7~A, the system is shut-down forcibly (Ignored input A). Constant input cannot be used for input B at position B.
2. Refer to the followings for the outline of above functions.

■ **Description of Functions (Outline)**

1. Remote Control Rejection	For when you want to turn ON/OFF only by central remote controller. (ON/OFF cannot be controlled by remote controller for indoor unit.)
2. Remote controller OFF Only Accepted	For when you want to turn ON only by the central remote controller, and turn OFF only by remote controller for indoor unit.
3. Central Priority	For when you want to turn ON only by the central remote controller, and during the set time, turn ON/OFF freely by remote controller for indoor unit.
4. Individual Priority (Last command priority) ...	For when you want to turn ON/OFF by both central remote controller and remote controller for indoor unit.
5. Remote Controller Permission Timer	For when you want to turn ON/OFF by remote controller for indoor unit during set time, and you want to start the operation by remote controller for indoor unit at the programmed time of system start.

<Example when the control mode selector switch is set at position 6>

The following is the time chart for the command by remote controller and the indoor unit against input signal.

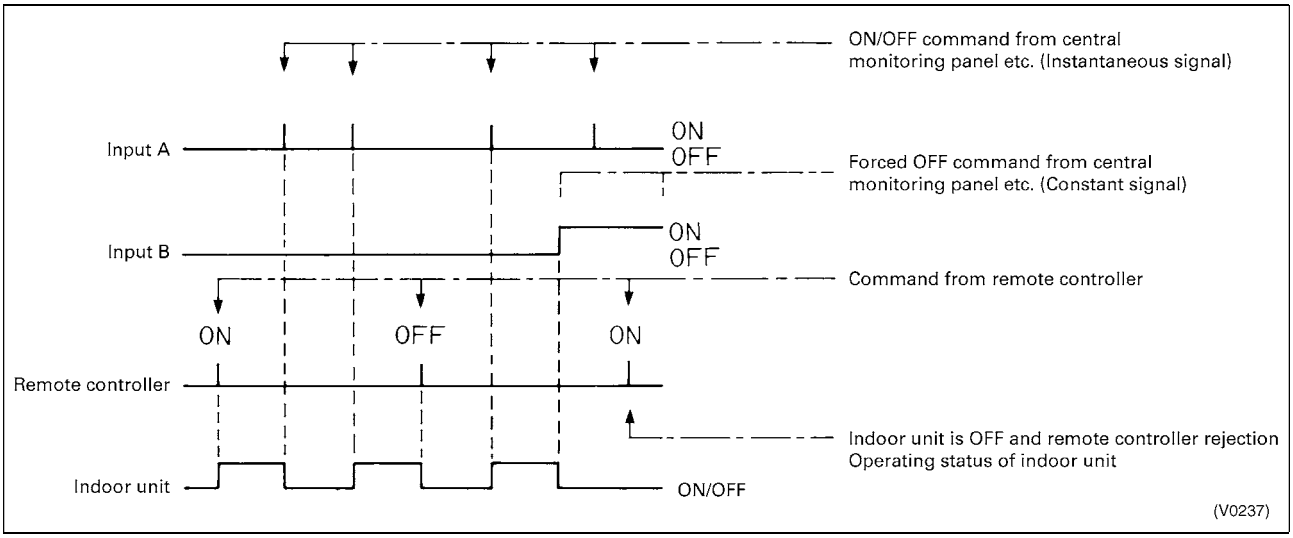

5.3.6 Instruction for Installation

Ceiling Mounted Cassette Type (Multi-Flow)

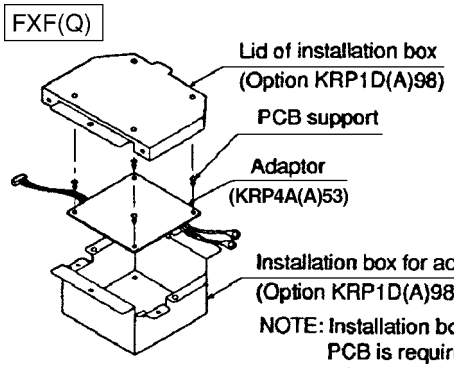

NOTE: Installation box for adaptor PCB is required to install the adaptor.

Slim Ceiling Mounted Duct Type
Ceiling Mounted Cassette Type (Multi-Flow) 600×600

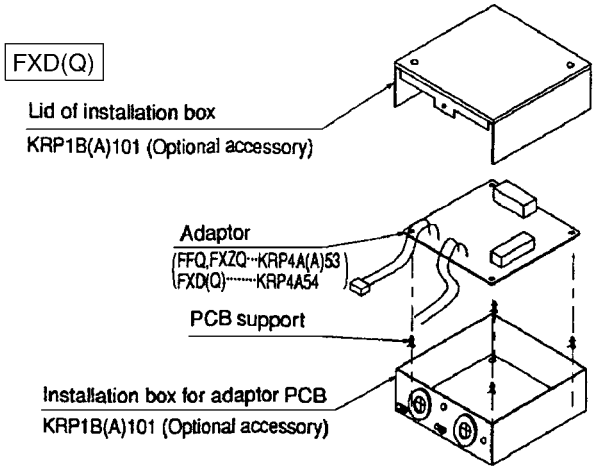

NOTE : Installation box for adaptor PCB is required to install the adaptor.

Ceiling Mounted Cassette Type (Double-Flow)

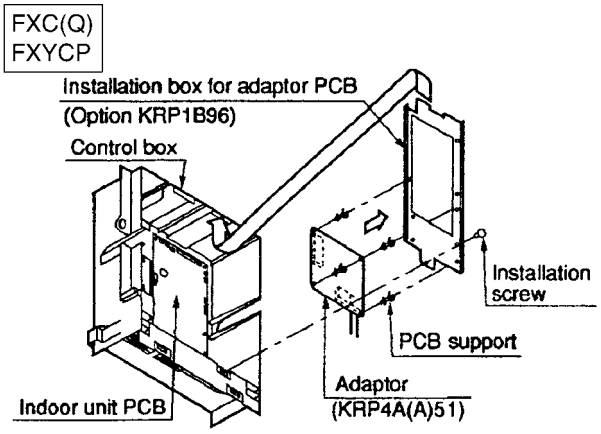

NOTE) A separate plate is needed to install the adaptor PCB.

Ceiling Mounted Cassette Corner Type

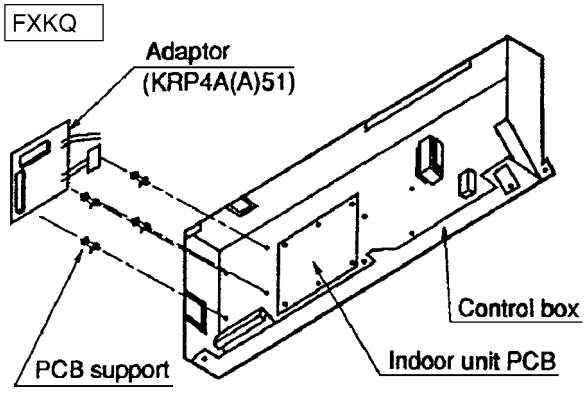

Ceiling Suspended Type

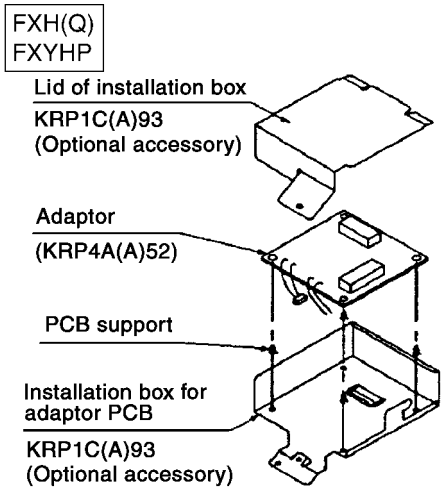

NOTE : Installation box for adaptor PCB is required to install the adaptor.

Ceiling Mounted Built-In Type

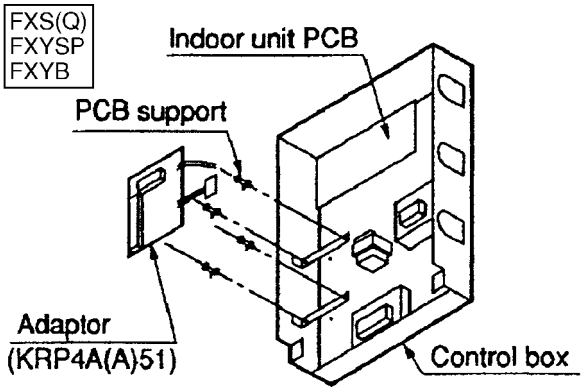

Note :
Installation box is necessary for second adaptor (FXS) .

Note:
The above shows the installation for VRV indoor unit. For the SkyAir series and other air-conditioner, it may be different from the ones showed above and refer to its engineering data for the details.

C : 1PA59889H

14

Ceiling Mounted Duct Type

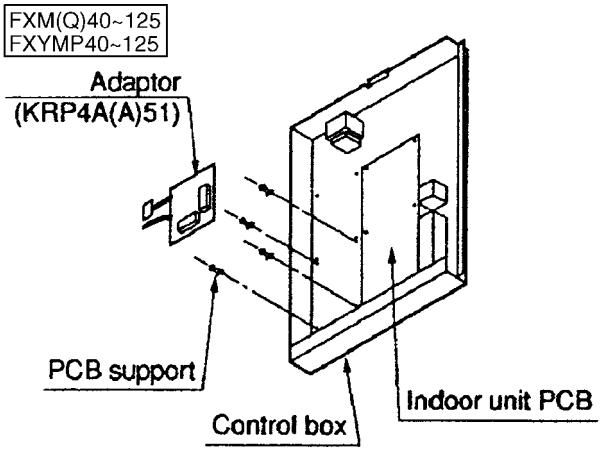

Floor Standing Type

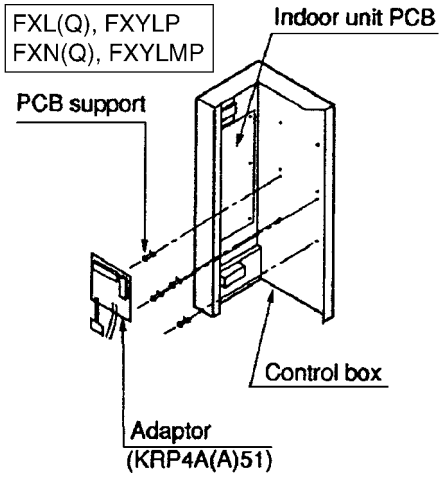

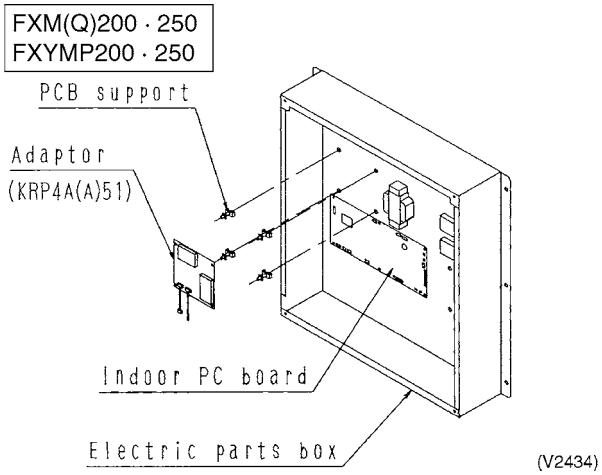

Wall Mounted Type

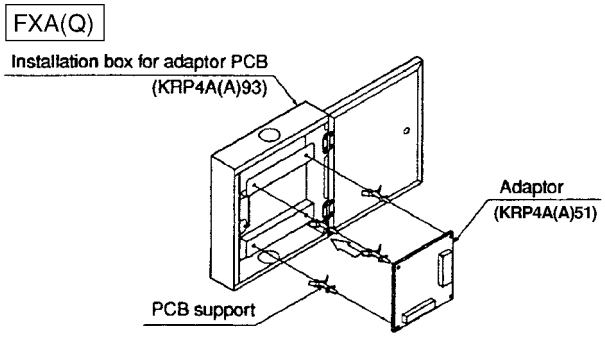

Note:
The above shows the installation for VRV indoor unit. For the SkyAir series and other air-conditioner, it may be different from the ones showed above and refer to its engineering data for the details.

C : 1PA59889H

5.4 <DTA102A52> Interface Adaptor for SkyAir Series

5.4.1 Accessories

Check if the following accessories are included in the kit.

Adaptor	Relay Harness
x 1 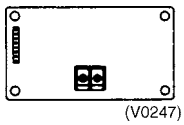 (V0247)	x 1  (V0248)

PC Board Support	x 4
Tie Wrap	x 2
Installation Manual	x 1

5.4.2 System Outline

- By connecting this kit to an optional controller for centralized control, all units of the SkyAir Series in the system can be controlled as a group from the optional controller.
- One kit must be installed onto the master unit of each group.

5.4.3 Names of Parts and Function

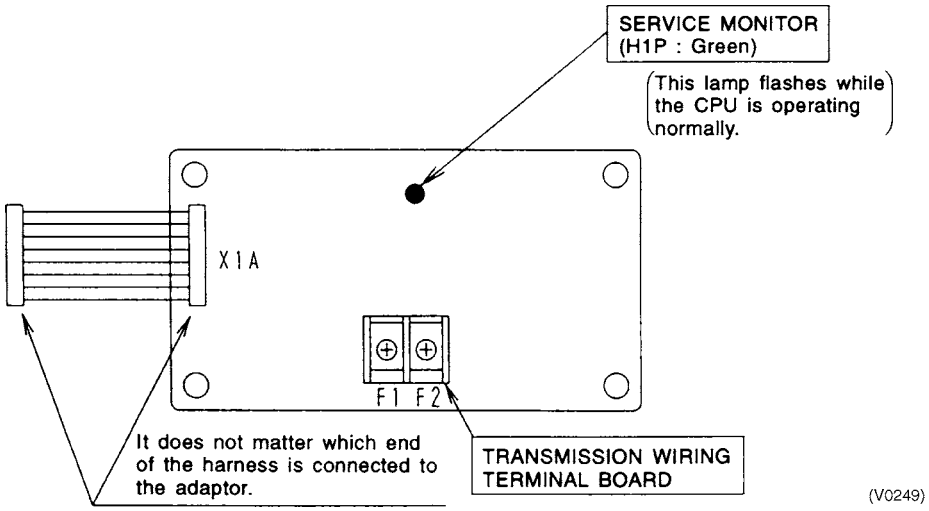

5.4.4 Electric Wiring

- Wire this kit as described below.
- Make sure wires to units do not pass over the PC board when wiring.

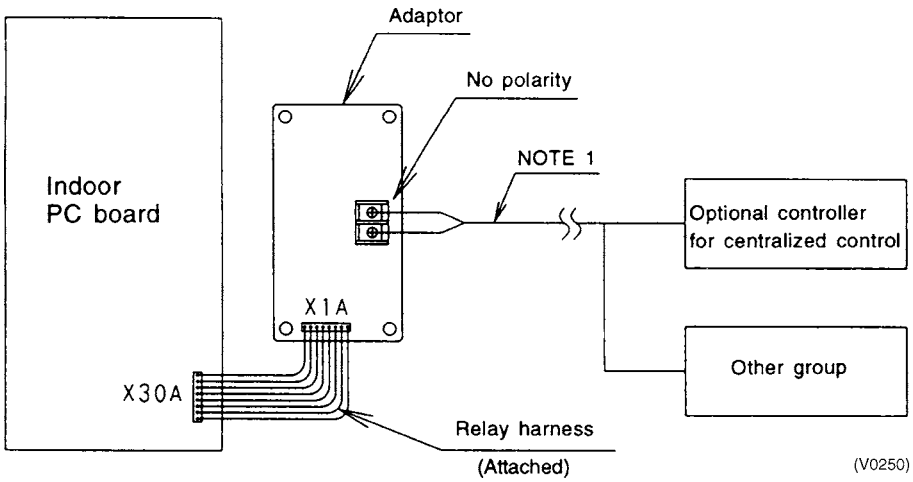

Note:

1. Wiring specifications ... Use a 0.75 - 1.25 mm² sheathed vinyl cord or cable (2 wire).
2. For details on compatible systems and how to connect to optional controllers, see the instruction manual of the optional controller and technical reference materials.

1PA59896

5.4.5 Installation

- Installation differs according to models as shown below.
- Do not bundle low and high voltage wires together.
- Bundle any excess wires with the attached tie wraps so as to keep loose wirings off the indoor unit PC board.

Ceiling Mounted Cassette Corner Type

FH(Y)K

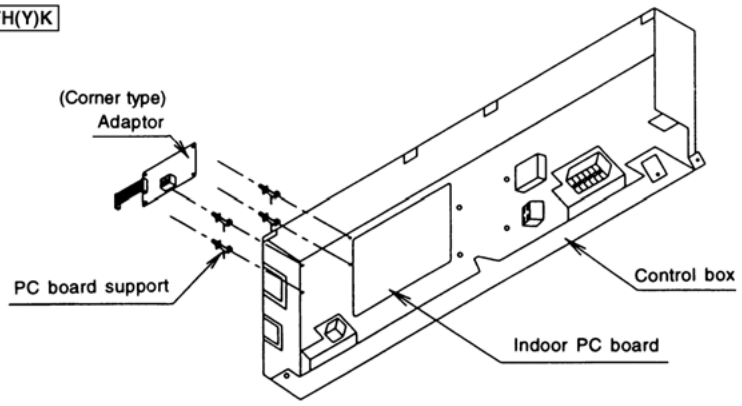

Ceiling Mounted Cassette Type (Multi-Flow)

FH(Y)C~K

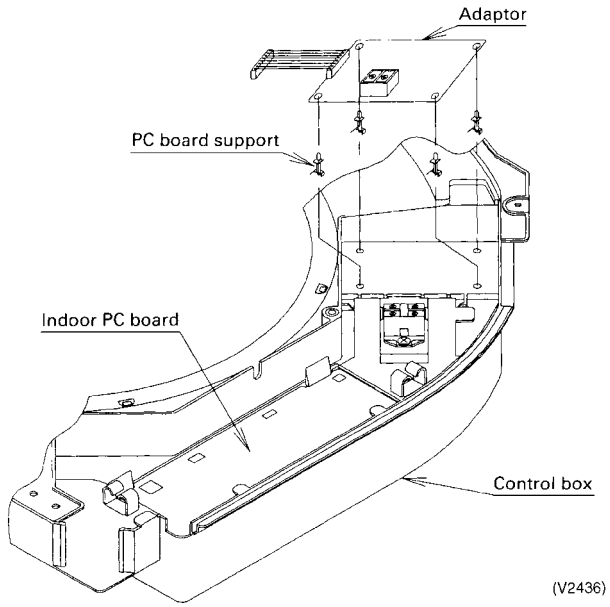

Ceiling Mounted Built-In Type

FH(Y)B

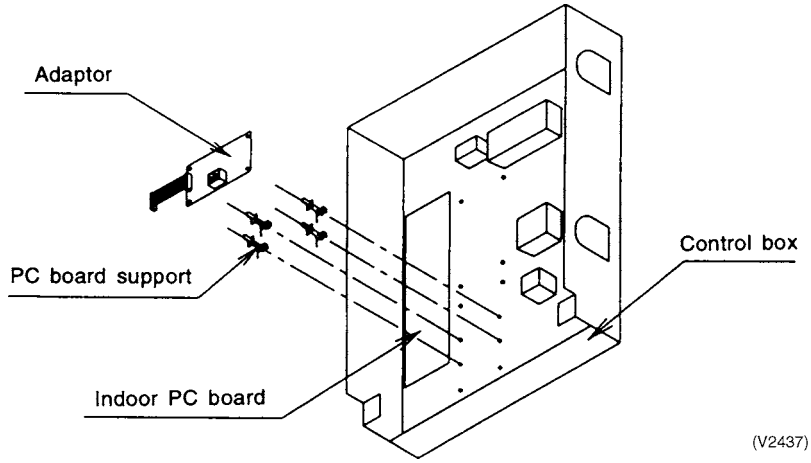

C : 1PA59896

Ceiling Suspended Type

FH(Y)

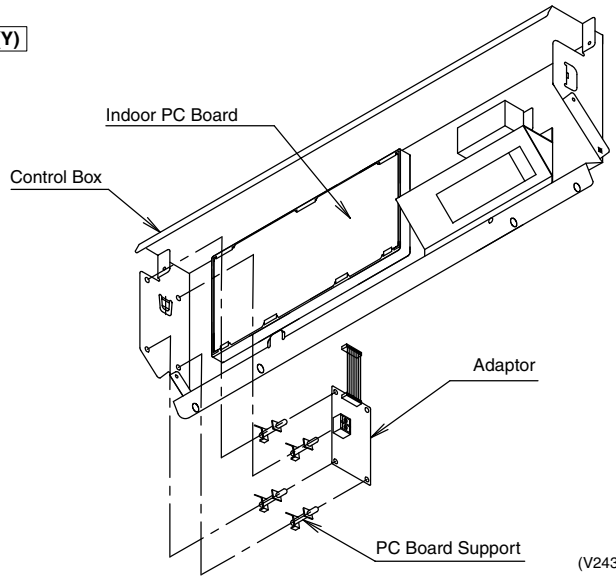

Floor Standing Type

FVY

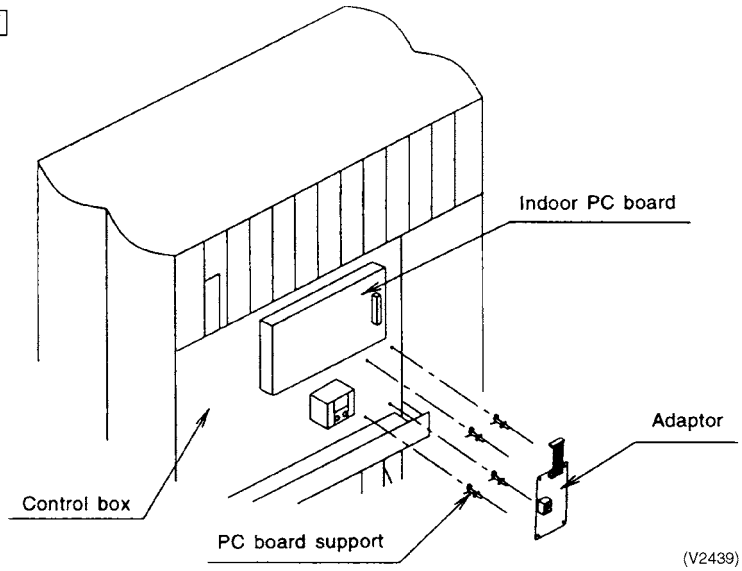

C : 1PA59896

14

5.5 <DTA107A55> Central Control Adaptor Kit

COMPONENTS

Check the following components are included in this optional accessory before installation.

CONTROL BOARD BOX

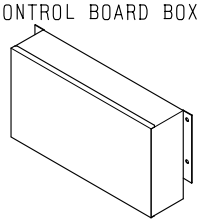

OPERATION MANUAL

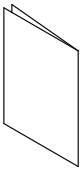

INSTALLATION MANUAL

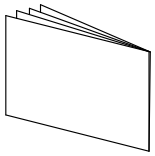

WIRE HARNESS

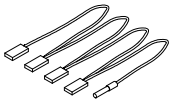

Give to the customer this OPERATION MANUAL certainly.

INSTALLATION

Deside the situation of Control Board Box.
It is affected the situations of the thermistor.
The length of lead wire - Thermistor:2.5m

① Install the thermistor (in the control board box) at the inlet duct or the suction grille.
Use the kit:remote sensor(KRCS01-1), if you need the longer length than it.(Can use it untill 12m.)

② Install the control board box on the wall or the pillar.
Make sure the wire inlet is at the bottom of the box.
Use 4 bolts(M5) for fixing the box.
Install the box in the indoor side.
(Example:Set it in the ceiling or in the room.)
Do not install the box in the air conditioner.
Fixing situation : See right Fig. (Height:125mm)
(※ shows the fixing pich.)

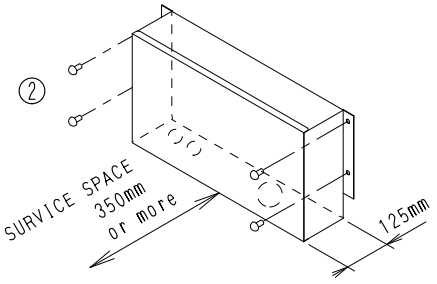

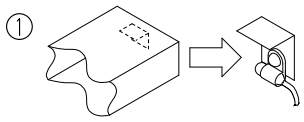

Example:Set the thermistor into the inlet duct and clamped by resin clamp and fix plate.

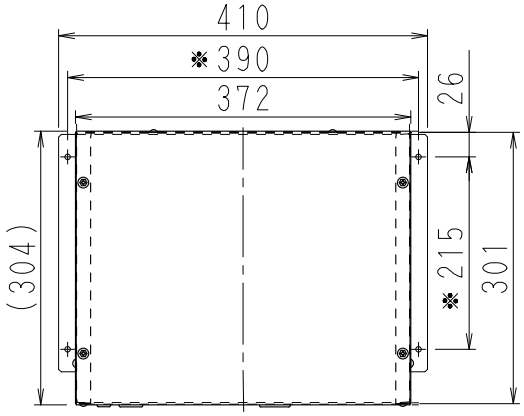

2P042157

ELECTRIC WIRING

GENERAL INSTRUCTIONS

- All wiring, components and materials to be procured on site must comply with the applicable local and national codes.
- Use copper conductors only.
- All field wiring and components must be provided by licensed electrician.
- Unit shall be grounded in compliance with the applicable local and national codes.
- After wiring work, check power to the equipment shuts OFF when swich is shut OFF.

⚠ WARNING

Use ring type crimp style terminal for connection to power supply terminal block.



If is not used, satisfy the following conditions:

- Do not connect wires of different gauge to the same power supply terminal. (Looseness in the connection may cause overheating.)
- When connecting wires of the same gauge, connect them according to the righthand figure.

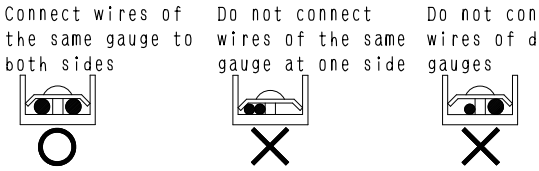

Wiring specification

Use the wire shown right for between the unit and the control board box.

Type	Size
UL1015 AWG18 equivalent	0.75mm² each

Connect the wiring between indoor and outdoor units, central controllers and remote controller. For details, refer to the installation manual of them.

① Remove the cover of the control board box, after setting it. (Parts situation is shown right Fig.)
② Install the thermistor throgh the bush. (It is in the control board box. See below Fig.)

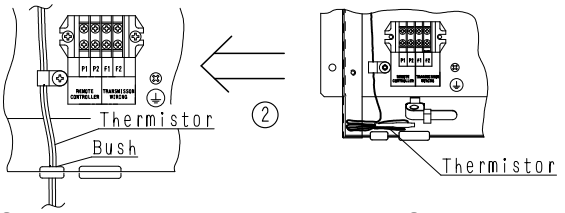

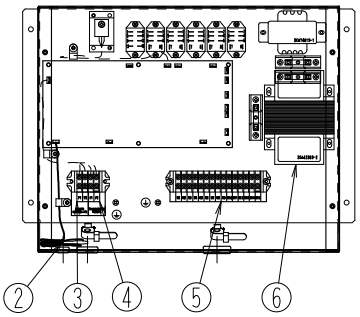

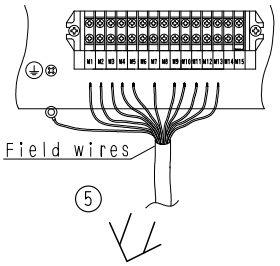

③ Connect the read wires of Remote Controller. (See the below Fig.) Ground the sheild of the cords to the control board box.

④ Connect the read wires of Central Control Unit. (See the below Fig.) Ground the sheild of the cords to the control board box.

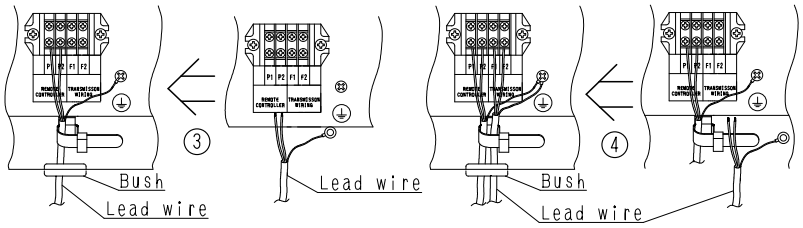

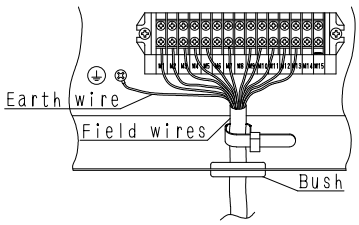

⑤ Connect the field wires to the Air Conditioner. (Details : See the back side.) Ground the control board box.

⑥ Changel the connection of transformer according to the right table. (Especially for Y1 Model.)

VOLTAGE		TERMINAL
PRIMARY	SECONDARY	
220V	200V	✱U-V1
230V	200V	U-V2
240V	200V	U-V3

✱ FACTORY CONNECTION

[Finished Wiring situation]

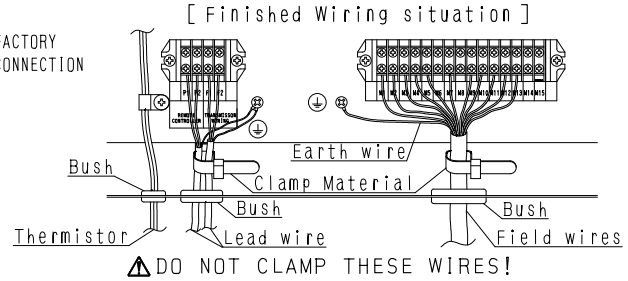

⚠ DO NOT CLAMP THESE WIRES!

Clamp these wires by clamp materials certainly. (Clamp the earth wire.) (See right Fig.)
Do not clamp the high voltage wires (Field wires) and the low voltage wiers (Lead wire and Thermistor) both inside and outside of the control boad box.

NOTE

- Prepare the remote controller (BRC1A62). [BRC1A52 is also OK.]
  REASON:The remote controller is needed per each kit for setting the address.

2P042157

14

CONNECTION OF THE TERMINAL

Connect between the air conditioner and DTA107A55 shown below.

In case of FD03～05K

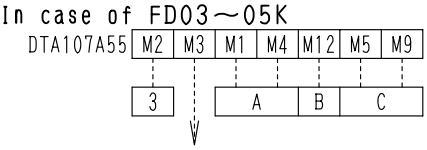

Connect the wiring between the box of this kit and the EL. COMPO. BOX ASSY of the indoor unit. 〔Refer to the wiring diagram of the indoor unit.〕

See below for connecting the terminal "M3". (The Output of alarm signal)
About these models, we can only output the alarm signal of indoor fan motor.
Connect the wiring between the terminal "M3" and the terminal "96" of magnetic contactor of indoor fan motor(K1M).

In case of FD06～10K

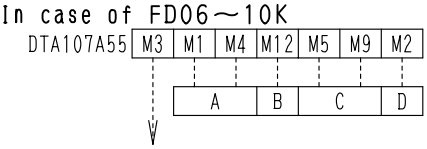

Connect the wiring between the box of this kit and the EL. COMPO. BOX ASSY of the indoor unit. 〔Refer to the wiring diagram of the indoor unit.〕

See below for connecting the terminal "M3". (The Output of alarm signal)
Use the attached wire harness and change from the wire to it. The wire is connected between K1R(5), K1R(7), K2R(7), and K3R(5). 〔( ) is shown the terminal.〕
Connect the wiring between the terminal "M3" and the solderless splices butt "M3" of the wire assy.

In case of FD15・20K

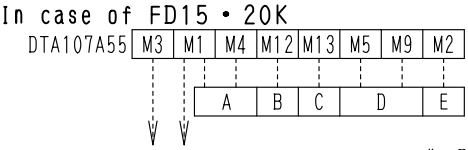

Connect the wiring between the box of this kit and the EL. COMPO. BOX ASSY of the indoor unit. 〔Refer to the wiring diagram of the indoor unit.〕

See below for connecting the terminal "M3". (The Output of alarm signal)
Connect the wiring between the terminal "M1" and the terminal "6" of K4R(magnetic relay).
Connect the wiring between the terminal "M3" and the terminal "4" of K4R(magnetic relay).

In case of UAT06～10K, UAT06～12KA

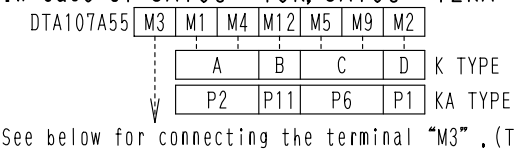

Connect the wiring between the box of this kit and the EL. COMPO. BOX ASSY of the air conditioner. 〔Refer to the wiring diagram of the air conditioner.〕

See below for connecting the terminal "M3". (The Output of alarm signal)
Use the attached wire harness and change from the wire to it. The wire is connected between K1R(5), K1R(7), K2R(7), and K3R(6). 〔( ) is shown the terminal.〕
Connect the wiring between the terminal "M3" and the solderless splices butt "M3" of the wire assy.

In case of UAT15・20K, UAT15～21KA

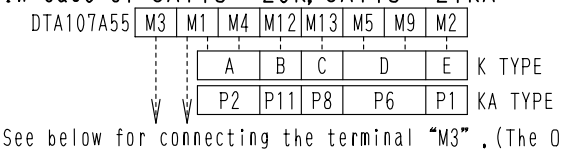

Connect the wiring between the box of this kit and the EL. COMPO. BOX ASSY of the air conditioner. 〔Refer to the wiring diagram of the air conditioner.〕

See below for connecting the terminal "M3". (The Output of alarm signal)
Connect the wiring between the terminal "M1" and the terminal "6" of K3R(magnetic relay).
Connect the wiring between the terminal "M3" and the terminal "4" of K3R(magnetic relay).

In case of UATY06K

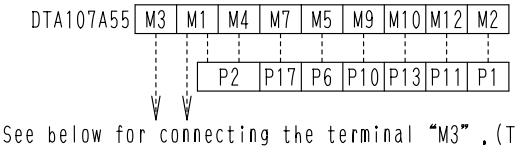

Connect the wiring between the box of this kit and the EL. COMPO. BOX ASSY of the air conditioner. 〔Refer to the wiring diagram of the air conditioner.〕

See below for connecting the terminal "M3". (The Output of alarm signal)
In case of Y1, connect the wiring between the terminal "M1" and the terminal "5" of K2R(magnetic relay).
Connect the wiring between the terminal "M3" and the terminal "3" of K2R(magnetic relay).
In case of Y19, connect the wiring between the terminal "M3" and the terminal "8" of K4R(magnetic relay).
In case of TAL and YAL, use the attached wire harness and change from the wire to it.
The wire is connected between K1R(6), K1R(7), K2R(7), and K3R(6). 〔( ) is shown the terminal.〕
Connect the wiring between the terminal "M3" and the solderless splices butt "M3" of the wire assy.

2P042158A

In case of UATY08～12K

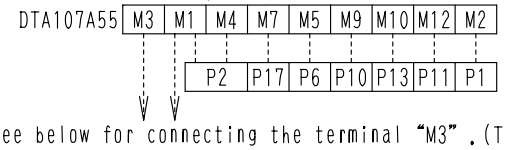

Connect the wiring between the box of this kit and the EL. COMPO. BOX ASSY of the air conditioner. 〔Refer to the wiring diagram of the air conditioner.〕

See below for connecting the terminal "M3". (The Output of alarm signal)
In case of Y1, connect the wiring between the terminal "M1" and the terminal "5" of K2R(magnetic relay).
Connect the wiring between the terminal "M3" and the terminal "3" of K2R(magnetic relay).
In case of Y19, connect the wiring between the terminal "M3" and the terminal "8" of K4R(magnetic relay).
In case of TAL and YAL, use the attached wire harness and change from the wire to it.
The wire is connected between K1R(5), K1R(7), K2R(7), and K3R(5). 〔 ( ) is shown the terminal.〕
Connect the wiring between the terminal "M3" and the solderless splices butt "M3" of the wire assy.

In case of UATY15～21K

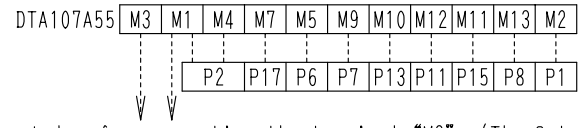

Connect the wiring between the box of this kit and the EL. COMPO. BOX ASSY of the air conditioner. 〔Refer to the wiring diagram of the air conditioner.〕

See below for connecting the terminal "M3". (The Output of alarm signal)
In case of Y1, connect the wiring between the terminal "M1" and the terminal "6" of K2R(magnetic relay).
Connect the wiring between the terminal "M3" and the terminal "4" of K2R(magnetic relay).
In case of Y19, connect the wiring between the terminal "M3" and the terminal "8" of K4R(magnetic relay).
In case of TAL and YAL, connect the wiring between the terminal "M1" and the terminal "6" of K14R(magnetic relay).
Connect the wiring between the terminal "M3" and the terminal "4" of K14R(magnetic relay).

2P042158A

FIELD SETTING

(If optional accessories are mounted on the indoor unit, the indoor unit setting may have to be changed. Refer to the instruction manual for each optional accessory.)

Procedure

①When in the normal mode, press the "TEST" button for a minimum of four seconds, and the FIELD SET MODE is entered.

②Select the desired MODE NO. with the "▲▼" button.

③During group control, when setting by each indoor unit (mode No. 20, 21 and 23 have been selected), push the "UNIT NO." button and select the INDOOR UNIT NO to be set. (This operation is unnecessary when setting by group.)

④Push the "▲" upper button and select FIRST CODE NO.

⑤Push the "▼" lower button and select the SECOND CODE NO.

⑥Push the "SET" button once and the present settings are SET.

⑦Push the "TEST" button for about one second to return to the NORMAL MODE.

(Example) If during group setting and the time to clean air filter is set to FILTER CONTAMINATION - HEAVY, SET MODE NO. to "10," FIRST CODE NO. to "0," and SECOND CODE NO. to "02."

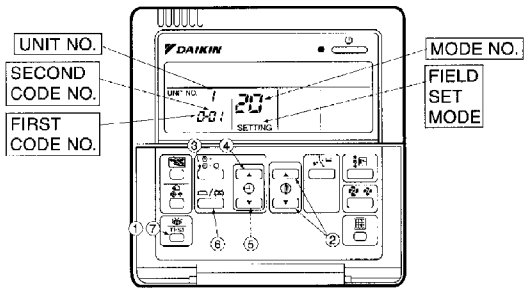

Mode No. Note) 1	FIRST CODE NO.	Description of Setting		SECOND CODE No. Note) 2		
				01	02	03
10(20)	0	Filter Contamination - Heavy/Light (Setting for spacing time of display time to clean air filter) (Setting for when filter contamination is heavy, and spacing time to clean air filter is to be halved)	Ultra-long-life type	Light: Approx. 10,000 hours	Heavy: Approx. 5,000 hours	—
			Long-life type	Light: Approx. 2,500 hours	Heavy: Approx. 1,250 hours	
			Standard type	Approx. 200 hours	Approx. 100hours	
	1	Long-life filter type (Setting of filter sign indication time) (Change setting when Ultra-long-life filter is installed)		Long-life filter	Ultra-long-life filter (1)	—
	3	Spacing Time of Display Time to Clean Air Filter Count (Setting for when the filter sign is not to be displayed)		Display	Do Not Display	—
11(21)	0	Setting Number of Connected Skyair Simultaneous Operation System Indoor Units (Setting for Simultaneous Operation System)		Pair	Twin	—
13(23)	0	High Ceiling Setting (Setting for when installed in a Ceiling higher than 2.7m)		Normal	High Ceiling 1	High Ceiling 2
	1	Selection of Air Flow Direction (Setting for when a blocking pad kit has been installed)		F	T	W
	3	Air Flow Direction Adjust Function (To be set when decoration panel for air outlet is installed)		Equippeed	No Equippeed	—
	4	Air Flow Direction Range Setting		Upper	Normal	Lower
	6	Setting the External Static Pressure (Setting according to the connected duct resistance) (For FHYK, follow the High Ceiling Setting)		Normal (Normal)	High Static Pressure (High Ceiling)	Low Static Pressure —

NOTES) 1. Setting is carried out in the group mode, however, set the mode number inside the ( ) for individual setting of the each indoor unit or confirmation after setting.
2. The SECOND CODE number. is set to "01" when shipped from the factory.
However for the following cases it is set to "02"
• Air flow direction range setting.
3. Do not make any settings not given in the table on the left.
4. Not displayed if the indoor unit is not equipped with that function.
5. When returning to the normal mode, "88" may be displayed in the LCD in order for the remote controller to initialize itself.

2P068938

14

5.6 <DTA103A51> Wiring Adaptor for Other Air Conditioners

5.6.1 Function

This kit contains an I/O interface adaptor for optional controller for centralized control, used when there is a non-connectable air conditioner. When connected to the central control line, this adaptor enables operation/stop and display of operation/error monitors from the optional controller.

5.6.2 Names of Parts and Function

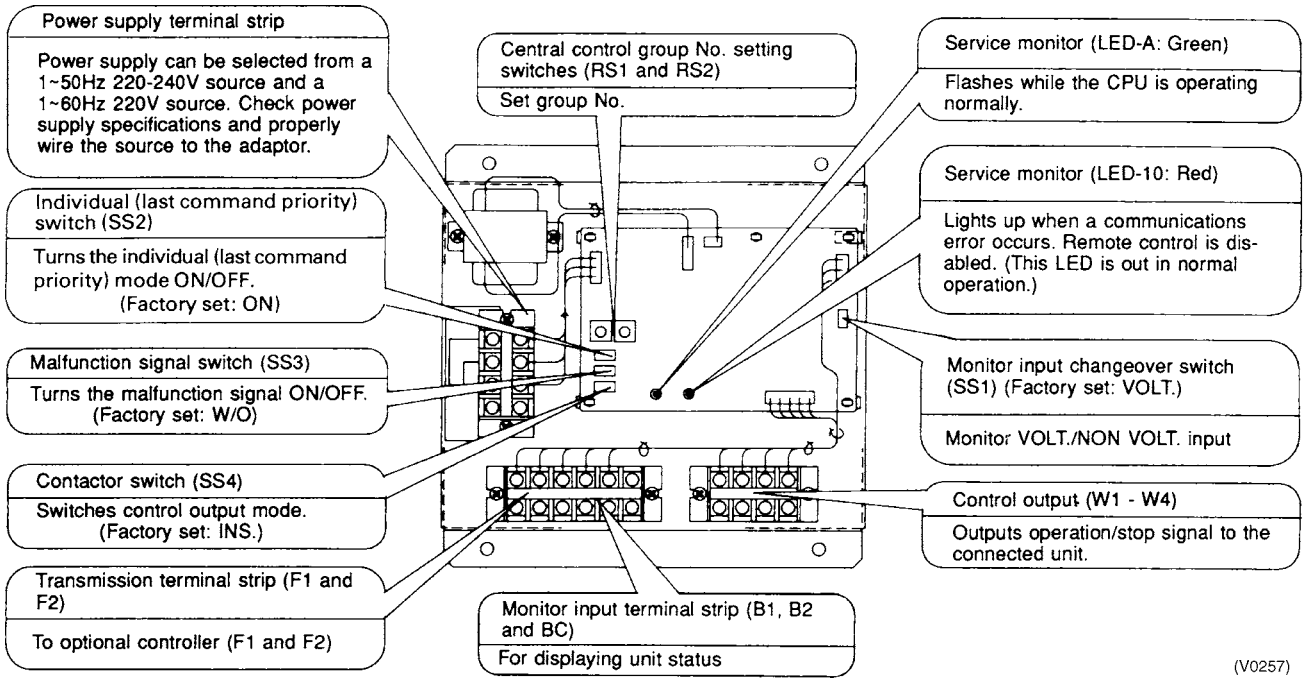

5.6.3 Installation

Securely install the adaptor with the attached installation screw.

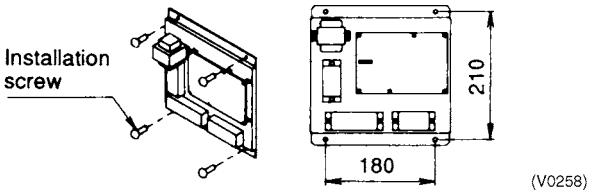

Note:

Install the adaptor inside a control box of outer dimensions: 230W × 230D × 60H.

Supply a control box at site with outer dimensions equal to or larger than those shown below. 230W × 230D × 60H.

5.6.4 Electric Wiring Work

<Wiring Requirements>

1. Wire between the adaptor and central control equipment (F1, F2)
2. Wire to the connected units and set all switches. ... For details, refer to WIRING TO CONNECTED UNITS.
3. Wire to the power supply. ... For details, refer to POWER SUPPLY WIRING.

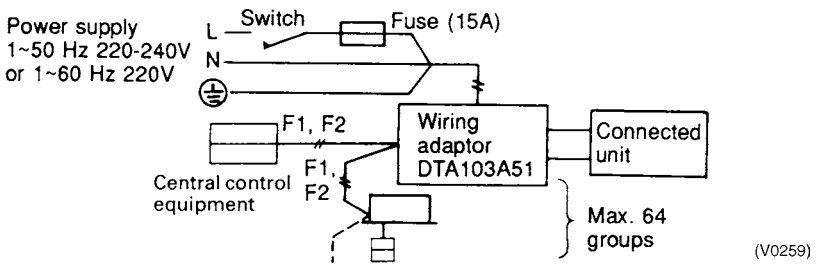

C : 2PA53853

<General Instructions>

- All wiring, components and materials to be procured on the site must comply with the applicable local and national codes.
- Use copper conductors only.
- All field wiring and components must be provided by licensed electrician.
- Unit shall be grounded in compliance with the applicable local and national codes.
- Fit the power supply wiring with a fuse and a switch.
- After wiring work, check power to the equipment shuts OFF when the switch is shut OFF.

<Wiring Specification>

	Type	Size
Power Supply Wiring	H05VV-U3G	(Note 1)
Transmission Wiring	(Note 2)	0.75 - 1.25 mm²

Note:

1. Select the size in electric wire in accordance with the local and national standards.
2. You can use the shielded wire, sheathed vinyl cord or cable (2 conductors). See the installation manual of the optional controllers for centralized control to be connected for further details.

<Wiring to Connected Units>

Control Output

Terminals W1 - W4 are non voltage contacts used in normal operation to output operation display (W1 and W2) and error display (W3 and W4) signals.

Ry1 and Ry2 Contact Specifications		
Voltage	Max. current	Min. Current
1~50Hz 220-240V 1~60Hz 220V	2A	1mA
⎓ 5-24V	3A	1mA

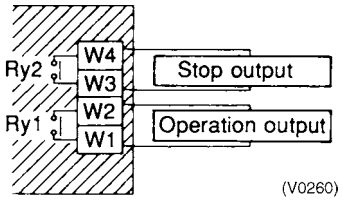

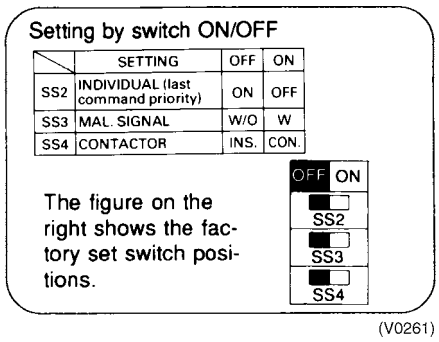

Output modes include instantaneous output and constant output. Mode is changed at the contactor switch (SS4). (Factory set: INS)

C : 2PA53853

14

Monitor Input

Wire as explained here following, depending on whether input carries a voltage (VOLT.) or not (NON VOLT.). Make the VOLT/NON VOLT. setting at the monitor input changeover switch (SS1).

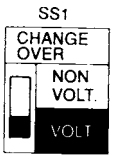

(For Voltage Charged Input)
Set the monitor input changeover switch to VOLT. (Factory set: VOLT.)

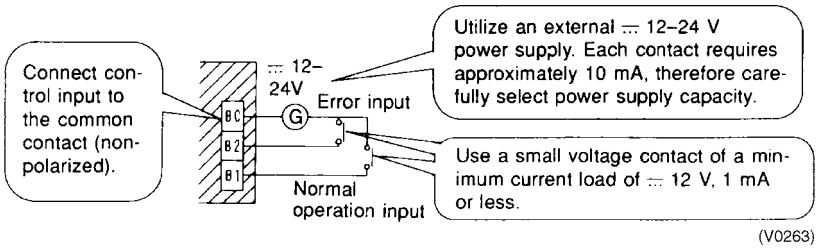

(For Non Voltage Input)
Set the monitor input changeover switch to NON VOLT. (Factory set: VOLT.)

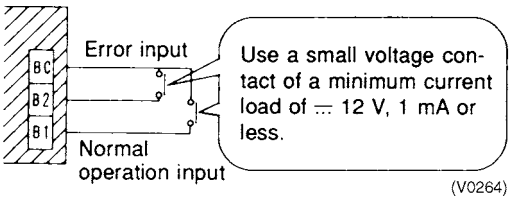

① Switch the malfunction signal switch (SS3) according to needs (Factory set: W/O [OFF]). Set the switch to W (ON) to display errors even if no operation feedback from the indoor unit is available, for example, when power to the indoor unit is OFF. Together, set the individual switch (SS2) to OFF (ON).

Note:

- This switch is ineffective when SS2 is set to ON (OFF).
- The optional controller display will change, as shown on the right, depending on the monitor input state and the malfunction signal switch (SS3) setting.
- After switching the optional controller from stop to operation, it will take from 10 to 30 seconds before the optional controller display will indicate an error.

(SS3) Malfunction Signal	Optional Controller Display at Command Output		
	Monitor Input State		
	Operation Input ON	Operation Input OFF	Error Input ON
W	Operation Display	Error (A1 Display)	Error (A1 Display)
W/O		Operation Display	

2PA53853

② Set the group No. at the central control group No. setting switches (RS1 and RS2). Refer to the below table to set group No. Group No. increases in the order of 1-00, 1-01 ... 1-15, 2-00, ... 4-15. Refer to the installation manual of the optional controller.

RS1 Switch Setting and Upper Group No. Position

Position	0	1	2	3	4	5	6	7	8	9
Group No.	—	1	2	3	4	—	—	—	—	—

RS2 Switch Setting and Lower Group No. Position

Position	0	1	2	3	4	5	6	7	8	9	A	B	C	D	E	F
Group No.	00	01	02	03	04	05	06	07	08	09	10	11	12	13	14	15

Make Settings before Turning ON The Power.

Note:
Group number need not be set on this adaptor during individual use with either a wiring adaptor for electrical appendices or a schedule timer. Setting is automatic.
Ex. Setting group No. 1-15
First and second group No.s are indicated as below.

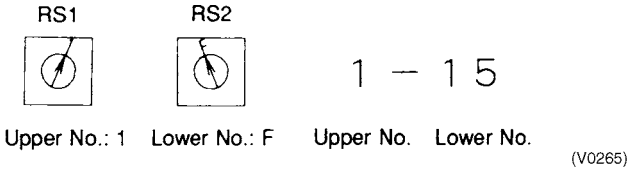

Power Supply Wiring

Power supply can be selected from a 1~50 Hz 220-240V source and a 1~60 Hz 220V source. Check power supply specifications and properly wire the source to the adaptor.

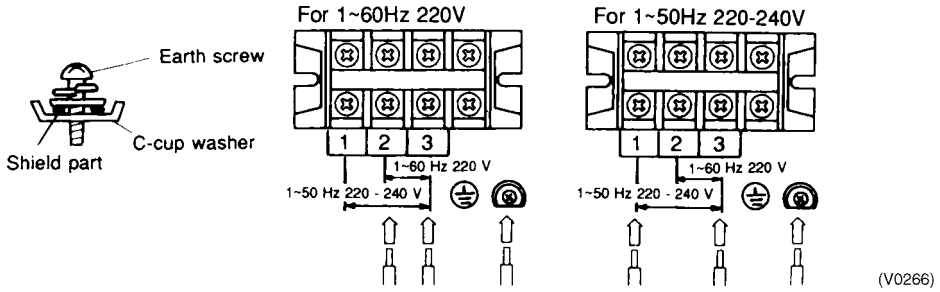

Note:
- Ground wires as shown in the figure on the right.
- The adaptor may malfunction or be damaged if improperly wired.
- The fuse is designed for short-circuit protection (Overcurrent protection). Therefore, it may not offer sufficient protection against improper voltage.

2PA53853

14

5.7 <DTA104A61 / DTA104A62 / DTA104A53> External Control Adaptor for Outdoor Unit (Must be Installed on Indoor Units)

Accessories Check the following accessories are included in the kit before the installation.

External control adaptor for outdoor unit × 1

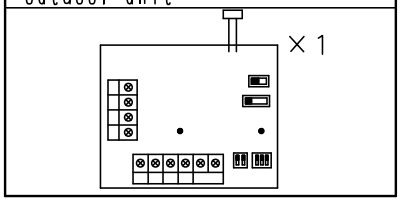

PCB support	× 4
Clamp	× 3
Installation manual	× 8

NOTES
- The kit type (DTA104A61 • 51 type, DTA104A62 • 52 type, DTA104A53 type)varies according to air conditioner model.
- The installation box for adaptor PCB are required with the following air conditioner models.

FXC(Q), FXYCP ····· KRP1B96
FXF(Q) ····· KRP1D98
FXH(Q), FXYHP ····· KRP1C93
FXA(Q) ····· KRP4A93
FXD(Q) ····· KRP1B101

1 General description of system

With the external control adaptor, outdoor units are controlled as follows.
1. Operation mode (COOL/HEAT/FAN)is switched simultaneously for more than one outdoor unit.
   - If switching operation mode by indoor unit remote controller or COOL/HEAT selector.
   - Except RSEY(P)~KJ

☒ External control adaptor for outdoor unit
┴ Indoor unit remote controller

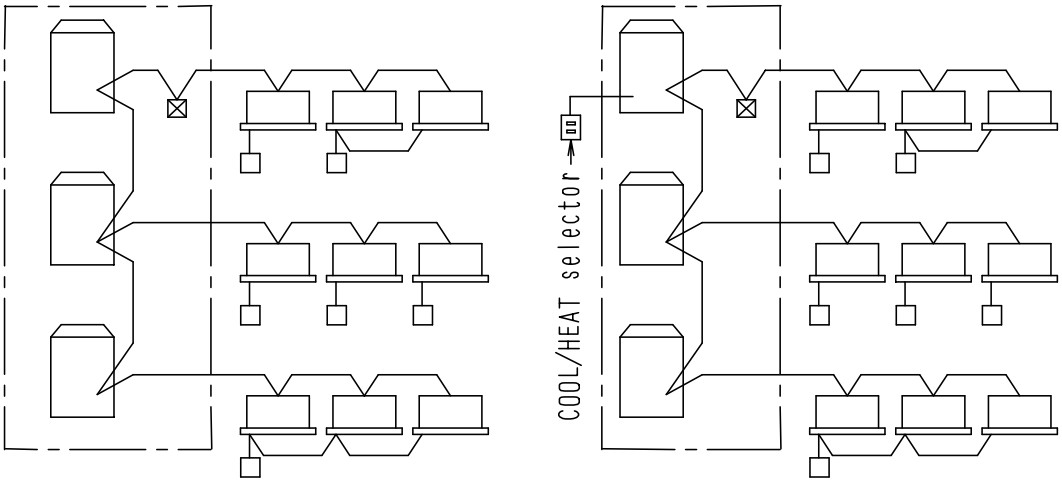

You can simultaneously switch operation mode for outdoor units in [ ].

C : 1PA63164D

2. Demand control and low-noise control are executed simultaneously for more than one outdoor unit.

• Except RSEY(P)~KJ

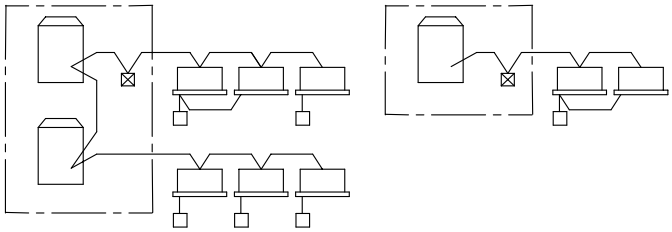

Demand control and low-noise control are executed simultaneously for outdoor units in [ ]

❷ Names of parts and functions

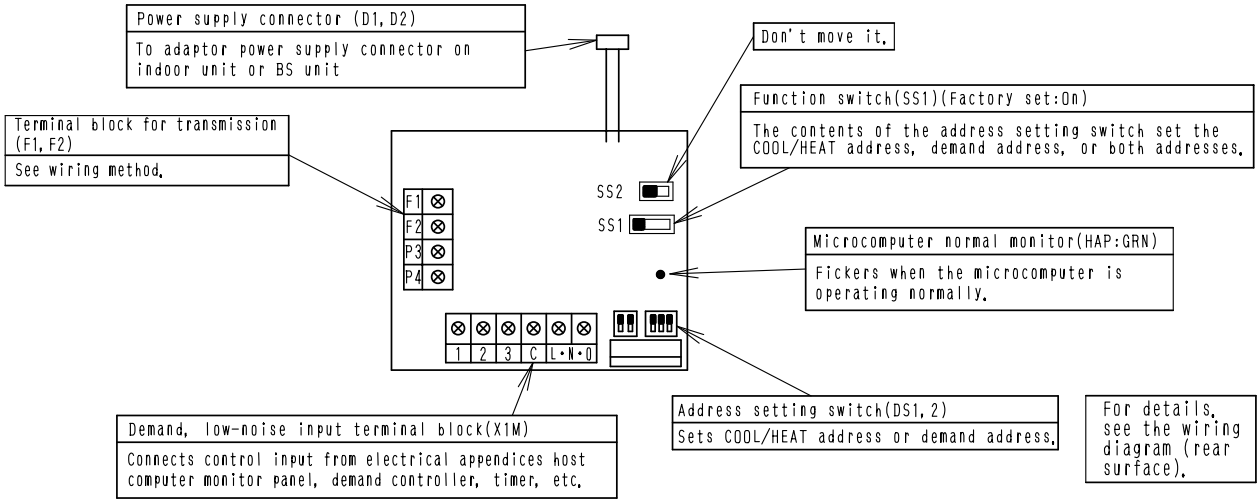

C : 1PA63164D

14

❸ Installation

• Install the adaptor inside the control box of indoor unit of same refrigerant circuit.
• If installing on a BS unit, install the adaptor inside the control box of the BS unit.

BS Unit

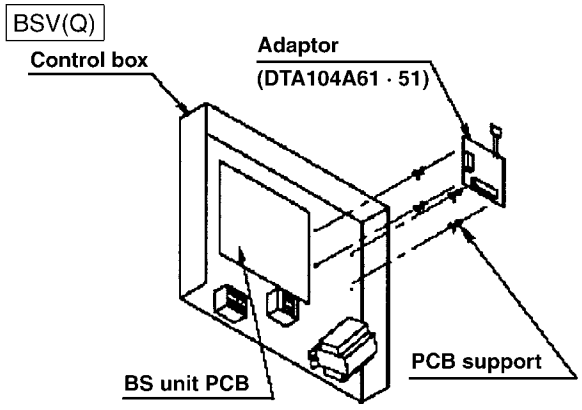

Ceiling Mounted Cassette Corner Type

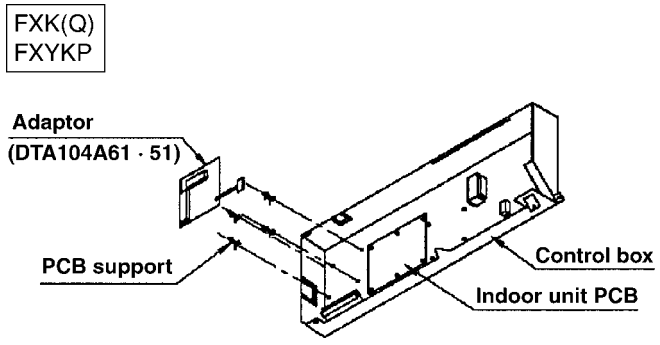

Ceiling Mounted Cassette Type (Double-Flow)

FXC(Q)
FXYCP

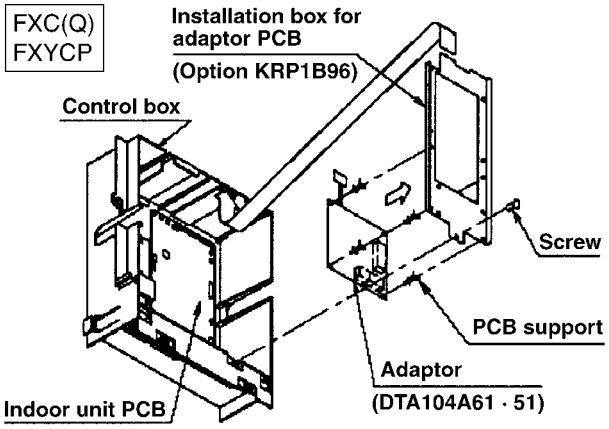

NOTE : Installation box for adaptor PCB is required to install the adaptor.

Ceiling Mounted Built-In Type

FXS(Q)
FXYSP
FXYB

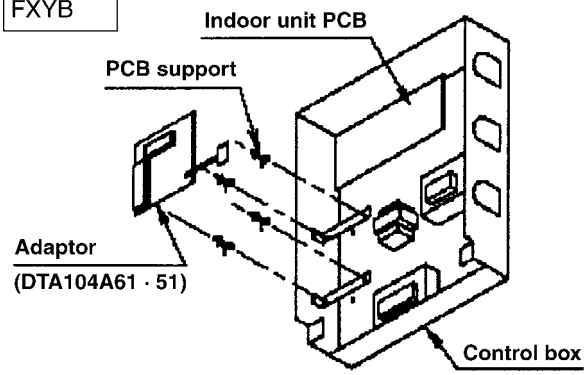

Slim Ceiling Mounted Duct Type

FXD(Q)

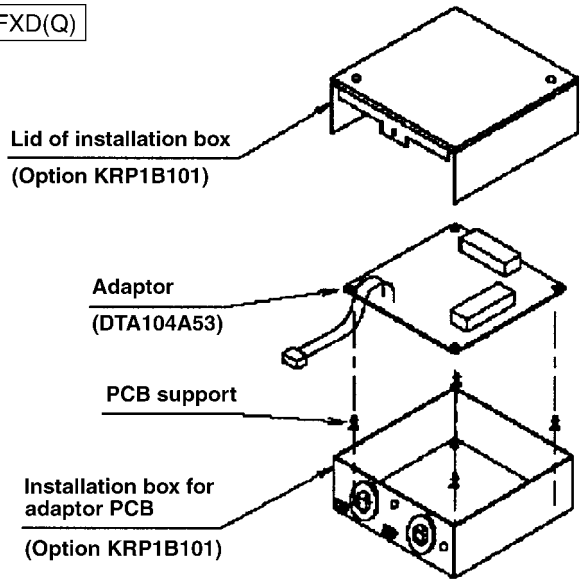

NOTE : Installation box for adaptor PCB is required to install the adaptor.

Ceiling Mounted Duct Type

FXM(Q)40~125
FXYMP40~125

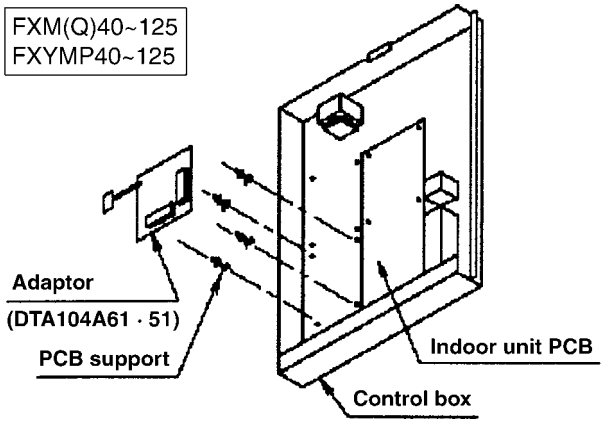

FXM(Q)200 · 250
FXYMP200 · 250

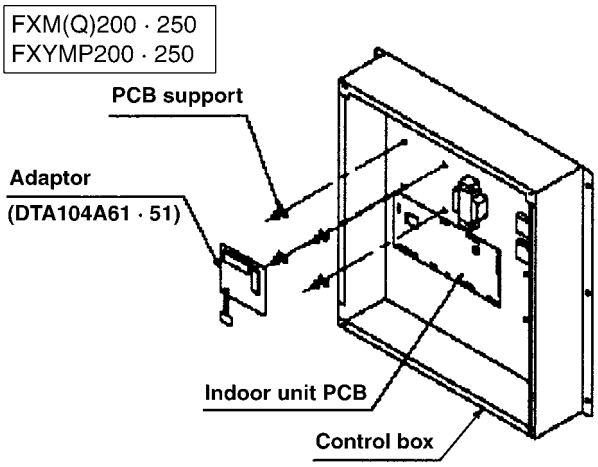

C : 1PA63164D

Ceiling Mounted Cassette Type (Multi-Flow)

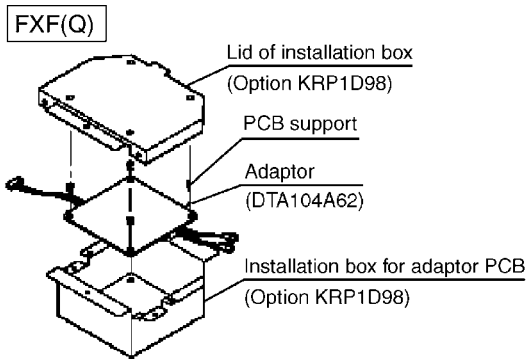

Note:
Installation box for adaptor PCB is required to install the adaptor.

Ceiling Suspended Type

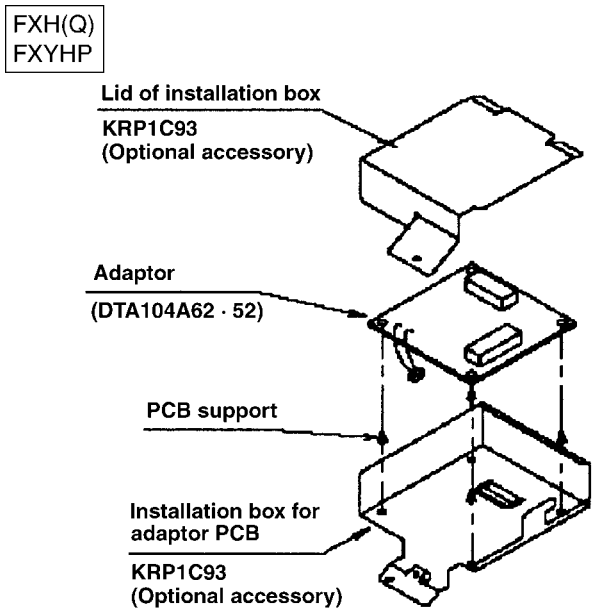

NOTE : Installation box for adaptor PCB is required to install the adaptor.

Wall Mounted Type

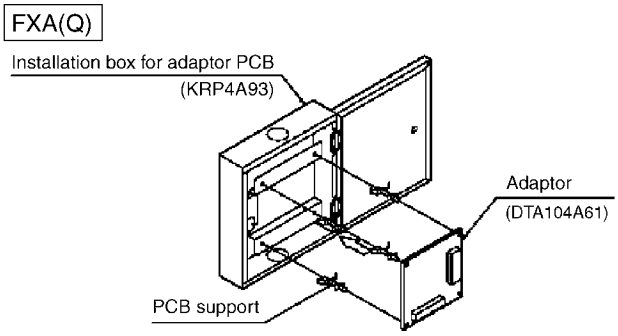

Floor Standing Type

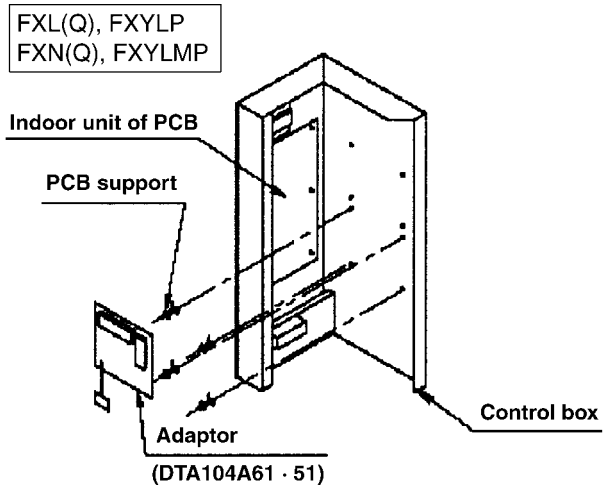

Ceiling Mounted Duct Type

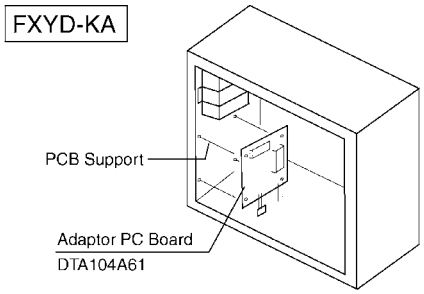

C : 1PA63164D

14

④ Electrical wiring

① Connect the power supply wiring from the adaptor to the adaptor power supply connector on the PCB of the Indoor unit or BS unit.
② Connect the transmission wiring to the various terminal blocks, and to the F1 and F2 terminals on the PCB. (Use double-core wiring with no polarity.)
③ Using the attached wiring ties, clamp the transmission wiring to weak field wiring, etc.

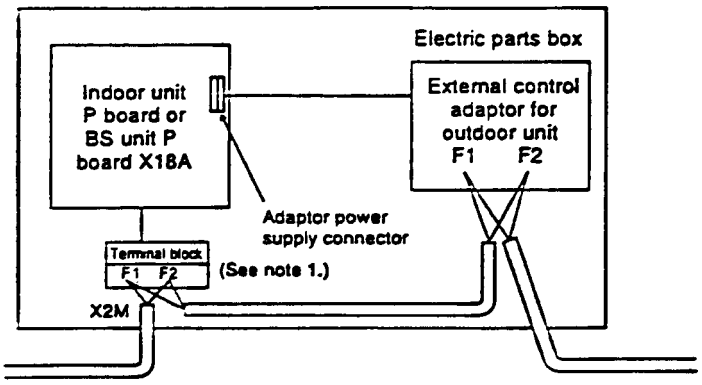

Note 1: If mounting on a BS unit, connect the BS unit's terminal block (F1 and F2, indoor unit side) with F1 and F2 of the adaptor.

NOTES

- (Transmission wiring specifications)

Sheathed wire
(2 wire)
0.75 ~ 1.25 mm^2

- (Transmission wiring length)

Malfunction of transmission may occur if the following limits are exceeded.
(Total wiring length: Max. 1000 m
No. of branches: Max. 16)

④ If carrying out demand or low-noise input, connect the adaptor's terminals as shown below.

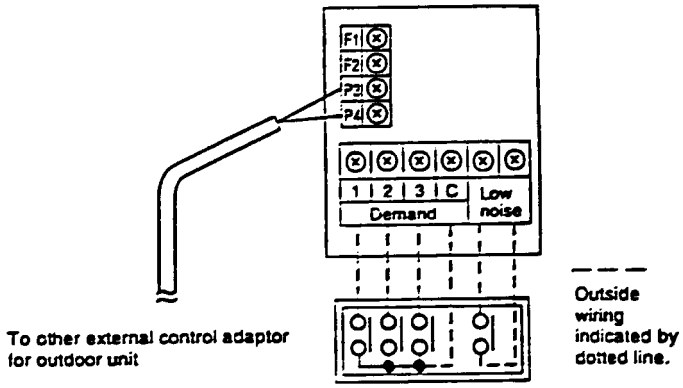

(V0272)

[Input signal]
Constant a contact
Input current is approx. 10 mA per contact.
For the relay contact, use a weak current contact.

[Outside wiring specifications]
Recommended wiring: 0.75-2 mm^2 sheathed wire
Wiring length: Within 150 m
Keep a minimum 50 mm from power supply wiring to prevent malfunction.

Demand input terminal
Short circuit between (Demand 1) - (C)...As a guideline, demand should be about 70%.
Short circuit between (Demand 2) - (C)...As a guideline, demand should be about 40%.
Short circuit between (Demand 3) - (C)...Forced thermo OFF

Low-noise input terminal
When terminals are short-circuited during cooling, capacity save (outdoor unit fan low-speed turn, compressor frequency control) is carried out.
use only at night when load is slight.

How to set demand control in the field
1. Outdoor unit field setting
- Setting mode 1...Turn ON low noise control as explained in the outdoor unit's service manual.
- Setting mode 2...Match low noise and demand addresses to the external control adaptor address.

2. External control adaptor settings
- Function switch (SS1)
  Set SS1 to either "BOTH" or "DE".
- Address setting switch (DS1,DS2)
  Match DS1 and DS2 to the low noise and demand addresses of the outdoor unit.

5 Field settings

1. The contents of the various settings for unified switching of the operation mode (cool, heat, fan) are as follows.

Setting switches cannot be switched unless the power is turned on. Be sure, therefore, to turn the power off after switching the switches.

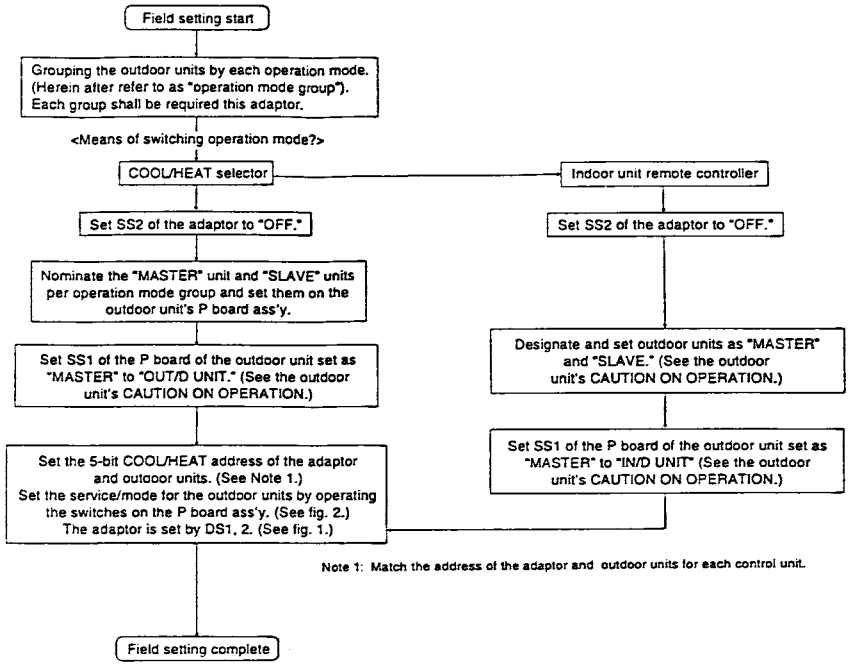

(V0273)

14

2. The contents of the various settings for unified switching of demand and low noise operation are as follows.

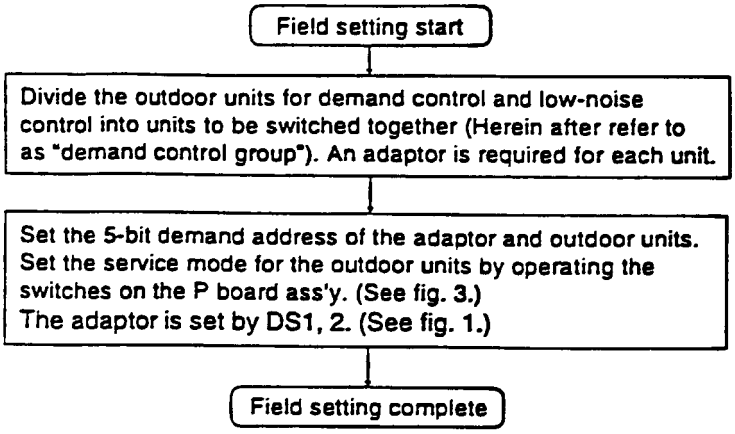

3. To carry out operation mode switching and demand control simultaneously

You can carry out operation mode switching and demand control simultaneously by setting function switch SS1 on the adaptor to "BOTH." Only one address, however, can be set on the adaptor, so the "operation mode switch unit" and "demand control unit" are the same.

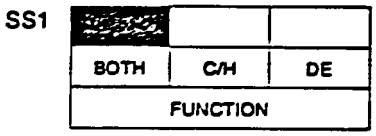

Factory set to "BOTH."

Set the COOL/HEAT address, demand address and low noise address, or both as needed.

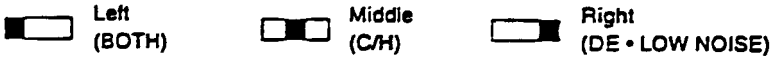

Note 2: The outdoor unit can have an independent "COOL/HEAT address" and "demand address". You can therefore set the "operation mode group" and "demand control group" to different ranges.

(V0274)

Fig. 1 Setting of 5-bit cool/heat address by DS1,2

Designate and set cool/heat addresses 0-31 for each operation mode switch unit.

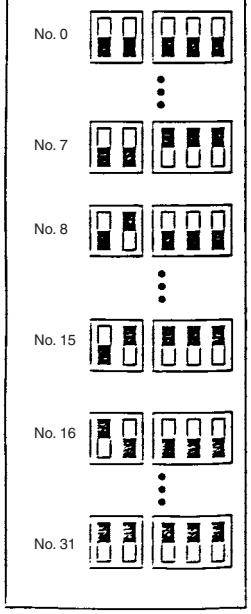

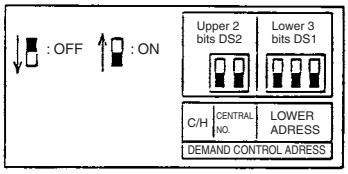

Fig. 2 (Ex.) To set the outdoor unit's cool/heat address to No. 15 :

●—Off ○—On ◑—Flicker

Procedure	Setting contents	MODE	TEST	5-bit				
				C/H SELECT			L.N.O.P.	SEQ. START
				IND	MASTER	SLAVE		
When power turned on	Setting mode (factory set)	● LED20	● LED21	○ LED22	● LED23	● LED24	● LED25	○ LED25
Hold down next page button for 5 sec.	Enters address setting.	○ LED20	● LED21	● LED22	● LED23	● LED24	● LED25	● LED25
Push operation button one time.	Enters cool/heat address setting.	○ LED20	● LED21	● LED22	● LED23	● LED24	● LED25	○ LED25
Push confirmation button one time.	Make sure cool/heat address has been entered.	○ LED20	● LED21	● LED22	● LED23	● LED24	● LED25	● LED25
Push operation button 15 times. (Address No. = Times pushed)	Sets cool/heat address.	○ LED20	● LED21	● LED22	◑ LED23	◑ LED24	◑ LED25	◑ LED25
Push confirmation button two times.	Check cool/heat address.	○ LED20	● LED21	● LED22	● LED23	● LED24	● LED25	● LED25
Push next page button one time.	Returns to set mode.	● LED20	● LED21	○ LED22	● LED23	● LED24	● LED25	○ LED25

Fig. 3 (Ex.) To set the outdoor unit's demand address to No. 7 :

●—Off ○—On ◑—Flicker

Procedure	Setting contents	MODE	TEST	5-bit				
				C/H SELECT			L.N.O.P.	SEQ. START
				IND	MASTER	SLAVE		
When power turned on	Setting mode (factory set)	● LED20	● LED21	○ LED22	● LED23	● LED24	● LED25	○ LED25
Hold down next page button for 5 sec.	Enters address setting.	○ LED20	● LED21	● LED22	● LED23	● LED24	● LED25	● LED25
Push operation button two times.	Enters demand address setting.	○ LED20	● LED21	● LED22	● LED23	● LED24	○ LED25	● LED25
Push confirmation button one time.	Make sure demand address has been entered.	○ LED20	● LED21	● LED22	● LED23	● LED24	● LED25	● LED25
Push operation button 7 times. (Address No. = Times pushed)	Sets demand address.	○ LED20	● LED21	● LED22	● LED23	◑ LED24	◑ LED25	◑ LED25
Push confirmation button two times.	Check demand address.	○ LED20	● LED21	● LED22	● LED23	● LED24	● LED25	● LED25
Push next page button one time.	Returns to set mode.	● LED20	● LED21	○ LED22	● LED23	● LED24	● LED25	○ LED25

5.8 <KRP1B61 / KRP1B56 / KRP1B59> Adaptor for Wiring

Accessories Check if the following accessories are included in the kit.

Adaptor ×1

PC board support	×4
Clamp	×3
Installation manual	×1

Notes
- Kits vary according to applicable models.
- A special adaptor fixing plate and box are required for the following models.
  FXCQ, FXYC, FXYCP · · · · KRP1B96
  FXYFP · · · · · · · · · · · · · · · KRP1C98

1 NAMES OF PARTS

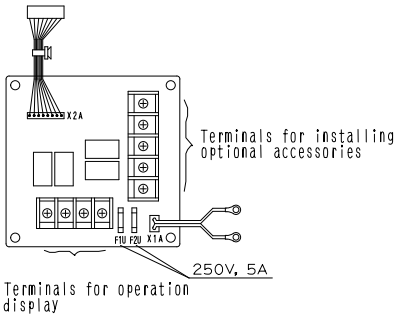

2 ELECTRIC WIRING

- Refer to the WIRING DIAGRAM attached to the indoor unit before attempting to wire.
  (Make sure wires to units do not pass over the PC board when wiring.)
- Wire the adaptor to the indoor unit as shown below.

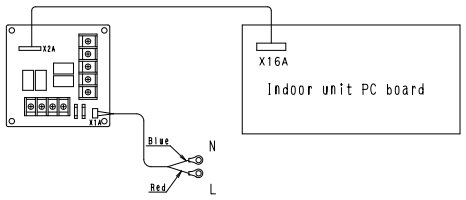

① Fetching the operation display signal

- Attaching an hour meter

Output is generated at the contact while the compressor is running.

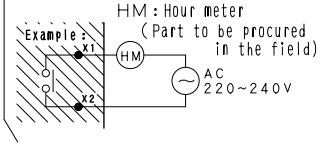

- Fan ON display

Output is generated at the contact while the fan is running.

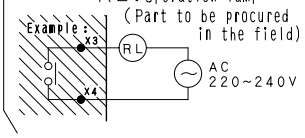

② If optional accessories are installed(auxiliary electric heater, humidifier)
- Wire correctly in accordance with the attached installation manual.
- Refer to the wiring diagram applied to the indoor unit when running electric wiring.

3 INSTALLATION

- Installation differs according to models as shown below.
- Do not bundle low and high voltage wires together.
- Bundle any excess wires with the attached clamps so as to keep loose wirings off the indoor unit PC board.

<Ceiling mounted cassette type>
FXC (Q) FXYCP (Double-flow model)

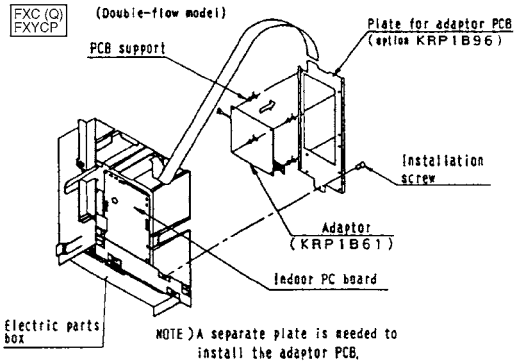

<Ceiling mounted cassette type>
FXK (Q) FXYKP (Corner model)

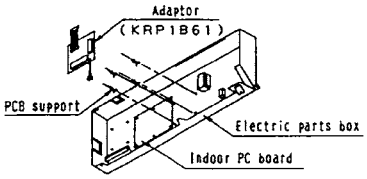

<Ceiling mounted built-in type>
FXS (Q) FXYSP FXYB

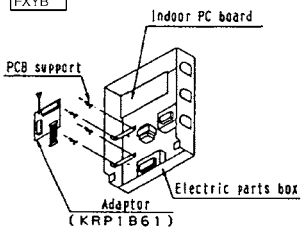

Note : Installation box is necessary for second adaptor (FXS).

<Ceiling mounted duct type>
FXM (Q) 40~125 FXYMP40~125

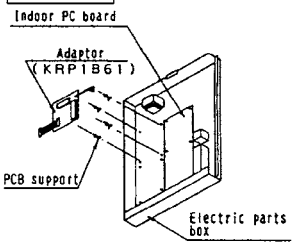

FXM (Q) 200 · 250 FXYMP200 · 250

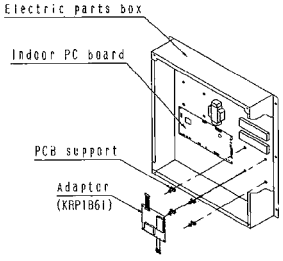

Ceiling mounted super cassette type <Multi-flow type>
FXYF (P)

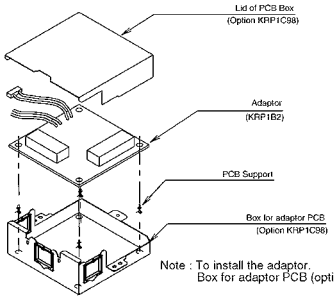

Note : To install the adaptor. Box for adaptor PCB (option) is required.

<<Ceiling-mounted low silhouette duct type>>
FXYD-KA

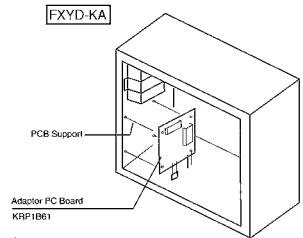

Note : Installation box is necessary for second adaptor

<Floor-standing type>
FXL (Q), FXYLP FXN (Q), FXYLMP

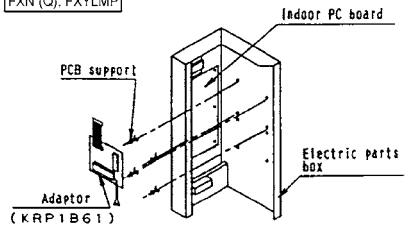

C : 2PA61563C

Adaptor for wiring installation manual

KRP1B51·54·56·57·59 KRP1BA54·57·59

Accessories Check if the following accessories are included in the kit.

Adaptor ×1

PCB support	×4
Clamp	×3
Installation manual	×1

NOTE
- Kits vary according to applicable models.
- A special adaptor fixing plate and box are required for the following models.

FHYCP–D, FXF(Q) ..... KRP1D98 · KRP1DA98
FH(Y)C(P)–B ..... KRP1C98 · KRP1CA98
FH(Y)C–K KRP1B98
FH(Y)(P), FHQ, FXHQ ..... KRP1C93 · KRP1CA93
FV(Y) KRP4A95
FFQ, FXZQ, FXD(Q) ..... KRP1B101 · KRP1BA101

1 NAMES OF PARTS

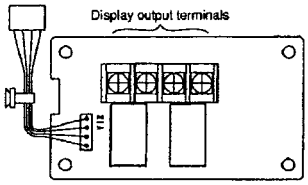

2 ELECTRIC WIRING

- Refer to the WIRING DIAGRAM attached to the indoor unit before attempting to wire. [Make sure wires to units do not pass over the PC board when wiring]
- Wire the adaptor to the indoor unit as described below.

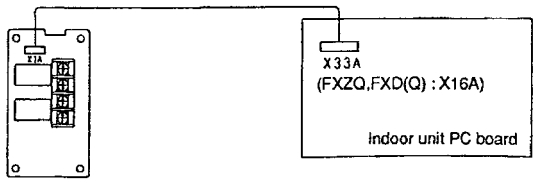

○ Fetching the operation display signal

• Attaching an hour meter

Output is generated at the contact while the compressor is running.

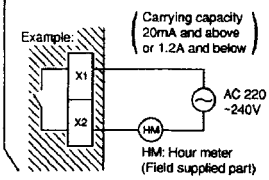

• Fan ON display

Output is generated at the contact while the fan is running.

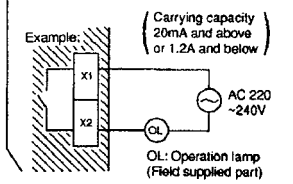

3 INSTALLATION

- Installation differs according to models as shown below. Do not bundle low and high voltage wires together.
- Bundle any excess wires with the attached tie wraps so as to keep loose wirings off the indoor unit PC board.

《Ceiling-mounted cassette type》

FHYCP–D
FXF(Q)
(Multiflow type)

NOTE: Installation box for adaptor PCB is required to install the adaptor.

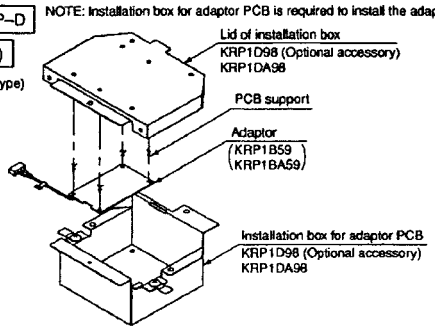

《Ceiling-mounted cassette type》
《Ceiling-mounted Duct type》

FFQ
FXZQ
(600×600 Multiflow type)
FXD(Q)
(Ceiling-mounted Duct type)

NOTE: Installation box for adaptor PCB is required to install the adaptor.

Lid of installation box
KRP1B101 · KRP1BA101
(Optional accessory)

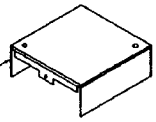

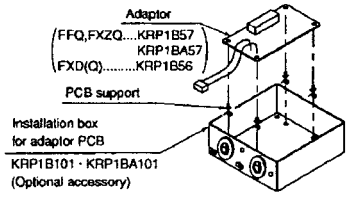

《Ceiling-mounted cassette type》

FH(Y)K(P) (Corner type)

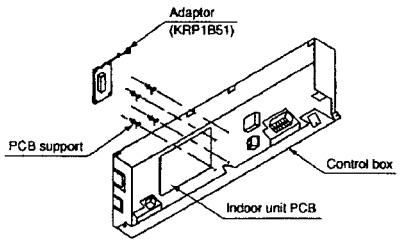

《Ceiling-mounted cassette type》

FH(Y)C–B
FCQ
(Multiflow type)

NOTE: Installation box for adaptor PCB is required to install the adaptor.

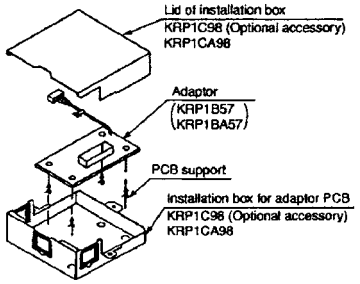

《Ceiling-mounted cassette type》

FH(Y)C–K
(Multiflow type)

Insert the edge of the adaptor into the groove in the adaptor box.

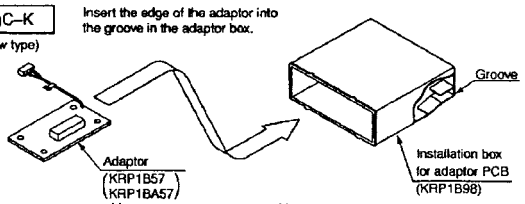

《Floor-standing type》

FV(Y)

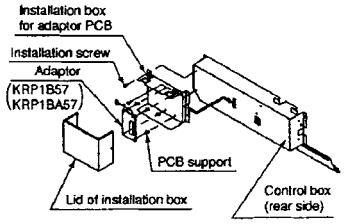

NOTE: Installation box for adaptor PCB is required to install the adaptor.

《Ceiling-mounted built-in type》《Duct type》

FH(Y)B(P)
FD(Y)M

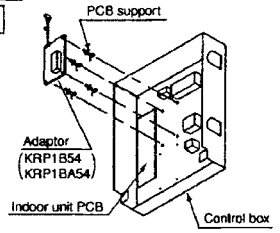

《Ceiling-mounted built-in type》

FBQ
FH(Y)B(P)–B

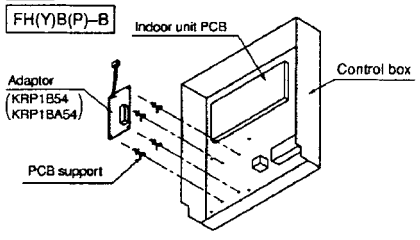

《Ceiling suspended type》

FH(Y)(P)–B
FHQ · FXH(Q)

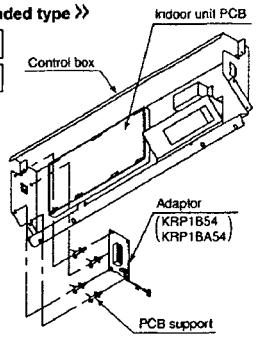

1PA60037E

14

5.9 <KRP1C3> Adaptor for Wiring

1. Contents of kit

Prior to installation check whether you have the complete kit of parts as shown below including the installation manual.

Names of parts

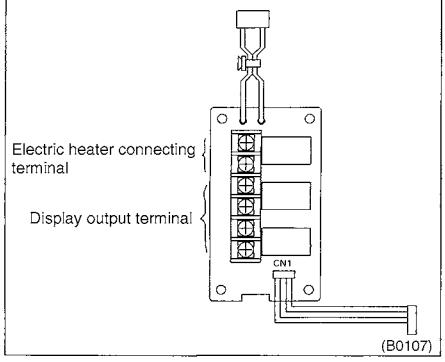

Plastic strap	3 pieces
Installation manual	1 piece
PCB Support *	4 piece

* for Ceiling Suspended Type

2. Electrical wiring

- Refer to the wiring diagram of the indoor unit for its wiring connection. (Make sure all the wiring to the unit should not go over the PC board.)
- Connect the wiring to the indoor unit as shown below.

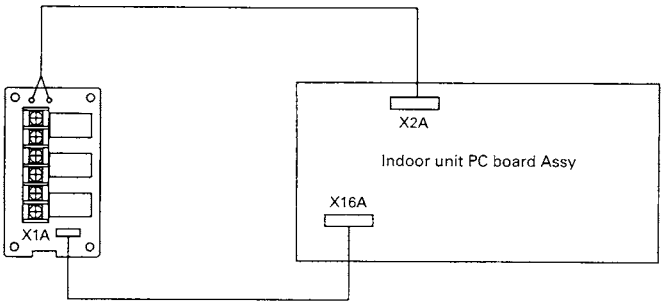

①To detect the operation display signal

- Installation of the watt-hour meter

Output signal to detect the operation of the compressor

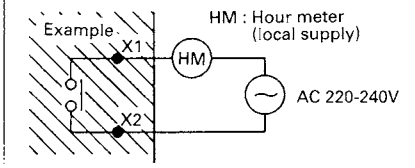

- The fan display signal

Output signal to detect the operation of the fan

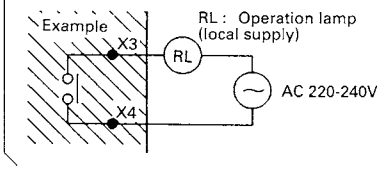

②In case the electric heater is installed

- Connect the wiring properly according to the installation manual included in the kit.
- Refer to the wiring diagram of the indoor unit for its wiring connection.

3. Installation

- Never bundle high and low voltage wiring together.
- Be sure to bundle the excess wring with the attached plastic strap so as to keep the loose wiring off the indoor unit PC board.

< Ceiling Suspended Type >

FXH(Q)

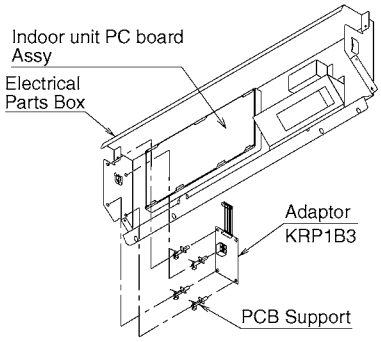

(V2443)

JC : 2PA58148A

5.10 <KRCS01-1> Remote Sensor

The built-in temperature control thermistor of the indoor unit is mounted in the intake port of the main body. Some difference can occur between the temperature setting of the built-in thermistor and the actual indoor temperature. In such case, remove the thermistor from the indoor unit and remount it near the living area so that the remote sensor can sense the temperature of the living area.

Models for remote sensor application

This kit can be used for all indoor units in the Skyair series and the VRV series.
Examples:
Skyair: FHYC
VRV: FXYC
If you are unsure if this kit can be used with your particular indoor unit, check the type of thermistor (inlet air temperature sensor).

The type of thermistor is ST8601.
It is shaped as shown below.

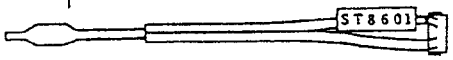

<1> Kit components
This kit includes the following components.

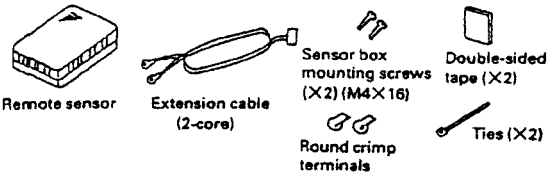

<2> Mounting

i) Selecting the mounting position
The remote sensor incorporates a thermistor to sense the temperature. Select mounting position carefully on the basis of the following considerations.

① A location with an average temperature for the room being air conditioned
② Out of direct sunlight
③ Away from the influence of other heat sources
④ Not directly exposed to the outlet air from the air conditioner
⑤ Not directly exposed to the air entering the room when a door is opened.

ii) Mounting

① Surface mounting

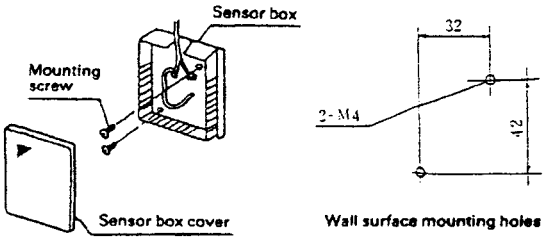

- Break out the wiring hole tabs in the sensor box using nippers or a similar tool.
- Screw the sensor box securely to the wall surface. (2 points)
- Wire to the electronic control unit in the indoor unit by first removing the existing thermistor (inlet air temperature sensor) and connecting the extension cable in its place.
  (The existing thermistor is no longer required.)

② Embedded wiring

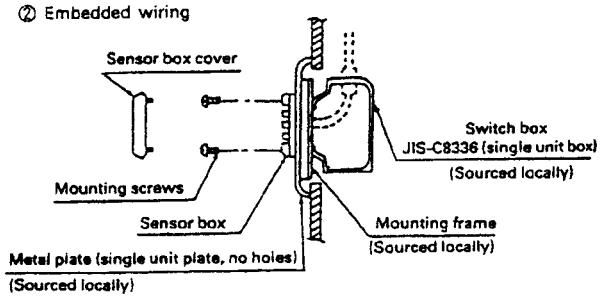

- Make sensor box mounting holes in a metal plate (sourced locally) as shown on the right. Screw the sensor box firmly into position.

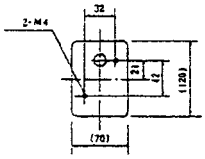

Metal plate holes machined locally

Warning: Make sure not to cover the air holes in the sensor box.

<3> Wiring guide
Use the extension cable provided to wire from the remote sensor to the electronic control unit in the indoor unit.

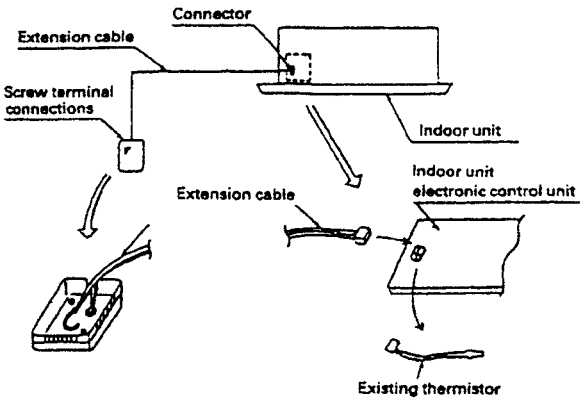

- Wire to the electronic control unit in the indoor unit by first removing the existing thermistor (inlet air temperature sensor) and connecting the extension cable in its place.
  (The existing thermistor is no longer required.)
- The position of the thermistor used for sensing the inlet air temperature is different according to the type of indoor unit. Check the wiring diagram for the indoor unit to make sure that you do not accidentally remove the wrong wiring.
- In the indoor unit switchbox, use the same wiring clamps for the extension cable as were used for the existing thermistor.
- If the extension cable is far too long, cut it to the appropriate length, strip the coating and fit the round crimp terminals provided. (Do not cut the cable at the connector end.)
- Push the sensor box cover onto the sensor box.

<Cautions for wiring>

Removing the sensor box cover

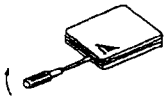

Remove the cover from the sensor box using a flat screwdriver inserted in the slot in the sensor box and the cutout in the upper case.
(Under normal circumstances, do not remove the cover from the sensor box.)

1. Install the extension cable so that it will not be affected by nearby power cables or similar sources of noise.
   (Noise may cause malfunctioning.)
2. Make sure that wiring connections are correct and secure.
   Poor contact at the connections may mean that the room temperature is sensed incorrectly and cause problems.

<4> Operation test after mounting the sensor
Conduct operation tests of cooling and heating after mounting the sensor and completing the wiring.

3P011730B

5.11 <DTA109A51> DIII NET Expander Adaptor

Accessories Check the following accessories are included in the kit before the installation

Adaptor ×1

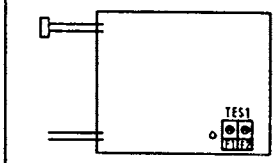

PCB support	×4
Clamp	×3
Installation Manual	×1

NOTE This adaptor does not apply to salt damage resistsnce.

1 General description of system

The adaptor allows easy system expansion as long as restrictions are observed.

1. The below systems can be controlled on the Super Wiring System when using the adaptor.

(1) Up to 1024 units can be centrally controlled in 64 different groups. (With 2 central remote controllers, up to 1024 units can be controlled in 128 groups.)

Restrictions on the number of units that can be connected to the Super Wiring System apply to each adaptor.

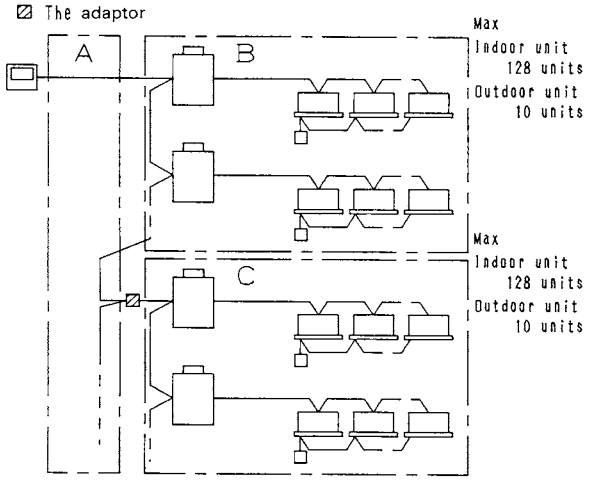

A maximum of 128 indoor units and 10 outdoor units can be connected in each group B and C.

(2) Wiring restrictions (max. length : 1000m, total wiring length : 2000m, max. number of branches : 16) apply to each adaptor.

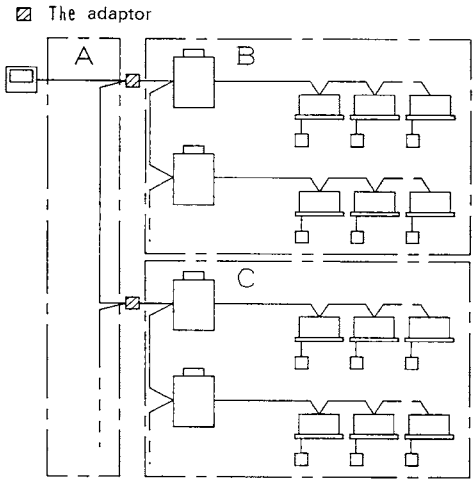

Each group A, B and C can have a maximum wiring length of 1000m, total wiring length of 2000m and a maximum 16 branches.

(V0285)

1P013360

(3)Setups risky for centralized control systems are possible.

Conventional System Misswiring such as apply 220-240V to circuits could possibly shut down the entire system.

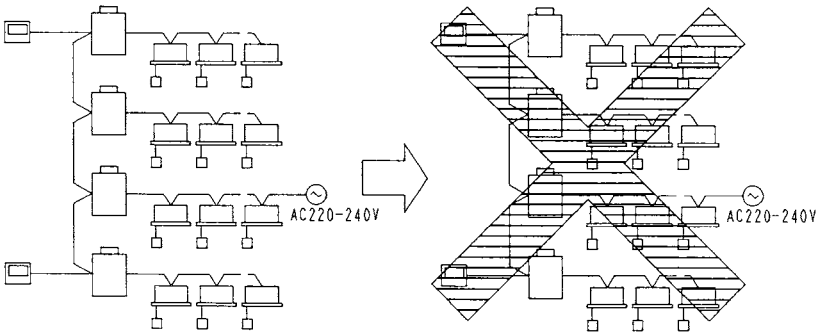

With the adaptor Should trouble occur, only units below the adaptor are shut down. Thus, it is possible to avoid a total system shutdown.

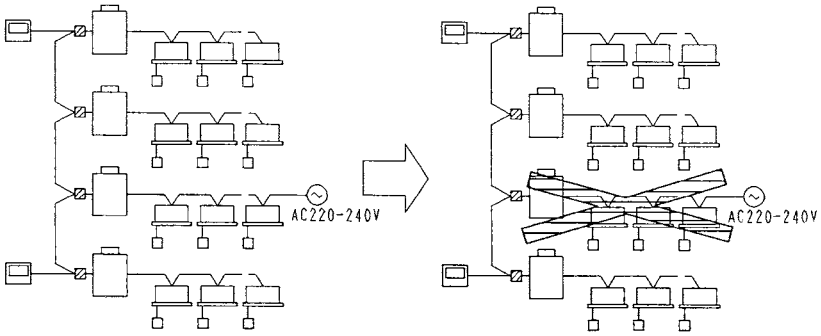

② Names of parts and functions

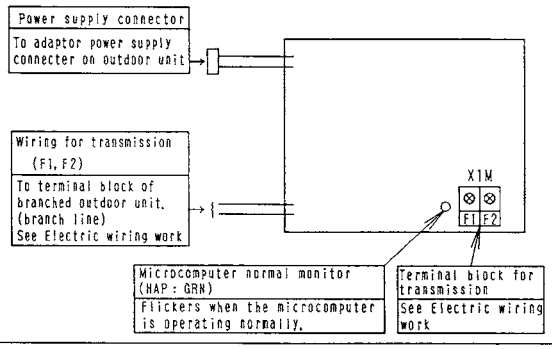

1P013360

14

❸Electric wiring work

(1)Connect the wire from the adaptor to the adaptor power connector on the outdoor unit's PC board.
(For connector No.s, see the electric wiring diagrams for the indoor and function units.)
(2)Connect transmission wires between outdoor units (Outdoor-Outdoor terminal board).
(3)Wire transmission wires to terminal boards as shown below.

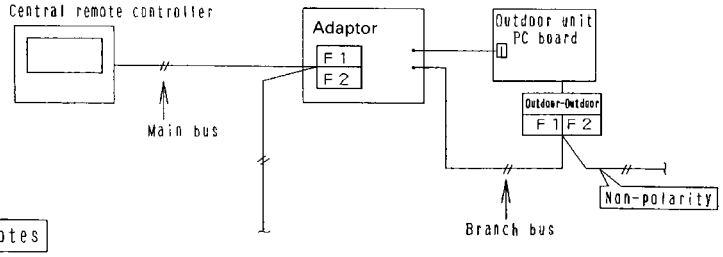

Notes

(Transmission wiring specifications)
- 0.75～1.25mm² sheathed wire (2 wire).

(Transmission wiring length)
- Observe the following limits on transmission wires. The limits apply to each adaptor. If you exceed the limits, it may cause malfunction.
  (Total length : 2000m
  Max. length···1000m
  Max. number of branches : 16)
- At least one outdoor unit and one optional controller for centralized control are required for every main bus and branch bus.
- Up to 8 adaptors can be connected in one system.
- Do not locate adaptors downstream of other adaptors(i.e. : on a branch bus).
- If not used with a central control device, the expander adaptor cannot be used with the wiring adaptor for electrical appendices(KRP2A) or the schedule timer(DST301B51).
- The external control adaptor for outdoor units controls group cooling and demand for each adaptor. (Anything beyond the expansion control falls outside the control domain.)
- Do not turn the system ON/OFF rapidly from the optional controller for centralized control. This can cause temporary erroneous displays.
- Sequential starts is controlled by each expander adaptor.

❹Wiring example

System with more than 10 outdoor units.

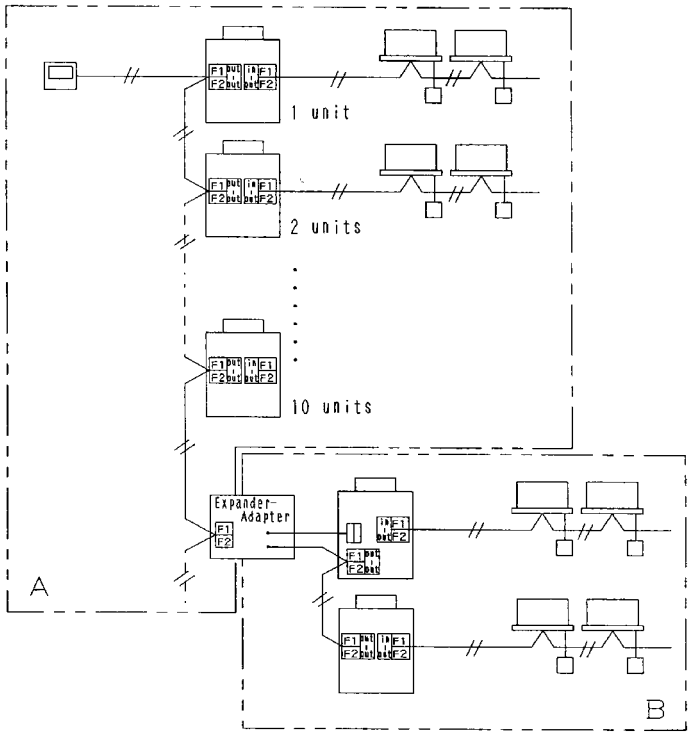

Note Wiring restrictions (see"Electric wiring work") apply to each group A and B.

C : 1P013360

6. Control Functions

6.1 <BRC1C62> Wired Remote Controller

6.1.1 Name and Function

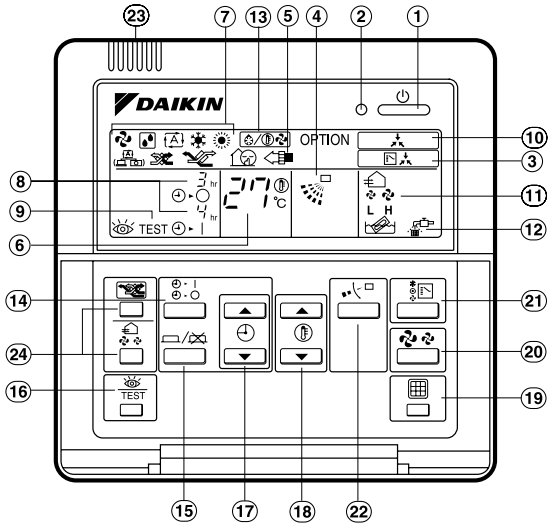

Wired Remote Controller	Type	Model
		R-410A
BRC1C62	Ceiling Mounted Cassette Type (Double-Flow)	FXCQ
	Ceiling Mounted Cassette Type (Multi-Flow)	FXFQ
	Ceiling Mounted Cassette Corner Type	FXKQ
	Ceiling Suspended Type	FXHQ
	Wall Mounted Type	FXAQ
	New Ceiling Suspended Cassette Type	FXUQ
	Slim Ceiling Mounted Duct Type	FXDQ
	Ceiling Mounted Duct Type (Low Silhouette Type)	—
	Ceiling Mounted Built-In Type	FXSQ
	Ceiling Mounted Built-In Type (Rear Suction)	—
	Ceiling Mounted Duct Type	FXMQ
	Floor Standing Type	FXLQ
	Concealed Floor Standing Type	FXNQ

Notes
1 : BRC1C62...Kits for General Market

14

1. **On/off button**
   Press the button and the system will start. Press the button again and the system will stop.
2. **Operation lamp (red)**
   The lamp lights up during operation.
3. **Display “ ” (changeover under control)**
   It is impossible to changeover heat/cool with the remote controller which display this icon.
4. **Display “ ” (air flow flap)**
5. **Display “ OPTION ” (ventilation/air cleaning)**
   This display shows that the ventilation unit are in operation. (these are optional accessories)
6. **Display “ ” (set temperature)**
   This display shows the temperature you have set.
7. **Display “ ” “ ” “ ” “ ” “ ” (operation mode)**
   This display shows the current operation mode.
8. **Display “ ” (programmed time)**
   This display shows the programmed time of the system start or stop.
9. **Display “ TEST ” (inspection/test operation)**
   When the inspection/test operation button is pressed, the display shows the mode in which the system actually is.
10. **Display “ ” (under centralized control)**
    When this display shows, the system is under centralized control. (This is not a standard specification.)
11. **Display “ ” (fan speed)**
    This display shows the fan speed you have selected.
12. **Display “ ” (time to clean air filter)**
13. **Display “ ” (defrost/hot start)**
14. **Timer mode start/stop button**
15. **Timer on/off button**
16. **Inspection/test operation button**
    This button is only used by qualified service persons for maintenance purposes.
17. **Programming time button**
    Use this button for setting the programming start and/or stop time.
18. **Temperature setting button**
    Use this button for setting the desired temperature.
19. **Filter sign reset button**
    Refer to the operation manual of indoor unit.
20. **Fan speed control button**
    Press this button to select the fan speed of your preference.
21. **Operation mode selector button**
    Press this button to select the operation mode of your preference.
22. **Air flow direction adjust button**
23. **Thermistor**
    It sense the room temperature around the remote controller.
24. **These button are used when the ventilation unit are installed (These are optional accessories)**
    Refer to the operation manual of the ventilation unit.

- In contradistinction to actual operating situations, the display on figure 1 shows all possible indications.
- Above figure shows the remote controller which is opened the cover.
- If that particular function is not available, pressing the button may display the words “NOT AVAILABLE” for a few seconds.
  When running multiple units simultaneously the “NOT AVAILABLE” message will only be appear if none of the indoor units is equipped with the function. If even one unit is equipped with the function, the display will not appear.

C : 3P171361-1

6.1.2 Field Setting

FIELD SETTING (If optional accessories are mounted on the indoor unit, the indoor unit setting may have to be changed. Refer to the instruction manual for each optional accessory.)

Procedure

①When in the normal mode, press the "TEST" button for a minimum of four seconds, and the FIELD SET MODE is entered.

②Select the desired MODE NO. with the "▲▼" button.

③During group control, when setting by each indoor unit (mode No. 20, 21 and 23 have been selected), push the "UNIT NO." button and select the INDOOR UNIT NO to be set. (This operation is unnecessary when setting by group.)

④Push the "▲" upper button and select FIRST CODE NO.

⑤Push the "▼" lower button and select the SECOND CODE NO.

⑥Push the "SET" button once and the present settings are SET.

⑦Push the "TEST" button for about one second to return to the NORMAL MODE.

(Example) If during group setting and the time to clean air filter is set to FILTER CONTAMINATION - HEAVY, SET MODE NO. to "10," FIRST CODE NO. to "0," and SECOND CODE NO. to "02."

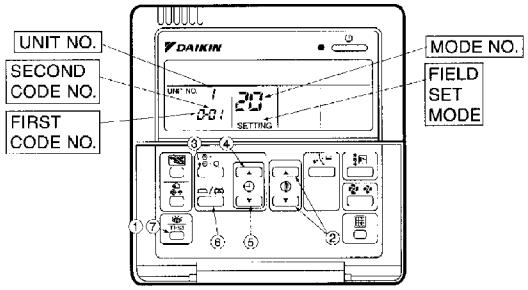

Mode No. Note) 1	FIRST CODE NO.	Description of Setting		SECOND CODE No. Note) 2 01		02		03
10(20)	0	Filter Contamination - Heavy/Light (Setting for spacing time of display time to clean air filter) (Setting for when filter contamination is heavy, and spacing time to clean air filter is to be halved)	Ultra-long-life type	Light	Approx. 10,000 hours	Heavy	Approx. 5,000 hours	—
			Long-life type		Approx. 2,500 hours		Approx. 1,250 hours	
			Standard type		Approx. 200 hours		Approx. 100hours	
	1	Long-life filter type (Setting of filter sign indication time) (Change setting when Ultra-long-life filter is installed)		Long-life filter		Ultra-long-life filter (1)		—
	3	Spacing Time of Display Time to Clean Air Filter Count (Setting for when the filter sign is not to be displayed)		Display		Do Not Display		—
11(21)	0	Setting Number of Connected Skyair Simultaneous Operation System Indoor Units (Setting for Simultaneous Operation System)		Pair		Twin		—
13(23)	0	High Ceiling Setting (Setting for when installed in a Ceiling higher than 2.7m)		Normal		High Ceiling 1		High Ceiling 2
	1	Selection of Air Flow Direction (Setting for when a blocking pad kit has been installed)		F		T		W
	3	Air Flow Direction Adjust Function (To be set when decoration panel for air outlet is installed)		Equippeed		No Equippeed		—
	4	Air Flow Direction Range Setting		Upper		Normal		Lower
	6	Setting the External Static Pressure (Setting according to the connected duct resistance) (For FHYK, follow the High Ceiling Setting)		Normal (Normal)		High Static Pressure (High Ceiling)		Low Static Pressure —

NOTES)
1. Setting is carried out in the group mode, however, set the mode number inside the ( ) for individual setting of the each indoor unit or confirmation after setting.
2. The SECOND CODE number. is set to "01" when shipped from the factory. However for the following cases it is set to "02"
   • Air flow direction range setting.
3. Do not make any settings not given in the table on the left.
4. Not displayed if the indoor unit is not equipped with that function.
5. When returning to the normal mode, "88" may be displayed in the LCD in order for the remote controller to initialize itself.

2P068938

14

Notes:

1. Setting is carried out in the group mode. however, if the mode number inside the parentheses is selected, indoor units can also be set individually.
2. The SECOND CODE number is set to " ▭ " when shipped from the factory.
3. Not displayed if the indoor unit is not equipped with that function.
4. When returning to the normal mode. "*88*" may be displayed in the LCD in order for the remote controller to initialize itself.
5. ∗ : Setting the static pressure selection for FXD (Q)

	SECOND CODE NO.	
	01 (Factory Setting)	02 (High Static Pressure Setting)
FXD	20 Pa	49 Pa
FXDQ	15 Pa	44 Pa

6.1.3 Setting Group No. for Centralized Control

In order to conduct the central remote control using the central remote controller and the unified ON/OFF controller, Group No. settings should be made by group using the operating remote controller.
Make Group No. settings for central remote control using the operating remote controller.

1. While in normal mode, press and hold the TEST switch for a period of four seconds or more to set the system to "Field Setting Mode"."
2. Select the MODE No. "*00*" with the " ▣ " button.
3. Use the " ▣ " button to select the group No. for each group.
   (Group numbers increase in the order of 1-00, 1-01, ... 1-15, 2-00, ... 4-15.)
4. Press " ▣ " to set the selected group No.
5. Press " TEST " to return to the NORMAL MODE.

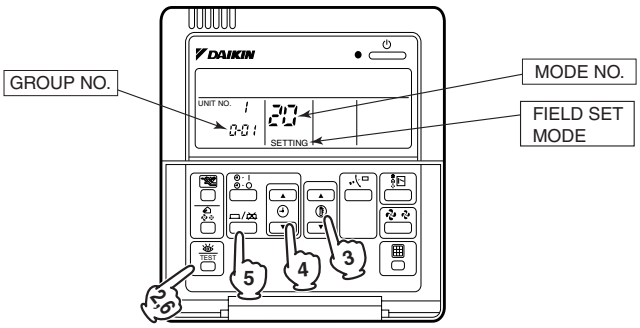

Note:

■ For simplified remote controller, see the following.

NOTICE

Enter the group No. and installation place of the indoor unit into the attached installation table. Be sure to keep the installation table with the operation manual for maintenance.

6.1.4 Trouble Shooting

1. If one of the following malfunctions occurs, take the measures shown below and contact your Daikin dealer. The system must be repaired by a qualified service person.

- If a safety device such as a fuse, a breaker, or an earth leakage breaker frequently actuates, or ON/OFF switch does not properly work.
  Measure: Stop the system.
- If water leaks from unit.
  Measure: Stop the system.
- If the display " " (INSPECTION), "UNIT No.", and the OPERATION lamp flash and the "MALFUNCTION CODE (ERROR CODE)" appears.

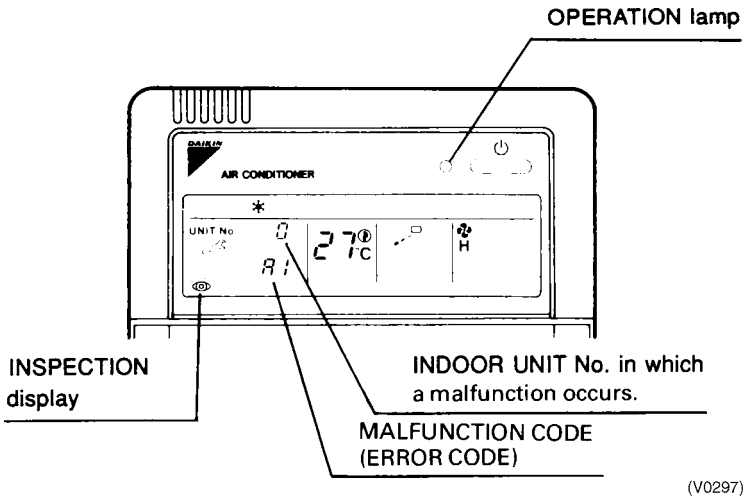

Measure: Notify your Daikin dealer and inform him/her of the display.

2. If the system does not properly operate except for the above mentioned case, and none of the above mentioned malfunctions is evident, investigate the system according to the following procedures.

1. If the system does not operate at all.
- Check if there is a power failure.
  If power failure occurs during operation, the system automatically restarts immediately after the power supply recovers.

2. The system goes into FAN OPERATION, but as soon as it goes into HEATING or COOLING OPERATION, the system stops
- Check if the air inlet or outlet of outdoor or indoor unit is blocked by obstacles.
- Check if the remote controller display shows " " (TIME TO CLEAN AIR FILTER). Ask a qualified service person to clean the air filters.

3. The system operates but it does not sufficiently cool or heat.
Check the below matters.
- If the thermostat setting is too high or too low.
- If the air inlet or outlet of the indoor or the outdoor unit is blocked with obstacles.
- If the doors or the windows are open.
- If the FAN SPEED button is set to LOW SPEED " ".
- If there are too many occupants in the room during cooling operation.
- If the heat source of the room is excessive.
- If direct sunlight enters the room.

6.1.5 Display of Malfunction (Error) Codes

1. Diagnosis by liquid crystal display of remote contrroller

When the operation is stopped due to trouble, " 👁 " and error code are displayed. In such a case, diagnosis the fault contents by using the table below, the unit No. is displayed at group controlling, which makes it possible to know the indoor unit No. which is in trouble.

2. Diagnosis by monitor of micro computer [LED-A (GREEN)]

LED: Flickering — Normal LED: ON or OFF — Error

3. Diagnosis by monitor of connection between indoor and outdoor/BS unit (LED 10 (Red) on indoor printed circuit board)

LED: OFF — Normal LED: ON — Error (connecting wiring failure)

LIST OF MALFUNCTION (ERROR) CODES

Div.	Error codes	Error contents
Indoor unit error	A0	Operation of protective unit
	A1	Printed circuit board error
	A1	Printed circuit board error
	A3	Drain level (33H) error
	A6	Fan motor locking, overload
	A7	Swing flap motor (M1S) error
	A9	Electronic expansion valve drive unit (Y1E) error
	AF	Drain level (33H) error (Indoor unit is stopping)
	AJ	Capacity setting error
	C4	Liquid pipe thermistor (R2T) error
	C5	Gas pipe thermistor (R3T) error
	C9	Suction air thermistor (R1T) error
	CJ	Remote controller thermistor error
Outdoor unit error	E0	Operation of protective unit
	E1	Printed circuit board error
	E1	Printed circuit board error
	E3	Operation of high pressureswitch
	E4	Operation of low pressureswitch
	E9	Electronic expansion valve drive unit (Y1E) error
	F3	Discharge pipe temperature error
	H3	High pressure switch error
	H4	Operation of low pressureswitch
	H9	Outdoor air thermistor (R1T) error
	H9	Outdoor air thermistor (R1T) error
	J1	Pressure sensor error
	J3	Discharge pipe thermistor (R3T) error
	J3	Discharge pipe thermistor (R3T) error
	J5	Suction pipe thermistor (R4T) error
	J6	Heat exchanger' s thermistor (R2T) error
	J6	Heat exchanger' s thermistor (R2T) error
	JA	Discharge pipe pressure sensor error
	JC	Suction pipe pressure sensor error
	JH	Oil thermistor error

Div.	Error codes	Error contents
Outdoor unit error	L0	Inverter error
	L4	Inverter cooling error
	L5	Short-circuit in compressor motor, short-circuit in power unit
	L6	Short-circuit in compressor motor, short-circuit
	L8	Over load in compressor, disconnection compressor motor
	L9	Locking in compressor
	LA	Power unit error
	LC	Transmission error between inverter and outdooor unit
	P1	Voltage unbalance, open phase
	P4	Power unit temperature sensor error
System error	**U0**	Pressure drop due to insufficient refrigerant electoronic expansion valve
	U1	Peverse phase, open phase
	U2	Voltage error, instantaneous power interruption
	U4	Transmission error between indoor unit and outdoor/BS unit Transmission error between outdoor unit and BS unit
	U5	Transmission error between remote controller and indoor unit
	U5	Printed circuit board error or setting error of remote controller
	U7	Transmission error between outdoor units
	U7	Transmission error between outdoor units(unified cooling/heating, low noise operation)
	U8	Transmission error between main remote controller and sub remote controller
	U9	Transmission error between another indoor unit and outdoor unit within same system
	UA	Conbination error of indoor unit/BS unit/outdoor unit (model No, etc) Conbination error of indoor unit/remote controller Connected location error of BS unit
	UC	Address duplication of central remote controller
	UE	Transmission error between indoor unit and central remote controller
	UF	Wiring circuit does not corespond to refrigerant circuit
	UH	Miss wiring

As for error codes blanked with white, be sure to check and repair, though system may be operated without displaying " 👁 "

(V0298)

6.1.6 Remote Controller Mounting Instructions

1. Remove the Upper Part of Remote Controller

Insert minus screwdriver into the slots in the lower part of remote controller (2 places), and remove the upper part of remote controller.

The PC board is mounted in the upper part of remote controller. Be careful not to damage the board with the minus screwdriver.

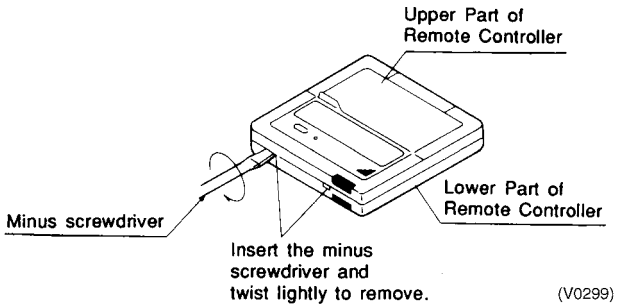

2. Fasten the Remote Controller

1. **For exposed mounting,** fasten with the included wood screws (2).

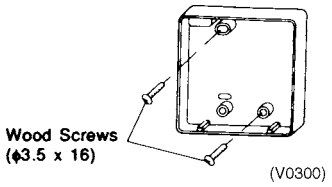

2. **For flush-mounting,** fasten with the included machine screws (2).

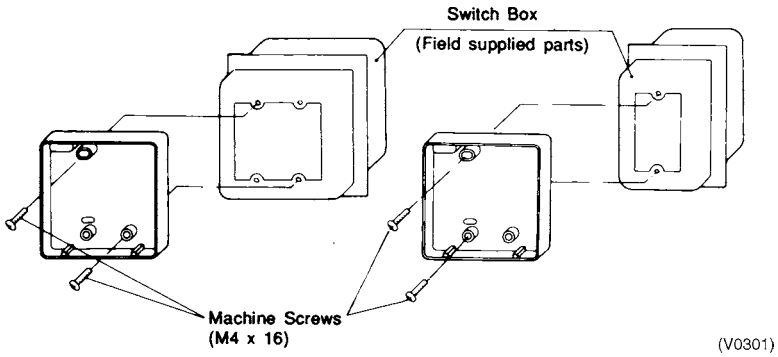

For the field supplied switch box, use optional accessories KJB111A or KJB211A.

Note:
Choose the flattest place possible for the mounting surface. Be careful not to distort the shape of the lower part of remote controller by over-tightening the mounting screws.

2PA52602C

14

3. Wire the Indoor Unit

Connect the terminals on top of the upper part of remote controller (P1, P2), and the terminals of the indoor unit (P1, P2). (P1 and P2 do not have polarity.)

Note:

When wiring, run the wiring away the power supply wiring in order to avoid receiving electric noise (external noise).

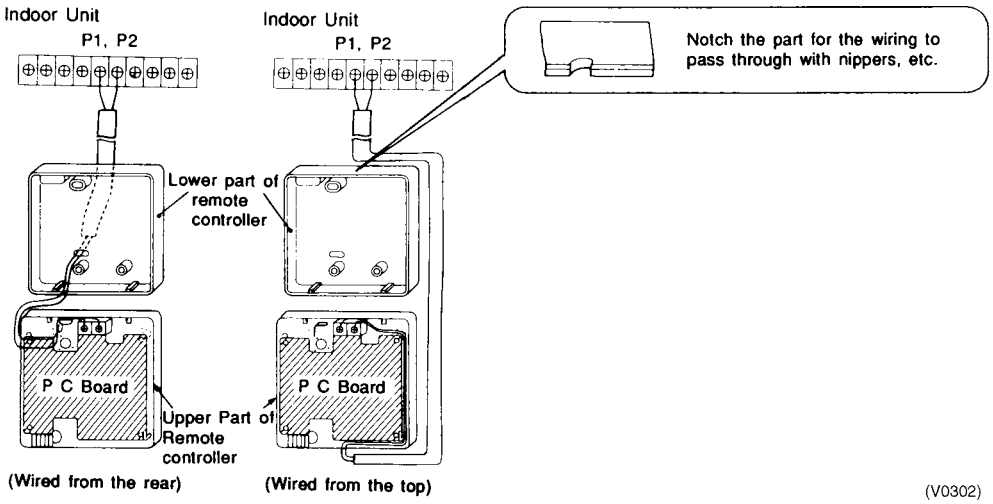

Wiring Specifications

Wiring Type	Sheathed Wire (2 wire)
Size	0.75 - 1.25 mm²

Note:

1. Peel the shield and sheath for the part that is to pass through the inside of the remote controller case, as shown in the figure below.

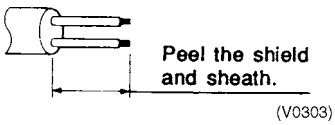

2. Treat the terminal for the wire to be connected to the remote controller so the shielded part doesn't touch any other part.

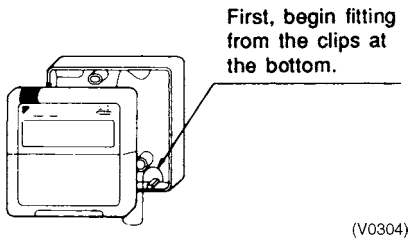

4. Reattach the Upper Part of Remote Controller

Be careful not to pinch the wiring when attaching.

Note:

1. The switch box and wiring for connection are not included.
2. Do not directly touch the PC board with your hand.

C : 2PA52602C

6.2 <BRC4C, 7C, 7E> Wireless Remote Controller

6.2.1 Applied Model

	Model Name	Applied Model		Model Name	Applied Model
Signal receiver of indoor units	BRC7E61W, 65	Ceiling Mounted Cassette (Multi-Flow) Type	Signal receiver for Local	BRC4C62	The same series as for BRC1A62. (Heat pump)
	BRC7C62, 67	Ceiling Mounted Cassette (Double-Flow) Type		BRC4C64	The same series as for BRC1A62. (Cooling only)
	BRC7E63W, 66	Ceiling Suspended Type		BRC4C61	The same series as for BRC1A61. (Heat pump)
	BRC7E618, 619	Wall Mounted Type		BRC4C63	The same series as for BRC1A61. (Cooling only)
	BRC7C528W	Ceiling Suspended Cassette Type (Connection Unit Series)			

6.2.2 Part Names and Functions

Remote Controller Combination Kit Name (Main Unit + Signal Receiver)	Remote Controller Kit Name (Main Unit)
BRC7E61W BRC7C62 BRC7E618 BRC7E63W BRC4C61 BRC7C528W	BRC4C151
BRC7E65 BRC7C67 BRC7E619 BRC7E66 BRC4C63	BRC4C153
BRC4C62	BRC4C152
BRC4C64	BRC4C154

1

1-1

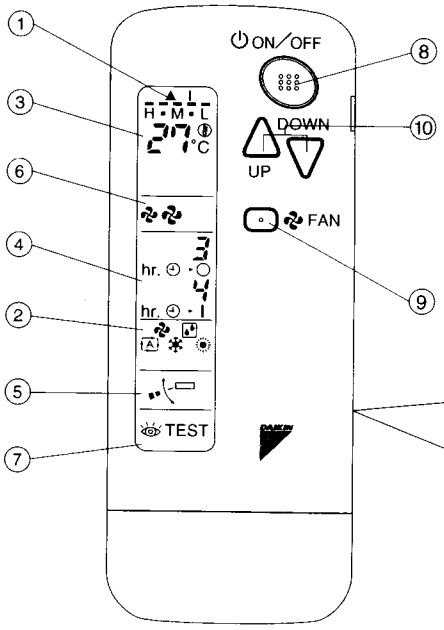

1-2

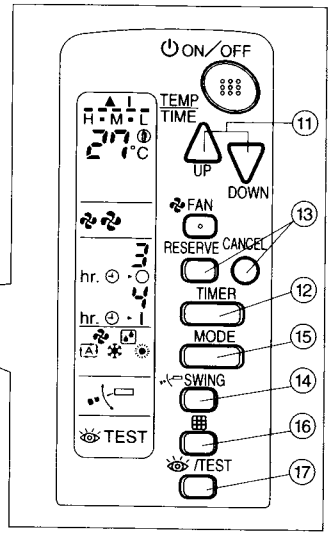

(V0306)

1-3

COOL/HEAT CHANGEOVER REMOTE CONTROL SWITCH

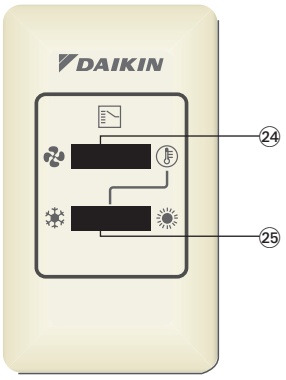

(V2444)

2

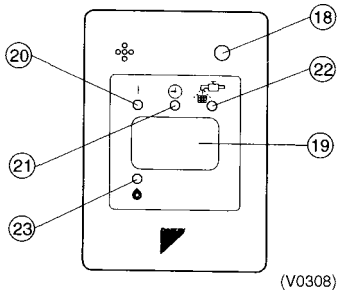

(V0308)

C : 3PA63363-13G

14

NAMES AND FUNCTIONS OF THE OPERATING SECTION

①	**DISPLAY " ▲ " (SIGNAL TRANSMISSION)** This lights up when a signal is being transmitted.
②	**DISPLAY " " " " " " " " " " (OPERATION MODE)** This display shows the current OPERATION MODE. For straight cooling type, " " (Auto) and " " (Heating) are not installed.
③	**DISPLAY " " (SET TEMPERATURE)** This display shows the set temperature.
④	**DISPLAY " " (PROGRAMMED TIME)** This display shows PROGRAMMED TIME of the system start or stop.
⑤	**DISPLAY " " (AIR FLOW FLAP)**
⑥	**DISPLAY " " " " (FAN SPEED)** The display shows the set fan speed.
⑦	**DISPLAY " /TEST" (INSPECTION/ TEST OPERATION)** When the INSPECTION/TEST OPERATION BUTTON is pressed, the display shows the system mode is in.
⑧	**ON/OFF BUTTON** Press the button and the system will start. Press the button again and the system will stop.
⑨	**FAN SPEED CONTROL BUTTON** Press this button to select the fan speed, HIGH or LOW, of your choice.
⑩	**TEMPERATURE SETTING BUTTON** Use this button for SETTING TEMPERATURE (Operates with the front cover of the remote controller closed.)
⑪	**PROGRAMMING TIMER BUTTON** Use this button for programming "START and/or STOP" time. (Operates with the front cover of the remote controller opened.)
⑫	**TIMER MODE START/STOP BUTTON**
⑬	**TIMER RESERVE/CANCEL BUTTON**
⑭	**AIR FLOW DIRECTION ADJUST BUTTON**
⑮	**OPERATION MODE SELECTOR BUTTON** Press this button to select OPERATION MODE.
⑯	**FILTER SIGN RESET BUTTON** Refer to the section of MAINTENANCE in the operation manual attached to the indoor unit.
⑰	**INSPECTION/TEST OPERATION BUTTON** This button is used only by qualified service persons for maintenance purposes.
⑱	**EMERGENCY OPERATION SWITCH** This switch is readily used if the remote controller does not work.
⑲	**RECEIVER** This receives the signals from the remote controller.
⑳	**OPERATING INDICATOR LAMP (Red)** This lamp stays lit while the air conditioner runs. It flashes when the unit is in trouble.
㉑	**TIMER INDICATOR LAMP (Green)** This lamp stays lit while the timer is set.
㉒	**AIR FILTER CLEANING TIME INDICATOR LAMP (Red)** Lights up when it is time to clean the air filter.
㉓	**DEFROST LAMP (Orange)** Lights up when the defrosting operation has started.
㉔	**FAN/AIR CONDITIONING SELECTOR SWITCH** Set the switch to " " (FAN) for FAN and " " (A/C) for HEAT or COOL.
㉕	**COOL/HEAT CHANGEOVER SWITCH** Set the switch to " " (COOL) for COOL and " " (HEAT) for HEAT.

(NOTE)
- For the sake of explanation, all indications are shown on the display in Figure 1 contrary to actual running situations.
- Fig. 1-2 shows the remote controller with the front cover opened.
- Fig. 1-3 shows this remote controller can be used in conjunction with the one provided with the VRV system.
- If the air filter cleaning time indicator lamp lights up, clean the air filter as explained in the operation manual provided with the indoor unit. After cleaning and reinstalling the air filter, press the filter sign reset button on the remote controller. The air filter cleaning time indicator lamp on the receiver will go out.

(V0309)

C : 3PA63363-13G

6.2.3 Example of the System by Wireless Remote Controller

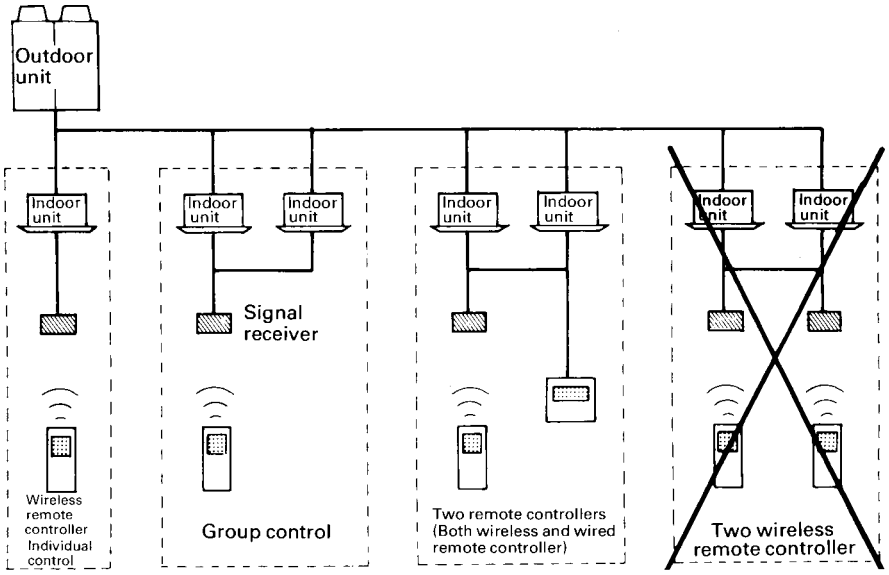

When you use two remote controllers, be sure to set the wired remote controller of indoor unit as Main.
It is not possible to use two wireless remote controller.
The wiring between the separate type signal receiver and the indoor unit should not exceed 200 m.

6.2.4 Functional Comparison between Wired and the Wireless Remote Controller

Function/Display	Wired Remote Controller	Wireless Remote Controller
Operation Lamp	LED on The Remote Controller	LED on The Signal Receiver
ON/OFF BUTTON	"On" and "Off" is repeated each time you press the button.	
OPERATION MODE SELECTOR BUTTON	Operation mode can be changed by this button. However, if the unit is under the control of central remote controller, the operation mode cannot be changed.	Operation mode can be changed by this button. However, if the unit is under the control of the central controller, the operation mode cannot be changed, though the display on the remote control is changed.
AIR FLOW DIRECTION ADJUST BUTTON	The position of the flaps can be set by this button by looking at the display on the LCD.	The position of the flaps can be set by this button by looking at the position of the flaps of the unit.
Filter Sign Reset Button	Filter sign can be reset by this button after cleaning the air filter.	Filter sign can be reset by this button after cleaning the air filter. It is displayed on the LCD of the signal receiver.

■ The operation and the setting by other operational button (Temperature setting, fan speed control, timer, inspection/test operation, and group No. setting) are the same for both wireless and wired remote controller.

Function/Display	Wired Remote Controller	Wireless Remote Controller
Display of "TIME TO CLEAN AIR FILTER"	Displayed on the LCD of remote controller	Displayed on the LED of the signal receiver
Display of "VENTILATION"	This display is shown when HRV is in operation.	—
Display of "DEFROST/ HOT START"	This display is shown when the unit is in defrost/hot start operation	Displayed on the LED of the receiver.
Display of "UNDER CENTRALIZED CONTROL"	This display is shown when the system is under centralized control.	There is no display, but it notifies by the buzzer.
Display of "CHANGEOVER UNDER CENTRALIZED CONTROL"	This display is shown when the remote controller cannot changeover heat/cool.	No display (It alerts by the buzzer that the operation mode cannot be changed.)
Thermostat on the Remote Controller	Yes	No
Ventilation Mode	Yes	No

6.3 <BRC2C51 (BRC2A51)> Simplified Remote Controller

6.3.1 Name and Function

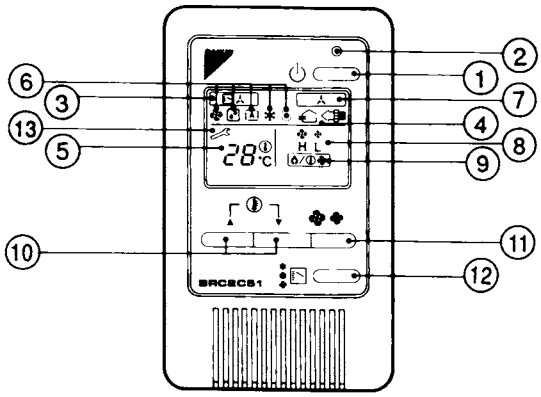

REMOTE CONTROLLER: NAME AND FUNCTION OF EACH SWITCH AND DISPLAY	
①	**ON/OFF BUTTON** Press the button and the system will start. Press the button again and the system will stop.
②	**OPERATION LAMP (RED)** The lamp lights up during operation. Blinks in case of stop due to malfunction.
③	**DISPLAY " [ ] " (CHANGEOVER UNDER CONTROL)** It is impossible to changeover heat/cool with the remote controller when it shows this display. (As for details, see " SETTING OF MASTER REMOTE CONTROLLER" in the operation manual attached to the indoor unit.)
④	**DISPLAY " OPTION " (VENTILATION)** This display shows that the total heat exchanger (HRV) are in operation.
⑤	**DISPLAY "28 °C "(SET TEMPERATURE)** This display shows the set temperature. Only given during a cooling or heating operation.
⑥	**DISPLAY " " " " " " " " " " (OPERATION MODE)** This display shows current OPERATION MODE. " " is not available with outdoor units specially designed for cooling only. " " is reserved only for outdoor units capable of heat recovery.
⑦	**DISPLAY " " (UNDER CENTRALIZED CONTROL)** When this display shows, the system is UNDER CENTRALIZED CONTROL. (This is not a standard specification)
⑧	**DISPLAY " H " " L " (FAN SPEED).** The display shows the fan speed: "HIGH" or "LOW".
⑨	**DISPLAY " " (DEFROST/ HOT START)** Indicates that defrost or hot start (during which the fan is stopped till the temperature of air supply rises enough at the start of a heating run) is progress.
⑩	**TEMPERATURE SETTING BUTTON** Use this button for SETTING TEMPERATURE of the thermostat. ▲ ; Each press raises the set temperature by 1°C. ▼ ; Each press lowers the set temperature by 1°C. The variable temperature range is 16°C to 32°C.
⑪	**FAN SPEED CONTROL BUTTON** Press this button to select the fan speed, HIGH or LOW, of your choice.
⑫	**OPERATION MODE SELECTOR BUTTON** Press this button to select OPERATION MODE.
⑬	**DISPLAY " " (MALFUNCTION)** Indicates malfunction and blinks if the unit stops operating due to malfunction. (As for details, see "TROUBLE SHOOTING" in the operation manual attached to the indoor unit.)
For the sake of explanation, all indications are shown in the figure above contrary to actual running situations.	

C : 2PA52942

Note:

1. Following functions are not including in this controller.
   - Auto swing function.
   - Timer setting function.
   - Display of time to clean air filter.
2. For setting, refer to next page.
3. For BRC2C51
   - Equipped with a thermostat sensor in the remote controller that makes possible more comfortable room temperature control.
   - Complied with the RoHS directive.

6.3.2 Setting Procedure

1. Remove the upper part of remote controller.
2. When in the normal mode, press the [BS6] BUTTON (②) (field set), and the FIELD SET MODE is entered.
3. Select the desired MODE No. with the [BS2] BUTTON (③) (temperature setting ▲) and the [BS3] BUTTON (③) (temperature setting ▼).
4. During group control, when setting by each indoor unit (mode No. 20, 22, and 23 have been selected), push the [BS8] (④) BUTTON (unit No.) and select the INDOOR UNIT NO. to be set. (This operation is unnecessary when setting by group.)
5. Push the [BS9] BUTTON (⑤) (set A) and select FIRST CODE NO.
6. Push the [BS10] BUTTON (⑥) (set B) and select SECOND CODE NO.
7. Push the [BS7] BUTTON (⑦) (set/cancel) once and the present settings are SET.
8. Push the [BS6] BUTTON (⑧) (field set) to return to the NORMAL MODE.

(Example) If during group setting and the time to clean air filter is set to FILTER CONTAMINATION - HEAVY, SET MODE NO. to “10”, FIRST CODE NO. to “0”, and SECOND CODE NO. to “02”.

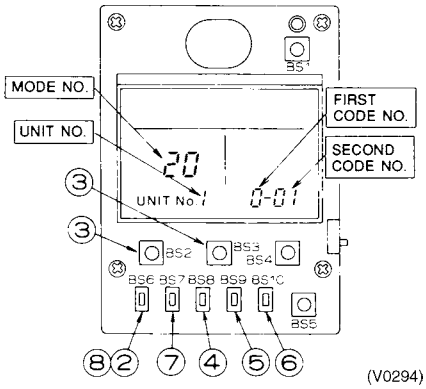

3PA52946A

- If not using any remote controllers, connect a remote controller for group No. setting, set the group No. for centralized control, and then disconnect the remote controller after setting.
- Group No. setting example

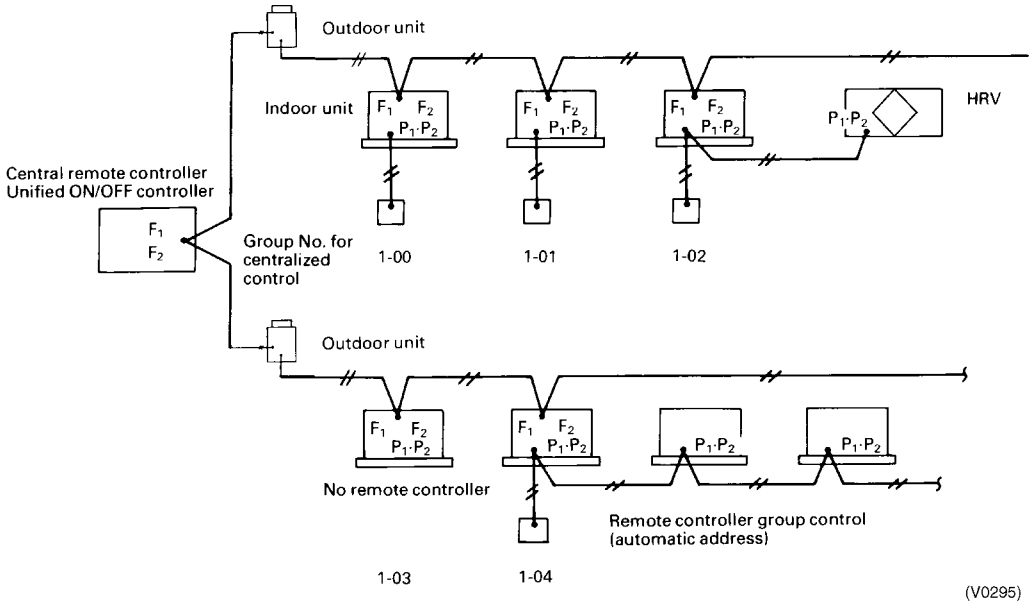

<If controlling one indoor unit with two remote controllers>

Change the MAIN/SUB changeover switch setting as described below.

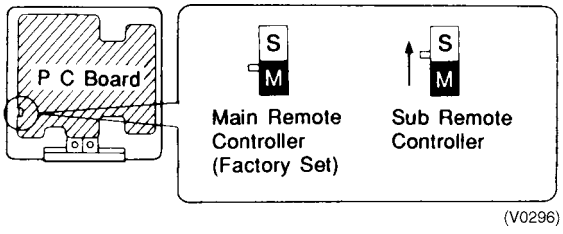

Set one remote controller to “main”, and the other to “sub”.

Note:

- If controlling with one remote controller, be sure to set it to “main”.
- Set the remote controller before turning power supply on.

14

6.4 <BRC3A61> Remote Controller for Hotel Use

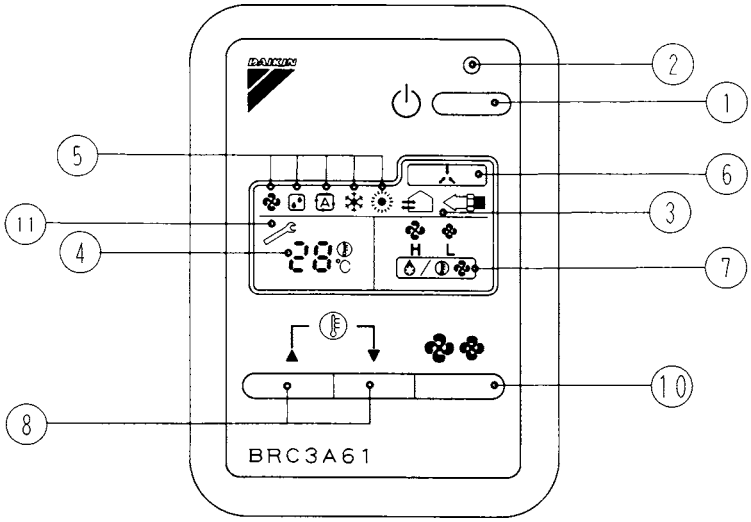

REMOTE CONTROLLER: NAME AND FUNCTION OF EACH SWITCH AND DISPLAY

①	ON/OFF BUTTON Press the button and the system will start. Press the button again and the system will stop.	⑦	DISPLAY' H L '(FAN SPEED) The display shows the fan speed: 'HIGH' or 'LOW'.
②	OPERATION LAMP(RED) The lamp lights up during operation. Blinks in case of stop due to malfunction.	⑧	DISPLAY'(DEFROST/HOT START)' Indicates that defrost or hot start (during which the fan is stopped till the temperature of air supply rises enough at the start of a heating run)is progress.
③	DISPLAY'OPTION' (VENTILATION/AIR CLEANING) This display shows that the total heat exchange are in operation. (This is optional accessory)	⑨	TEMPERATURE SETTING BUTTON Use this button for SETTING TEMPERATURE of the thermostat. ▲:Each press raises the set temperature by 1℃ ▼:Each press lowers the set temperature by 1℃ The variable temperature range is 16℃ to 32℃.
④	DISPLAY' 28 ' (SET TEMPERATURE) This display shows the set temperature. Only given during a cooling or heating operation.	⑩	FAN SPEED CONTROL BUTTON Press this button to select the fan speed, HIGHT or LOW, of your choice.
⑤	DISPLAY' '' '' '' '' ' (OPERATION MODE) This display shows current OPERATION MODE. ' ' is not available whis outdoor units specially designed for cooling only. ' ' is reserved only for outdoor units capable of heat recovery.	⑪	DISPLAY' ' (MALFUNCTION) Indicates malfunction and blinks if the unit stops operating due to malfunction. (As for details, see 'TROUBLE SHOOTING' in the operation manual attached to the indoor unit or the outdoor unit.)
⑥	DISPLAY'' (UNDER CENTRALIZED CONTROL) When this display shows, the system is UNDER CENTRALIZED CONTROL (This is not a standard specification)		

(NOTE)
- For the sake of explanation, all indications are shown in the figure above contrary to actual running situations.
- This remote controller does not have "AIR FLOW DIRECTION ADJUST BUTTON." Don't operate the flap adjusting air flow direction by your hand. (FXF, FXC, FXH, FXA, FXK)

C : 3PA61137

6.5 <KRC19-26A> Cool / Heat Selector for Outdoor Units

This remote controller has a switch to enable selection of a heating or cooling operation for each outdoor unit or system. The controller can also be used to switch to the fan operation mode, for example, during moderate weather season.

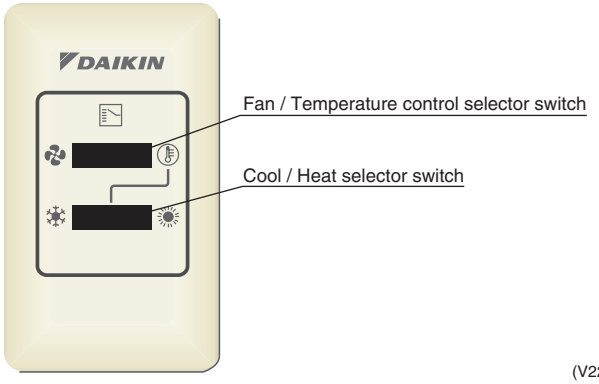

(V2227)

- Basically, this remote controller is not necessary for the Cooling/Heating VRV System and the Cooling Only VRV System.
- When the BS unit that automatically selects either cooling or heating operation mode is used in the manual mode, this remote controller can be connected to the BS unit.

Installation Point

1. Remove the decorative plate.
   - Insert a (-) screwdriver in the gap between the concaved part of the decorative plate and the remote control switch to open it.

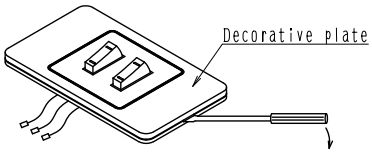

2. Provide the wiring between the remote control switch and the outdoor unit.
   - Connect terminals (A, B, C) on the back side of the remote control switch to terminals (A, B, C) on the outdoor unit.
   - ---shows field wiring.
   - Use the wires shown below ror the wiring.

Kind of wires	Polyvinyl chloride insulated and sheathed cords or cables.
Size of wires	0.75～1.25mm²

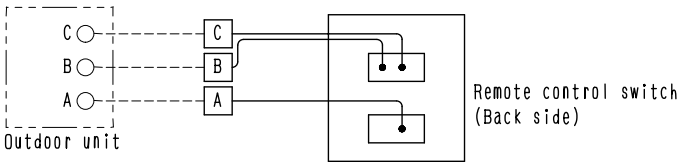

3. Attach the remote control switch to the switch box (To be obtained locally) as shown below.

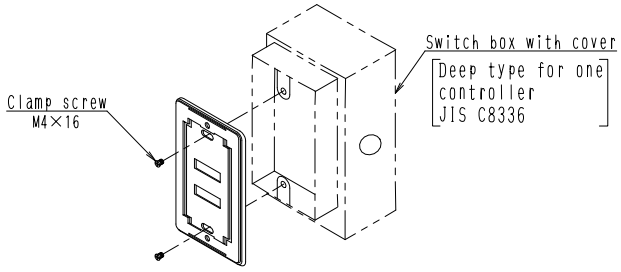

4. Attach the decorative plate.

Note; The switch box and connecting wires are not attached.

3P077945A

14

Part 6
Guide Specifications

1. Guide Specifications 552
1.1 Guide Specifications.....552
2. Caution for Refrigerant Leaks 554
3. Safety Devices Setting 556

1. Guide Specifications

1.1 Guide Specifications

General

Unit shall be air cooled, split type multi-system air conditioner consisting of one outdoor unit and plural indoor units, each having capability to cool or heat independently for the requirements of the rooms.
Up to 11 different type and 0.8-5HP capacity indoor units can be connected to one refrigerant circuit and controlled individually.
Compressor shall be equipped with inverter controller, and capable of changing the rotating speed to follow variations in cooling and heating load.
Outdoor unit shall be suitable for mix-match connection of following models.

- Ceiling Mounted Cassette Type (Double Flow)
- Ceiling Mounted Cassette Type (Multi Flow)
- Ceiling Mounted Cassette Corner Type
- Slim Ceiling Mounted Duct Type
- Ceiling Mounted Built-In Type
- Ceiling Mounted Duct Type
- Ceiling Suspended Type
- Wall Mounted Type
- Floor Standing Type
- Concealed Floor Standing Type
- Ceiling Suspended Cassette Type (Connection Unit Series)

- Refrigerant : R-410A

1.1.1 P Series Outdoor Unit

The refrigerant piping shall be extended up to 150m with 50m (★1) level difference without any oil traps.

- Air conditioner shall operate continuously at the ambient temperature of -5°C in cooling -15°C in heating (Operative Range: -20°C).
  Both indoor unit outdoor unit are assembled, tested, and charged with refrigerant at the factory.
  ★1: The value is based on the case where the outdoor unit is located above indoor unit. Where the outdoor unit is located under the indoor unit, the level difference is a maximum of 40m.

Outdoor Unit

The outdoor unit shall be a factory assembled unit housed in a sturdy weatherproof casing constructed form rust-proofed mild steel panels coated with a baked enamel finish.

- The connectable range of indoor units shall be from 0.8 to 5HP with all outdoor units.
- The noise level shall not be more than 50 dB(A) (in case of 4HP cooling) at normal operation measured horizontally 1m away and 1.5m above ground.
  The outdoor unit shall be modular in design and should be allowed for side by side installation.

Compressor

The compressor shall be of highly efficient hermetic scroll type and equipped with inverter control capable of changing the speed in accordance to the cooling or heating load requirement.

- The outdoor unit shall have the multi-step of capacity control to meet load fluctuation and indoor unit individual control.

Heat Exchanger

The heat exchanger shall be constructed with copper tubes mechanically bonded to aluminium fins to form a cross fin coil.

- The aluminium fins shall be covered by anti-corrosion resin film.

Refrigerant Circuit

The refrigerant circuit shall include liquid and gas shut off valves and a solenoid valves.
All necessary safety devices shall be provided to ensure the safety operation of the system.

Safety Devices
The following safety devices shall be part of the outdoor unit.
High Pressure Switch, Fan Driver Overload Protector, Inverter Overload Protector, Fusible Plugs, Fuse.

Oil Recovery System
Unit shall be equipped with an oil recovery system to ensure stable operation with long refrigerant piping.

1.1.2 Indoor Units

Each indoor unit shall be of the Ceiling Mounted Cassette Type (Double Flow), or Ceiling Mounted Cassette Type (Multi Flow), or Ceiling Mounted Cassette Corner Type, or Slim Ceiling Mounted Duct Type, or Ceiling Mounted Built-In Type, or Ceiling Mounted Duct Type, or Ceiling Suspended Type, or Wall Mounted Type, or Floor Standing Type, or Concealed Floor Standing Type, or Ceiling Suspended Cassette Type (Connection Unit Series). It shall have electronic control valve which control refrigerant flow rate in respond to load variations of the room. The fan shall be of the dual suction multi blade type and statically and dynamically balanced to ensure low noise and vibration free operation.

- The address of the indoor unit shall be set automatically in case of individual and group control.
- In case of centralized control, it shall be set by liquid crystal remote controller.

Control
Computerized PID control shall be used to maintain a correct room temperature.
Unit shall be equipped with a self-diagnosis for easy and quick maintenance and service.
The LCD (Liquid Crystal Display) remote controller shall memorize the latest malfunction code for easy maintenance.

- It shall be able to control up to 16 indoor units and change fan speed and angle of swing flap individually in the group.

Central Remote Controller (Option)
A multi-functional centralized controller (central remote controller) shall be supplied as optional accessory.

- It shall be able to control up to 64 zones of 64 groups (each group consists of Max. 16 units) or 128 No.s of indoor units with the following functions.
  a) Temperature setting for each zone, or group, or indoor unit.
  b) On / off as a zone or individual unit.
  c) Indication of operating condition.
  d) Select one of 10 operation modes for each zone.
- The controller shall have wide screen liquid crystal display and can be wired by a non-polar 2-wire transmission cable to a distance of 1 km away from the indoor unit.

Unified ON / OFF Controller (Option)
Unified ON / OFF controller shall be supplied as optional accessory.
It shall be able to control up to 16 groups (each group consists of Max. 16 indoor units) or 128 No.s of indoor units with the following functions.
a) On/off as a zone or individual unit.
b) Indication of operation condition of each group.
c) Select one of 4 operation modes.

It shall be wired by a non-polar 2-wire transmission cable to a distance of 1 km away from indoor unit.

Schedule Timer (Option)
A schedule timer shall be supplied as optional accessory.

- It shall be able to set operation schedule of up to 128 No.s of indoor units.
  The operation schedule shall include twice on/off a day and holiday.
- It shall be able to set 8 pattern of schedule combined with centralized controller.

Intelligent Touch Controller (Option)
Air-Conditioning management system that can be controlled by a compact all-in-one unit

Intelligent Manager (Option)
Air conditioner management system (featuring minimized engineering) that can be controlled by personal computers.

2. Caution for Refrigerant Leaks

(Points to note in connection with refrigerant leaks)

Introduction

The installer and system specialist shall secure safety against leakage according to local regulations or standards. The following standards may be applicable if local regulations are not available.

The VRV System, like other air conditioning systems, uses R-410A as refrigerant. R-410A itself is an entirely safe non-toxic, non-combustible refrigerant. Nevertheless care must be taken to ensure that air conditioning facilities are installed in a room which is sufficiently large. This assures that the maximum concentration level of refrigerant gas is not exceeded, in the unlikely event of major leak in the system and this in accordance to the local applicable regulations and standards.

Maximum concentration level

The maximum charge of refrigerant and the calculation of the maximum concentration of refrigerant is directly related to the humanly occupied space in to which it could leak.

The unit of measurement of the concentration is kg/m^3 (the weight in kg of the refrigerant gas in 1m^3 volume of the occupied space).

Compliance to the local applicable regulations and standards for the maximum allowable concentration level is required.

In Australia the maximum allowed concentration level of refrigerant to a humanly space is limited to 0.44 kg/m^3 for R-410A.

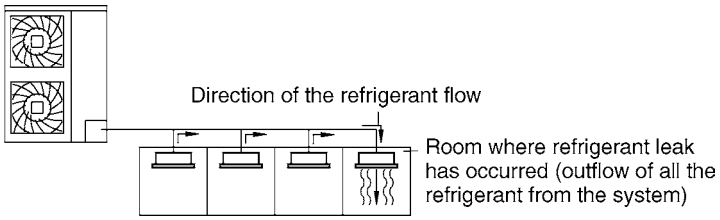

Pay a special attention to the place, such as a basement, etc. where refrigerant can stay, since refrigerant is heavier than air.

Procedure for checking maximum concentration

Check the maximum concentration level in accordance with steps 1 to 4 below and take whatever action is necessary to comply.

1. Calculate the amount of refrigerant (kg) charged to each system separately.

amount of refrigerant in a single unit system (amount of refrigerant with which the system is charged before leaving the factory)	+	additional charging amount (amount of refrigerant added locally in accordance with the length or diameter of the refrigerant piping)	=	total amount of refrigerant (kg) in the system

Note

- Where a single refrigerant facility is divided into 2 entirely independent refrigerant systems then use the amount of refrigerant with which each separate system is charged.

2. Calculate the smallest room volume (m^3)
   Incase like the following, calculate the volume of (A), (B) as a single room or as the smallest room.
   A.Where there are no smaller room divisions

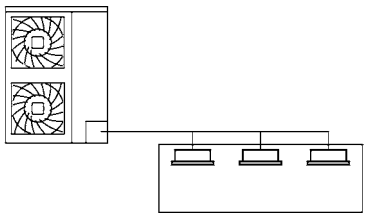

B.Where there is a room division but there is an opening between the rooms sufficiently large to permit a free flow of air back and forth.

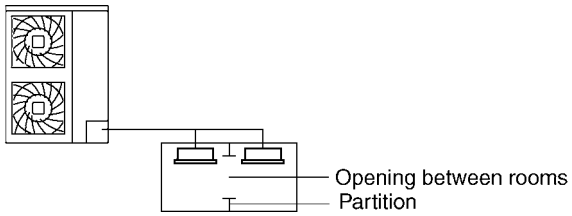

(Where there is an opening without a door or where there are openings above and below the door which are each equivalent in size to 0.15% or more of the floor area.)

3. Calculating the refrigerant density using the results of the calculations in steps 1 and 2 above.

$$\frac{\text{total volume of refrigerant in the refrigerant system}}{\text{size } (m^3) \text{ of smallest room in which there is an indoor unit installed}} \leq \text{maximum concentration level } (kg/m^3)$$

If the result of the above calculation exceeds the maximum concentration level then make similar calculations for the second then third smallest room and so until the result falls short of the maximum concentration.

4. Dealing with the situations where the result exceeds the maximum concentration level.
Where the installation of a facility results in a concentration in excess of the maximum concentration level then it will be necessary to revise the system.
Please consult your Daikin supplier.

3. Safety Devices Setting

	Safety devices		20	25	32	40	50	63	80(71)	100	125
FXCQ~MVE	PC board fuse		250V 5A	250V 5A	250V 5A	250V 5A	250V 5A	250V 5A	250V 5A	—	250V 5A
	Fan motor thermal fuse	°C	—	—	—	—	—	—	—	—	—
	Fan motor thermal protector	°C	OFF:135±5 (ON:86±15)	OFF:135±5 (ON:86±15)	OFF:135±5 (ON:86±15)	OFF:135±5 (ON:86±15)	OFF:135±5 (ON:86±15)	OFF:145±5 (ON:94±15)	OFF:145±5 (ON:94±15)	—	OFF:145±5 (ON:94±15)
	Drain pump thermal fuse	°C	169	169	169	169	169	169	169	—	169
FXFQ~MVE	PC board fuse		—	250V 5A	250V 5A	250V 5A	250V 5A	250V 5A	250V 5A	250V 5A	250V 5A
	Fan motor thermal fuse	°C	—	—	—	—	—	—	—	—	—
	Fan motor thermal protector	°C	—	—	—	—	—	—	—	—	—
FXKQ~MAVE	PC board fuse		—	250V 5A	250V 5A	250V 5A	—	250V 5A	—	—	—
	Fan motor thermal fuse	°C	—	146±3	146±3	—	—	—	—	—	—
	Fan motor thermal protector	°C	—	—	—	OFF:120±5 ON:105 or less	—	OFF:120±5 ON:105 or less	—	—	—
	Drain pump thermal fuse	°C	—	145	145	145	—	145	—	—	—
FXDQ~PVE(T) FXDQ~N(A)VE	PC board fuse		250V 5A	250V 5A	250V 5A	250V 5A	250V 5A	250V 5A	—	—	—
	Fan motor thermal protector	°C	OFF:130±5 (ON:83±15)	OFF:130±5 (ON:83±15)	OFF:130±5 (ON:83±15)	OFF:130±5 (ON:83±15)	OFF:130±5 (ON:83±15)	OFF:130±5 (ON:83±15)	—	—	—
FXSQ~MVE	PC board fuse		250V 10A	250V 10A	250V 10A	250V 10A	250V 10A	250V 10A	250V 10A	250V 10A	250V 10A
	Fan motor thermal fuse	°C	—	—	—	—	—	—	—	—	—
	Fan motor thermal protector	°C	OFF:135±5 (ON:86±15)	OFF:135±5 (ON:86±15)	OFF:135±5 (ON:86±15)	OFF:135±5 (ON:86±15)	OFF:135±5 (ON:86±15)	OFF:135±5 (ON:86±15)	OFF:145±5 (ON:94±15)	OFF:145±5 (ON:94±15)	OFF:145±5 (ON:94±15)
	Drain pump thermal fuse	°C	169	169	169	169	169	169	169	169	169
FXMQ~MAVE	PC board fuse		—	—	—	250V 10A	250V 10A	250V 10A	250V 10A	250V 10A	250V 10A
	Fan motor thermal fuse	°C	—	—	—	—	—	—	—	—	—
	Fan motor thermal protector	°C	—	—	—	OFF:135±8 (ON:87±15)	OFF:135±8 (ON:87±15)	OFF:135±8 (ON:87±15)	OFF:135±8 (ON:87±15)	OFF:135±8 (ON:87±15)	OFF:135±8 (ON:87±15)
FXHQ~MVE	PC board fuse		—	—	250V 5A	—	—	250V 5A	—	250V 5A	—
	Fan motor thermal fuse	°C	—	—	—	—	—	—	—	—	—
	Fan motor thermal protector	°C	—	—	OFF:130±5 ON:80±20	—	—	OFF:130±5 ON:80±20	—	OFF:130±5 ON:80±20	—
FXAQ~MAVE	PC board fuse		250V 3A	250V 3A	250V 3A	250V 3A	250V 3A	250V 3A	—	—	—
	Fan motor thermal fuse	°C	—	—	—	—	—	—	—	—	—
	Fan motor thermal protector	°C	—	—	—	—	—	—	—	—	—
FXLQ~MAVE	PC board fuse		250V 10A	250V 10A	250V 10A	250V 10A	250V 10A	250V 10A	—	—	—
	Fan motor thermal protector	°C	OFF:135±10 ON:120 or less	OFF:135±10 ON:120 or less	OFF:135±10 ON:120 or less	OFF:135±10 ON:120 or less	OFF:135±10 ON:120 or less	OFF:135±10 ON:120 or less	—	—	—
FXNQ~MAVE	PC board fuse		250V 10A	250V 10A	250V 10A	250V 10A	250V 10A	250V 10A	—	—	—
	Fan motor thermal protector	°C	OFF:135±10 ON:120 or less	OFF:135±10 ON:120 or less	OFF:135±10 ON:120 or less	OFF:135±10 ON:120 or less	OFF:135±10 ON:120 or less	OFF:135±10 ON:120 or less	—	—	—
FXUQ~MAV1	PC board fuse										
	Fan motor thermal protector	°C	—	—	—	—	—	—	OFF:130±5	OFF:130±5	OFF:130±5

Warning

- Daikin Industries, Ltd.'s products are manufactured for export to numerous countries throughout the world. Daikin Industries, Ltd. does not have control over which products are exported to and used in a particular country. Prior to purchase, please therefore confirm with your local authorized importer, distributor and/or retailer whether this product conforms to the applicable standards, and is suitable for use, in the region where the product will be used. This statement does not purport to exclude, restrict or modify the application of any local legislation.
- Ask a qualified installer or contractor to install this product. Do not try to install the product yourself. Improper installation can result in water or refrigerant leakage, electrical shock, fire or explosion.
- Use only those parts and accessories supplied or specified by Daikin. Ask a qualified installer or contractor to install those parts and accessories. Use of unauthorized parts and accessories or improper installation of parts and accessories can result in water or refrigerant leakage, electrical shock, fire or explosion.
- Read the User's Manual carefully before using this product. The User's Manual provides important safety instructions and warnings. Be sure to follow these instructions and warnings.

If you have any inquiries, please contact your local importer, distributor and/or retailer.

Cautions on product corrosion

1. Air conditioners should not be installed in areas where corrosive gases, such as acid gas or alkaline gas, are produced.
2. If the outdoor unit is to be installed close to the sea shore, direct exposure to the sea breeze should be avoided.

JMI-0107

JQA-1452

About ISO9001

ISO 9001 is a plant certification system defined by the International Organization for Standardization (ISO) relating to quality assurance. ISO 9001 certification covers quality assurance aspects related to the "design, development, manufacture, installation, and supplementary service" of products manufactured at the plant.

EC99J2044

JQA-E-90108

About ISO 14001

ISO 14001 is the standard defined by the International Organization for Standardization (ISO) relating to environmental management systems. Our group has been acknowledged by an internationally accredited compliance organisation as having an appropriate programme of environmental protection procedures and activities to meet the requirements of ISO 14001.

Dealer

DAIKIN INDUSTRIES, LTD.
Head Office:
Umeda Center Bldg., 2-4-12, Nakazaki-Nishi,
Kita-ku, Osaka, 530-8323 Japan

Tokyo Office:
JR Shinagawa East Bldg., 2-18-1, Konan,
Minato-ku, Tokyo, 108-0075 Japan

http://www.daikin.com/global/

©All rights reserved

• Specifications, designs and other content appearing in this brochure are current as of July 2006 but subject to change without notice.

This book is made of recycled paper.

ED34-635
Printed in Japan 07/2006 K AK.FS